Sept. 1, 1953 L. S. SORENSEN 2,650,664

OIL TOOL

Filed April 23, 1951 3 Sheets-Sheet 1

Fig. 1

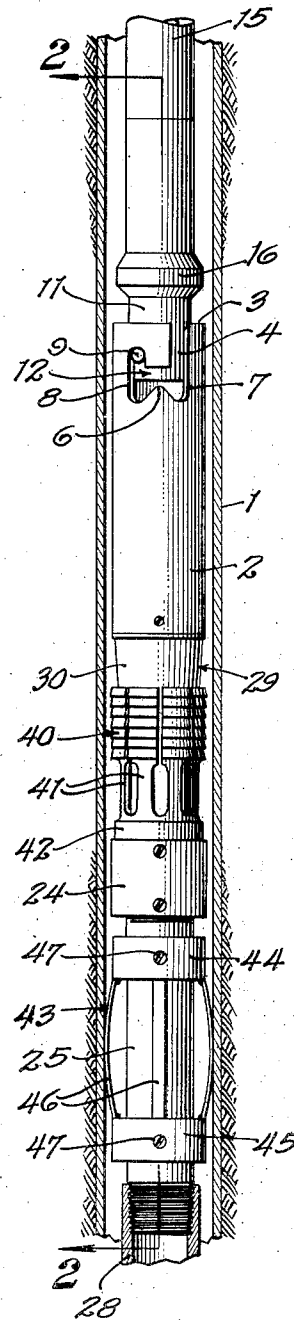

Fig. 2

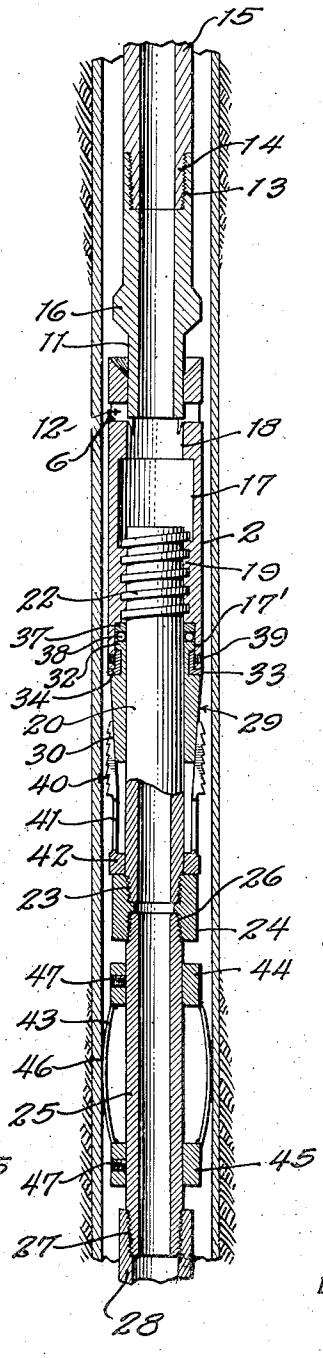

Fig. 3

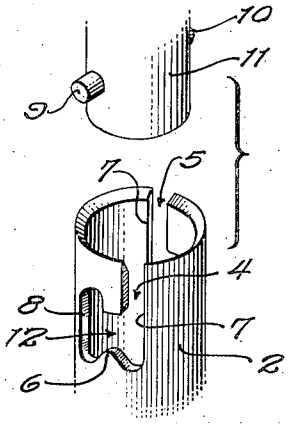

Fig. 4

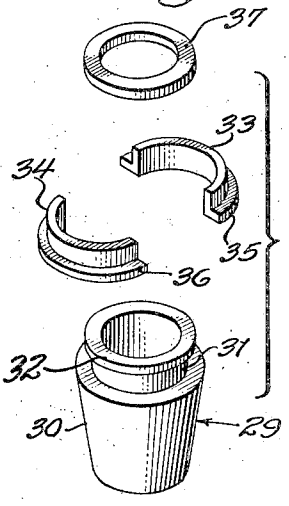

INVENTOR,
LEE S. SORENSEN
BY J. Calvin Brown
ATTORNEY.

Sept. 1, 1953 L. S. SORENSEN 2,650,664

OIL TOOL

Filed April 23, 1951 3 Sheets-Sheet 2

Fig. 5

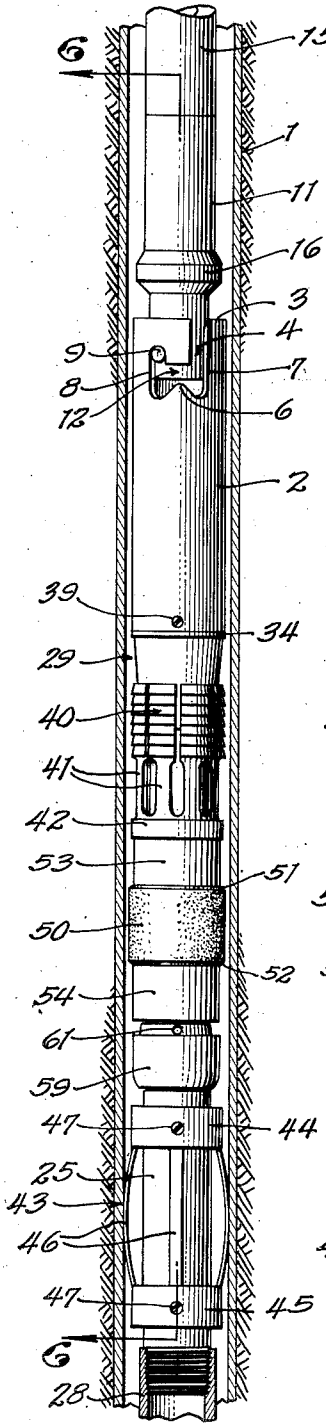

Fig. 6

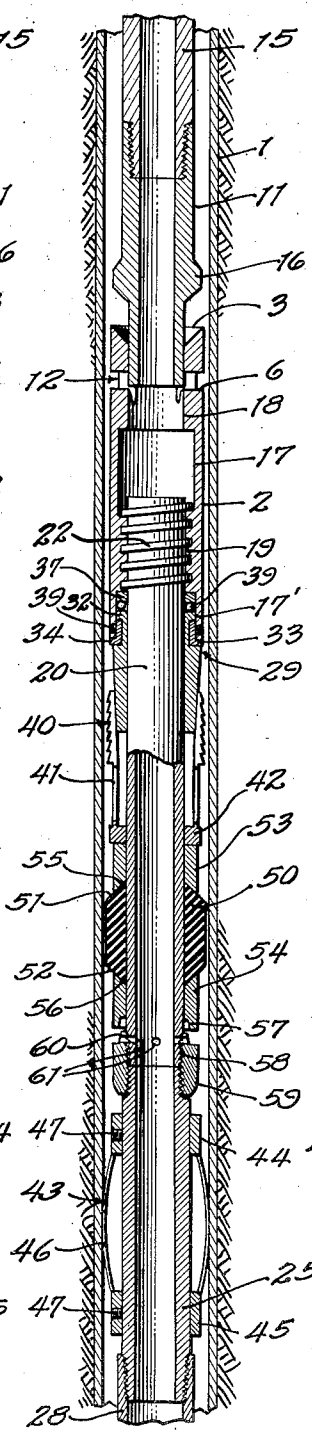

Fig. 7

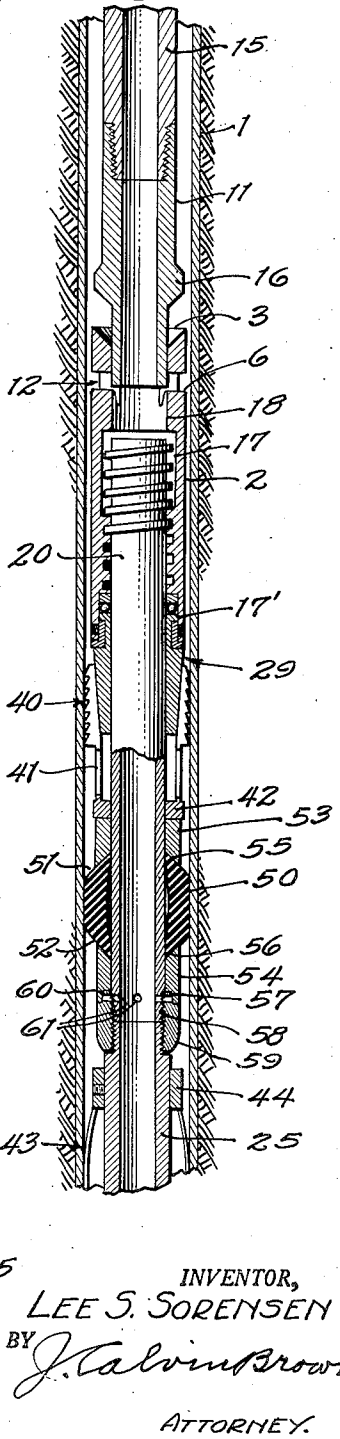

INVENTOR,
LEE S. SORENSEN
BY J. Calvin Brown
ATTORNEY.

Sept. 1, 1953 L. S. SORENSEN 2,650,664

OIL TOOL

Filed April 23, 1951 3 Sheets-Sheet 3

Fig. 8

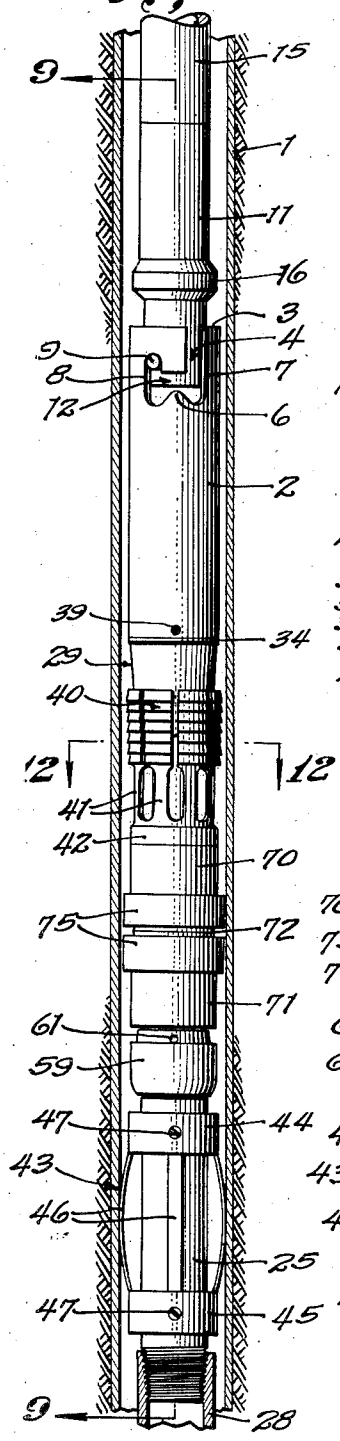

Fig. 9

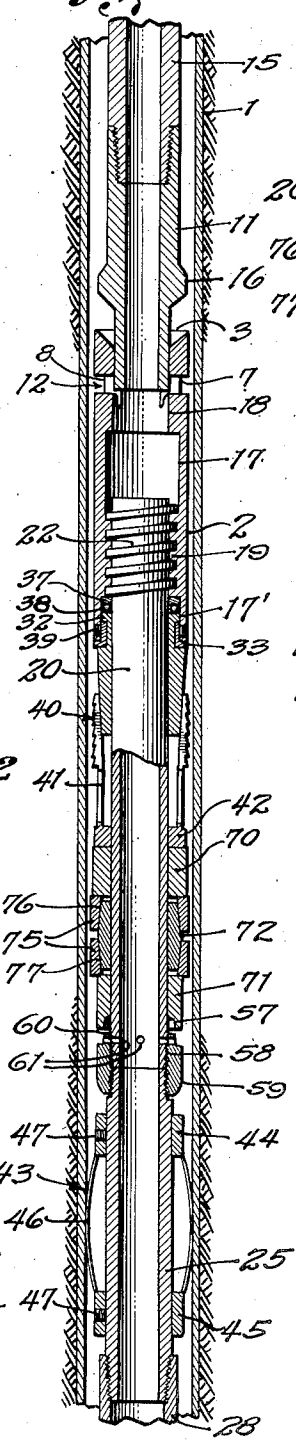

Fig. 10

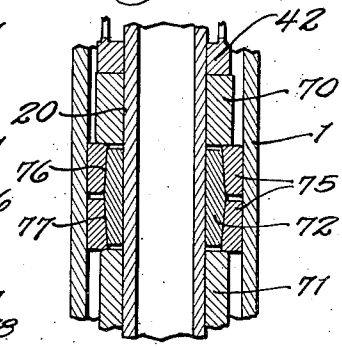

Fig. 11

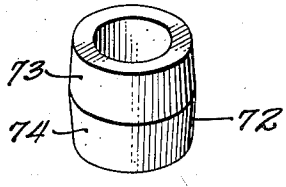

Fig. 12

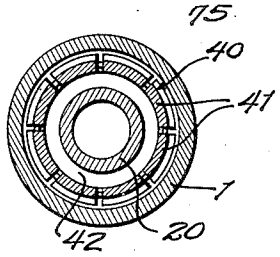

INVENTOR.
LEE S. SORENSEN
BY J. Calvin Brown
ATTORNEY.

Patented Sept. 1, 1953

2,650,664

UNITED STATES PATENT OFFICE

2,650,664

OIL TOOL

Lee S. Sorensen, Long Beach, Calif.

Application April 23, 1951, Serial No. 222,482

5 Claims. (Cl. 166—12)

1

The present invention relates to oil tools generally and specifically to a liner hanger.

Liner hangers are utilized in oil wells for the purpose of suspending tubing within a liner and to hold tubing from engagement with the bottom of the well hole as well as for other purposes.

An object of the present invention is to provide a liner hanger which when secured within the liner will not be movable in either direction. Thus, the present hanger will not pull in either direction in the liner or casing when certain elements thereof have been tightened.

A further object is the provision in a liner hanger of a single set of slips for engagement with the liner and which slips, when engaging the liner, will prevent the hanger from moving in either direction.

A further object is to provide a liner hanger in which definite indication of the location of the hanger within the liner may be ascertained.

A further object is the provision of a liner hanger which will not heave when excessive gas pressure is encountered within the well.

A further object is to provide a liner hanger construction which may be readily packed and in which full width of annular packing may be utilized.

Further objects include a liner hanger of improved construction, easily operated to set the same within a liner and lock the same in position, inexpensive in cost of manufacture, of few parts, and generally superior to liner hangers now known to the inventor.

With the above mentioned and other objects in view, the invention consists in the novel and useful provision, formation, construction, association, and relative arrangement of parts, members and features, all as shown in certain embodiments in the accompanying drawings, described generally, and more particularly pointed out in the claims.

In the drawings:

Figure 1 is an elevation of one form of liner hanger embodying my invention and shown positioned within a liner with tubing secured to both ends of said hanger,

Figure 2 is a sectional view on the line 2—2 of Figure 1,

Figure 3 is a fragmentary separated view of means for securing tubing to the liner hanger,

Figure 4 is a separated view of a head utilized for actuating slips in the liner hanger construction,

Figure 5 is an elevation of a modified form of liner hanger shown within a liner,

2

Figure 6 is a sectional view on the line 6—6 of Figure 5, detailing the packing and circulating elements thereof,

Figure 7 is a vertical sectional view showing the parts in changed relation from that of Figure 6,

Figure 8 is an elevation of a further modified form of circulation liner hanger,

Figure 9 is a sectional view on the line 9—9 of Figure 8,

Figure 10 is a vertical sectional view on an enlarged scale of packing elements for that form of the invention shown in Figures 8 and 9,

Figure 11 is a perspective view of a spool used with the packing elements shown in Figure 10, and,

Figure 12 is a sectional view on an enlarged scale on the line 12—12 of Figure 8.

Referring now with particularity to the drawings and specifically to Figures 1 to 4 inclusive, the liner hanger is shown in Figure 1 in the act of being lowered within a liner 1. The hanger includes a sleeve 2 formed inwardly from one end 3 with a pair of diametrically disposed bayonet slots indicated as an entirety at 4 and 5 (see Figure 3), each bayonet slot varying from the usual construction by the provision of a raised portion 6, which raised portion lies between the vertical slotted portions 7 and 8. Thus, when the liner hanger is being lowered within a liner, the diametrically positioned pins 9 and 10 of the setting tool 11 lie within the slots 8 and to release said pins, the pins pass from the slots 8 into the slots 7 and in so doing move over the raised portions 6 in the transverse slots 12 interconnecting slots 7 and 8. This causes a "bump" which is immediately communicated to the surface of the well and acts as an indication of position of the hanger within the liner, inasmuch as the well operator knows the length of tubing lowered within the casing. The setting tool 11 constitutes a tube provided with a threaded box 13 for engagement with the threaded pin 14 of tubing 15, and said tube may be provided with an annular flange 16.

The sleeve 2 is counterbored at 17, the counterbore communicating with bore 18 which has a diameter slightly greater than the diameter of the lower portion of the setting tool 11. The sleeve 2 is internally screw-threaded at 19, the screw threads 19 being interposed between the counterbore 17 and a further counterbore at 17', the counterbore 17' being of greater diameter than the diameter of the counterbore 17.

A mandrel 20 has one end thereof provided with screw threads 22 which are adapted to engage the

threads 19. This mandrel is tubular in form, and externally screw threaded at 23 for connection with a coupling 24, the said coupling in turn securing a tube 25, the tube 25 being externally threaded at both ends as shown at 26 and 27, the end 27 being threaded to tubing 28 which is being lowered within the well or being held by the liner hanger in a fixed position within the liner.

A swivel head 29 is externally positioned on the mandrel 20, the said swivel head having a tapered periphery 30, with the end of greatest diameter topped by a reduced diameter portion 31 and with a flange 32, thus providing an annular groove. Adapted for placement within the annular groove or that portion between the top having the greatest diameter and the flange 32 are a pair of split bushings 33 and 34, the bushings being flanged as shown at 35 and 36. The bushings fit within the annular groove with the flanged portions lying against the top of greatest diameter of the swivel head. An annulus 37 acts as a bearing and is positioned within the counterbore 17', as is likewise the part 32, and interposed between parts 32 and 37 are ball bearings 38. Set screws 39 are passed through the sleeve 2 and engage the split bushings 33 and 34, as shown in Figure 2, for locking the head to the sleeve. However, the construction is such, due to the presence of the bushings and the ball bearings, that the swivel head may rotate on the periphery of the mandrel 20.

I provide a series of slips arranged in annular formation, as shown at 40, for slide movement upon the head 29. These slips are provided with the usual teeth and are interconnected by means of arms 41 extending from a collar 42, the collar surrounding the mandrel. The inner faces of said slips are inclined relative to the axis of the mandrel and said faces slide upon the head 29 to the end that the slips may be urged outwardly when the head is moved downwardly to force the teeth of said slips into engagement with the liner.

Carried on the tube 25 is a leaf member 43, which member includes a pair of spaced apart collars 44 and 45 slidable upon said tube, with bowed leaf springs 46 spacedly carried between said collars. The collars are provided with set screws 47 whereby the collars may be located in a definite position on said tube 25.

The form of liner hanger shown in the figures just described is of the non-circulating type. However it is often necessary to remove mud and other debris from beneath the hanger and to accomplish this hangers of the type depicted in the remaining figures may be utilized, and wherein fresh water may be circulated to clean the liner and other parts. Where possible the same reference characters will be applied to the forms of the invention shown in the remaining figures. Thus in the form of the invention shown in Figures 5 to 7 inclusive we have, as before, the tube 11 provided with pins 9 and 10 which enter or are released from the bayonet slots 4 and 5 in the sleeve 2. This sleeve is provided with the same type of counterbores 17 and 17' with the bore 18 of slightly greater diameter than the diameter of one end of the tube 11 and is likewise provided with the same arrangement of swivel head 29 carried on mandrel 20. However, in the present instance the mandrel 20 is of greater length than the mandrel shown in Figure 2. Carried on the mandrel 20 is a packer 50. This packer has both ends thereof beveled as shown at 51 and 52 and the said packer is adapted to be interposed between glands 53 and 54 in the form of sleeves carried on the mandrel 20. The said glands have internally beveled ends 55 and 56 which engage the beveled ends of the packer while the upper end of gland 53 is plane and engages the outer surface of collar 42. Gland 54 is provided with a tapered counterbore 57. The pin end 58 of the mandrel 20 is secured to a coupling 59, which coupling is provided with a reduced diameter tapered annular flange 60 which may, in one position, enter the tapered counterbore 57 of gland 54. Coupling 59 secures a tube such as 25. Surrounding the tube 25 is the leaf spring member 43. The mandrel 20 in the present form of the invention is provided with transverse bores 61 adjacent the pin end thereof and these bores communicate with transverse bores in the flange 60 of the coupling 59, hence when the tool is in the position shown in Figure 6 the bores are open to afford passage for a liquid therethrough and outwardly between the coupling 59 and the gland 54. However, in a second position of the tool as illustrated in Figure 7 the flange 60 is received within the counterbore 57 and fluid passage through said bores 61 is closed.

The form of the invention illustrated in Figures 8 to 12 inclusive is quite similar to that just described for Figures 5 to 7 inclusive, the difference residing in the type of packer. Thus the same reference numbers will apply with the exception of the sleeve 70 which is carried upon the mandrel 20 and engages the collar 42. In the present instance the gland which is shown at 54 in Figure 6 is provided with a flat top in place of the bevel, the gland in the present instance being indicated as 71, the construction otherwise remaining the same so far as the circulating type of coupling is concerned. Interposed between sleeve 70 which is in reality a gland and gland 71 is a spool 72 of the form shown in Figure 11, the spool having oppositely tapered peripheral portions 73 and 74, the said spool being carried on the mandrel 20. Engaging the tapered portions 73 and 74 is a lead or other soft metal packing 75, said packing being in the form of upper and lower segments, the inner surfaces being tapered with respect to the outer surfaces, as shown for instance at 76 and 77. Furthermore the upper and lower segments of the packing extend beyond the ends of the spool 72 for engagement between the glands 70 and 71. Thus if the glands are moved so as to diminish the distance therebetween the lead packing is moved upon the tapered surfaces of the spool to force the packing into tight engagement with the inner surface of the liner, and in the manner shown in Figure 10. This construction provides for what is termed full diameter of the packing and affords a very effective seal against passage of liquid or gas past said packing.

The operation, uses and advantages of the several forms of the invention just described are as follows:

Taking first that form of the invention shown in Figures 1 to 4 inclusive, the liner hanger is lowered within the liner by means of the tubing 15, the setting tool having its pins 9 and 10 positioned within the slots 8 of the bayonet slots 4 and 5. The operator has previously determined the depth to which the liner hanger and its associated tubing such as shown at 28 is to be lowered and positioned, and assuming that a given depth within the liner has been reached, the operator then rotates the tubing 15 in a direction that causes the mandrel threads to screw within the

counterbore 17. In so doing the slips will move on the tapered surface of the spool 29 and bring the teeth of the said slips into engagement with the inner surface of the liner to secure the liner hanger thereto. Such movement of the mandrel within the sleeves 17 is possible for the reason that the bowed leaf springs 46 have frictional engagement with the inner surface of the liner and the collars 44 and 45 are held by means of set screws 47 to the tube adapter 25, thus rotation of tube 15 will cause travel of the mandrel within the sleeve 2. However the head 29 will swivel or rotate upon the mandrel for the reason that the split bushings are held by set screws 39 to the sleeve 2 and likewise due to the presence of the roller bearings 38 between the sleeve and the member 29. Thus as the slips move upon the swivel head, no rotation of the swivel head and the slips will occur during rotation of the sleeve 2 and movement of the mandrel. Having locked the liner hanger to the liner the operator will then lower the tubing 15, which lowers the tube 11 and by counter rotation of the tube 15 the pins 9 and 10 will pass through the transverse slot between the slots 7 and 8, the pins traveling over the surface of the raised portion 6, which in so doing will raise the tubing slightly and give an indication to the operator at the surface of the well that said pins are now positioned within the slots 7, to permit withdrawal of the tubing 15 and the setting tool 11.

That form of the invention shown in Figures 5 and 7 differs from that form just described in the use of a packer to permit circulation of clear water to wash away any mud which may surround the liner hanger and within the liner. Thus upon lowering the liner hanger to a defined position within the liner the mandrel may be turned to cause the threads thereof to travel within the sleeve 2, as for instance shown in Figure 7, to bring the slips into engagement with the inner surface of said liner and in so doing the glands 53 and 54 will compress the packer 50 therebetween to force the said packer into engagement with the liner as shown. In the position of the parts shown in Figure 6, the flange 60 is spaced from the gland 54 and there is no obstruction to passage of liquid through the bores 61. Thus water may be passed downwardly through the tubing 15 for passage through the tubing 28. However, if an obstruction is encountered, this water is passed through the circulation bores 61 and outwardly of the liner hanger to wash away mud, after which the slips may be brought into engagement with the hanger to compress the packing and segregate the area between the liner and the tubing 28.

That form of the invention shown in Figures 8 to 12, as previously stated, varies from the form shown in Figures 5 to 7, in the use of a metal packing and wherein the packing has an uniform external diameter, together with a taper sided spool upon which the tapered inner surface of the packing moves to force said packing into tight engagement with the inner surface of the liner and the tapered outer surface of the spool when the glands 70 and 71 approach to compress the said packing. This form of the invention assures that the well is packed off above and below the liner hanger. However full diameter of the packing is utilized in the present form.

I claim:

1. A liner hanger including a sleeve internally provided with screw threads, a mandrel provided with screw threads for engagement with the threads of the sleeve to cause relative axial movement between the sleeve and the mandrel when one of said members is rotated, a head, provided with a tapered side wall, carried on the periphery of said mandrel, said head formed with an annular groove, a split bushing within said annular groove and means carried by the said sleeve and engaging said bushing for securing the head to said sleeve for relative rotation; an annular series of segmental slips, each slip provided with an arm and a collar surrounding the mandrel and carrying the slip arms, said slips adapted to engage the said head, relative movement in one direction between the sleeve and the mandrel expanding the said slips.

2. A liner hanger including a setting tool, a sleeve and means between the setting tool and sleeve effecting detachable engagement therebetween, said sleeve provided with an internal screw threaded portion, a mandrel having a threaded portion for engagement with the threaded portion of the sleeve, a swivel head carried on the mandrel and rotatably secured to one end of the sleeve, slips carried on the periphery of the mandrel and engaging the head, relative movement between the sleeve and mandrel upon turning the sleeve relative to the mandrel causing the swivel head to expand the slips; an annular packer carried on the periphery of the mandrel, glands on both sides of said packer and movably carried on the periphery of the mandrel, means between the slips and one of said glands to hold the gland against movement when the slips are expanded, and a coupling carried on the mandrel and engaging the other gland to move the gland when relative movement occurs between the mandrel and sleeve, said other gland formed at one end with a counterbore, and the said coupling formed with circulation bores, said mandrel formed with circulation bores registering with the circulation bores of the coupling, the said circulation bores being closed upon reception of the coupling within the counterbore of said gland.

3. The device as set forth in claim 1 characterized in that an annular packer is carried on the said mandrel, there being glands movably carried on said mandrel on both sides of said packer, one gland engaging the slip arm collar, and fixed means on the mandrel engaging the other gland, said glands compressing the packer between the slip arm collar and the fixed means on the mandrel upon relative movement between the mandrel and the sleeve in one direction.

4. The device as set forth in claim 1 characterized in that a spool is carried on the periphery of the mandrel, segmental metal packing positioned on the periphery of said spool, glands movably carried on said mandrel on both sides of said spool and engaging said segmental metal packing, one gland engaging the slip arm collar and fixed means on the mandrel engaging the other gland, said glands adapted to engage the packing to compress the same between the slip arm collar and the fixed means on the mandrel upon relative movement between the mandrel and the sleeve in one direction.

5. The device as set forth in claim 1, characterized in that a spool having a tapered side wall is carried on the periphery of the mandrel, segmental annular series of packing positioned

on the periphery of said spool, glands movably carried on said mandrel on both sides of said spool and engaging said segmental annular series of packing, one gland engaging the slip arm collar and fixed means on the mandrel engaging the other gland, said glands adapted to engage the packing to compress the same between the slip arm collar and the fixed means on the mandrel upon relative movement between the mandrel and the sleeve in one direction.

LEE S. SORENSEN.

References Cited in the file of this patent

UNITED STATES PATENTS

Number	Name	Date
1,303,091	Mack	May 6, 1919
1,785,276	Mack	Dec. 16, 1930
1,860,268	Stewart	May 24, 1932
2,160,804	Hall et al.	May 30, 1939
2,201,433	Ford	May 21, 1940
2,532,418	Page	Dec. 5, 1950
2,534,528	Page	Dec. 19, 1950