US00D412899S

United States Patent [19]

Rosen

[11] Patent Number: Des. 412,899

[45] Date of Patent: ** Aug. 17, 1999

[54] **DEPLOYABLE DISPLAY**

[75] Inventor: **John B. Rosen**, Eugene, Oreg.

[73] Assignee: **Rosen Products LLC**, Eugene, Oreg.

[**] Term: **14 Years**

[21] Appl. No.: **29/083,849**

[22] Filed: **Feb. 18, 1998**

[51] **LOC (6) Cl.** **14-03**

[52] **U.S. Cl.** **D14/132**; D14/126; D14/113

[58] **Field of Search** D14/113, 126–134; D19/60; 312/7.2; 248/917–924; 348/825, 827, 836, 837

[56] **References Cited**

U.S. PATENT DOCUMENTS

D. 340,235	10/1993	Robak et al. .	
D. 360,126	7/1995	Rosen .	
D. 367,477	2/1996	Rosen .	
D. 370,922	6/1996	Onoda et al.	D14/113 X
3,291,432	12/1966	Lucasey .	
3,358,957	12/1967	Lindenmuth .	
4,438,458	3/1984	Munscher .	
4,455,008	6/1984	MacKew .	
4,620,808	11/1986	Kurtin et al. .	
4,691,886	9/1987	Wendling et al. .	
4,706,919	11/1987	Soberalski et al. .	
4,768,744	9/1988	Leeds et al. .	
4,836,486	6/1989	Vossoughi et al. .	
4,982,996	1/1991	Vottero-Fin et al. .	
5,076,524	12/1991	Reh et al. .	
5,107,402	4/1992	Malgouires .	
5,177,616	1/1993	Riday .	
5,179,447	1/1993	Lain .	
5,195,709	3/1993	Yasushi .	
5,222,780	6/1993	Reh et al. .	
5,271,590	12/1993	Rosen .	
5,311,302	5/1994	Berry et al. .	
5,374,104	12/1994	Moore et al. .	
5,547,248	8/1996	Marechal .	

FOREIGN PATENT DOCUMENTS

PCT/JP90/00180	2/1990	WIPO .

Primary Examiner—Ted Shooman
Assistant Examiner—Richelle Shelton
Attorney, Agent, or Firm—Kolisch, Hartwell, Dickinson, McCormack & Heuser

[57] **CLAIM**

The ornamental design for a deployable display, as shown and described.

DESCRIPTION

FIG. **1** is an isometric view of a deployable display constructed in accordance with the present invention;

FIG. **2** is a front view of the deployable display shown in FIG. **1**, a cavity for receipt of the display being shown in dashed lines as environment and forming no part of the claimed design;

FIG. **3** is a left-side view of the deployable display shown in FIG. **1**;

FIG. **4** is a right-side view thereof;

FIG. **5** is a bottom view thereof;

FIG. **6** is a top view thereof; and,

FIG. **7** is a rear view of the deployable display shown in FIG. **1**, the cavity for receipt of the display being shown in dashed lines as environment and forming no part of the claimed design.

1 Claim, 2 Drawing Sheets

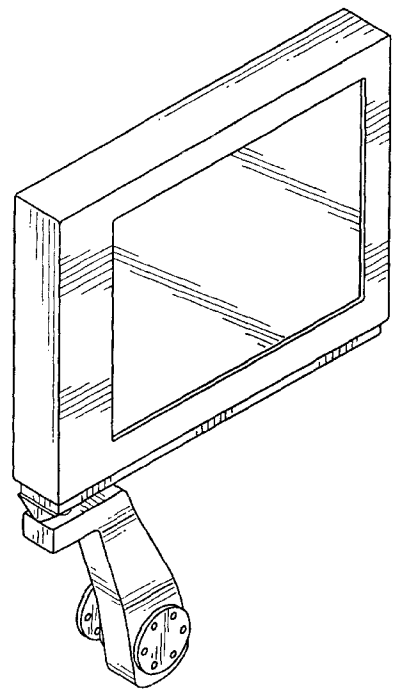

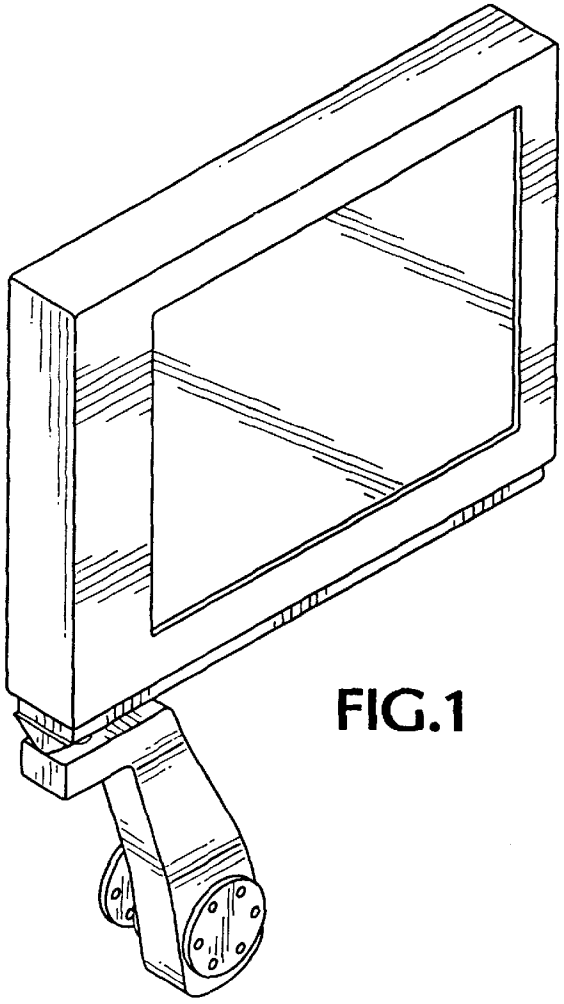

FIG.1

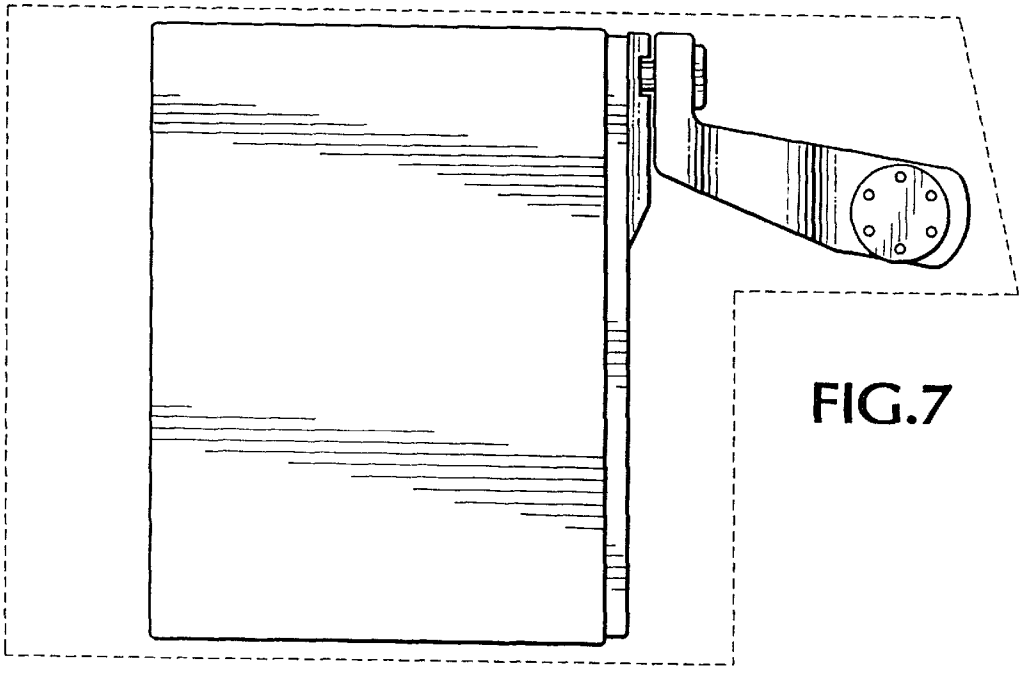

FIG.7

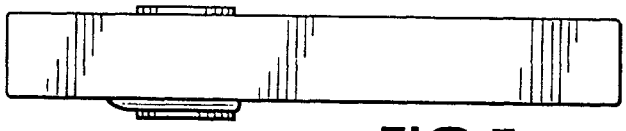

FIG.5



FIG.6

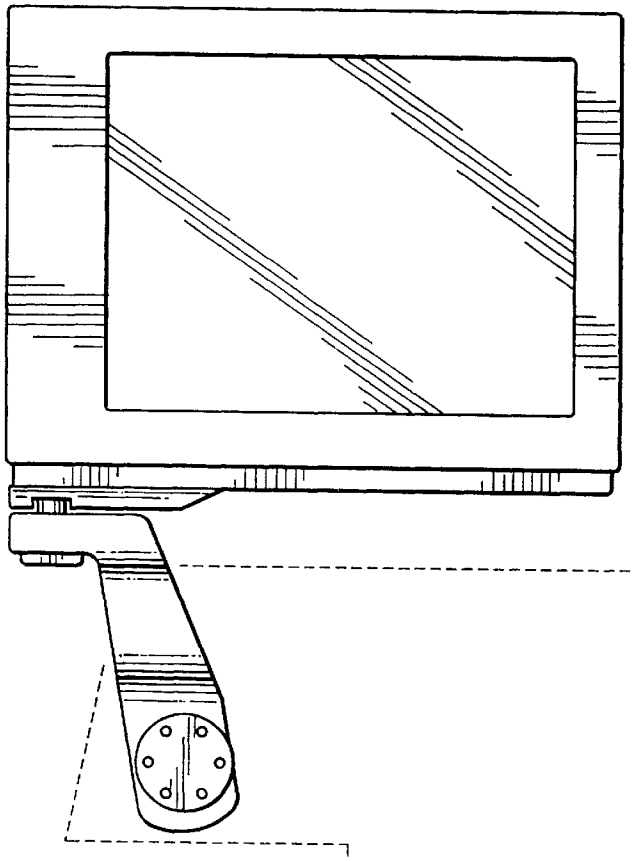

FIG.2

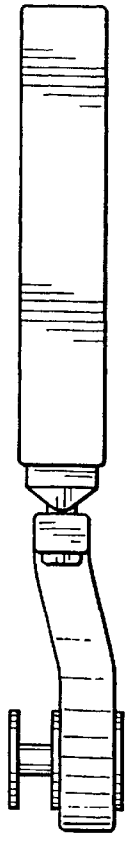

FIG.3

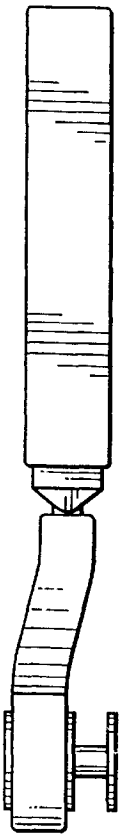

FIG.4