Oct. 19, 1954 O. BROWN 2,692,121

BURDEN-SWITCHING APPARATUS AND METHOD

Filed Nov. 1, 1946 2 Sheets-Sheet 1

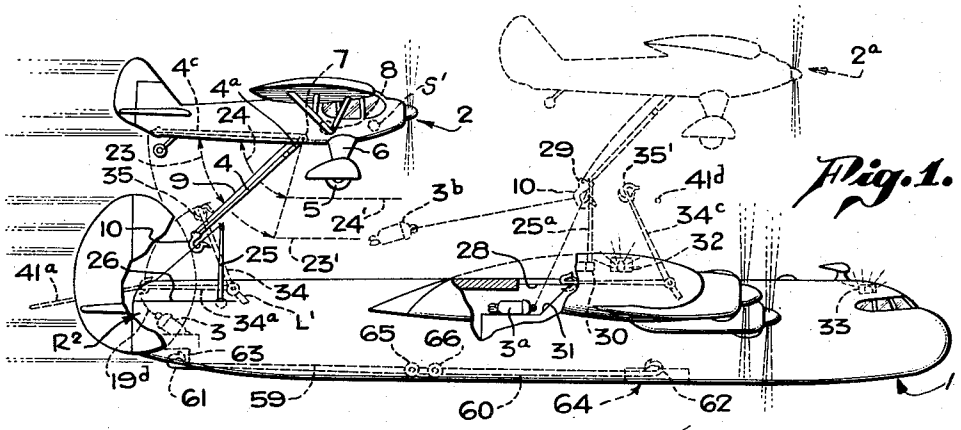

Fig. 1.

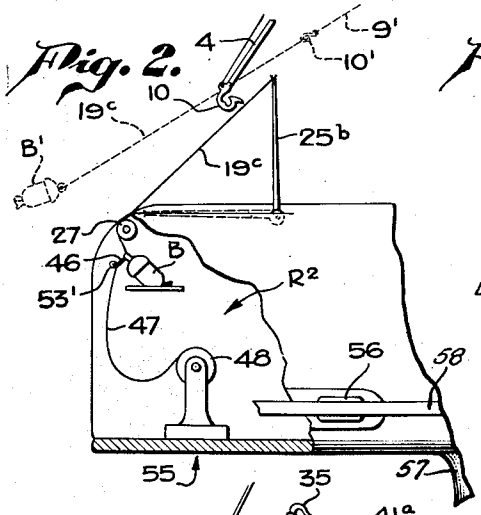

Fig. 2.

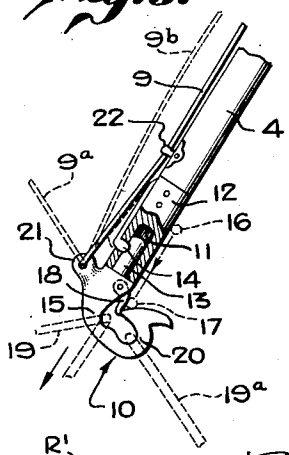

Fig. 3.

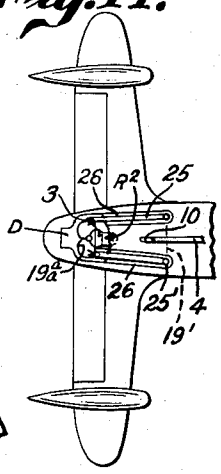

Fig. 11.

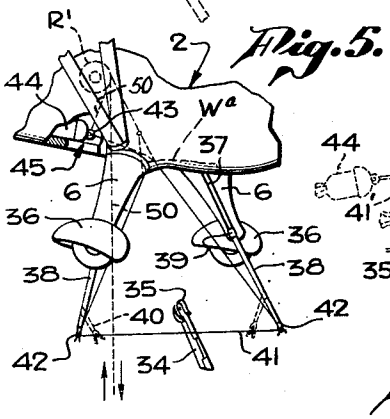

Fig. 5.

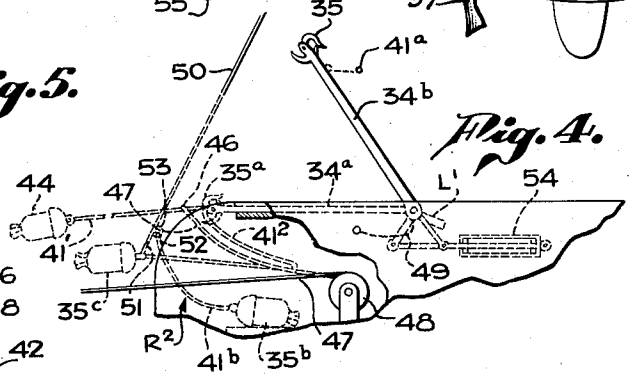

Fig. 4.

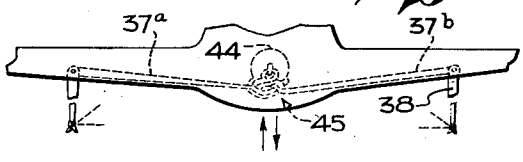

Fig. 6.

INVENTOR.

Oct. 19, 1954 O. BROWN 2,692,121

BURDEN-SWITCHING APPARATUS AND METHOD

Filed Nov. 1, 1946 2 Sheets-Sheet 2

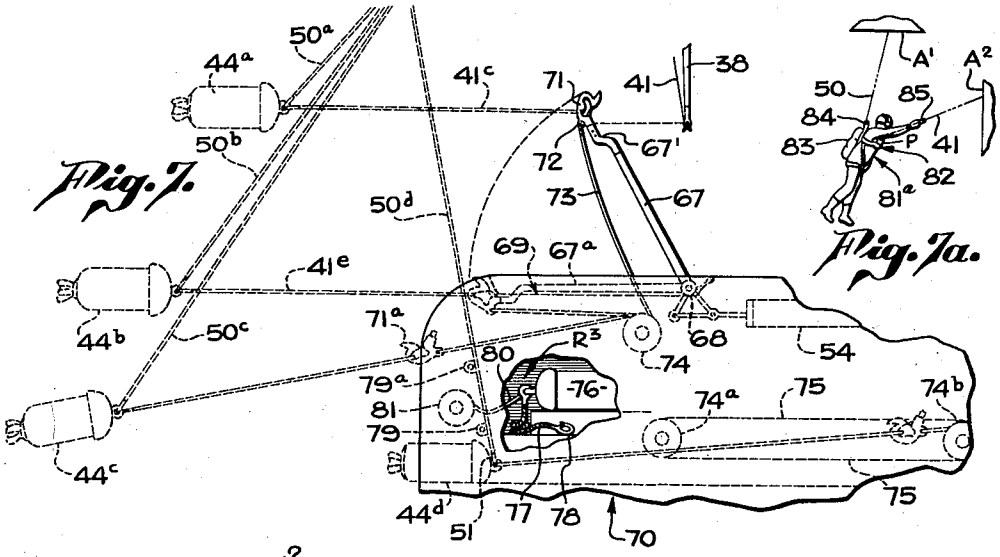

Fig. 7.

Fig. 7a.

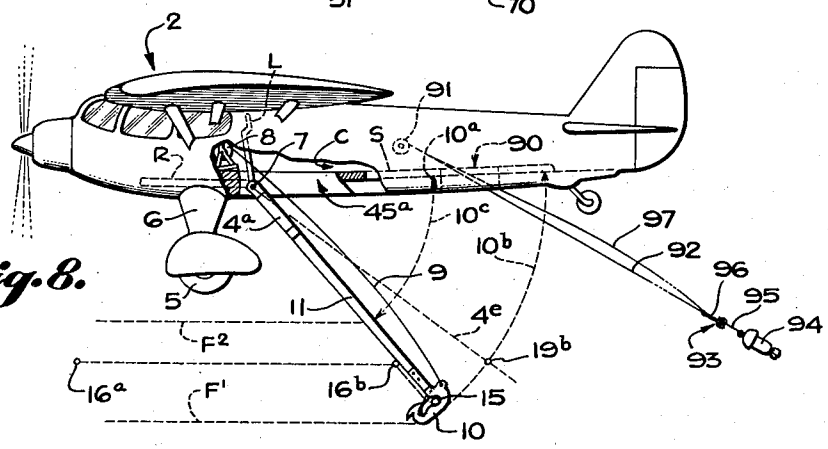

Fig. 8.

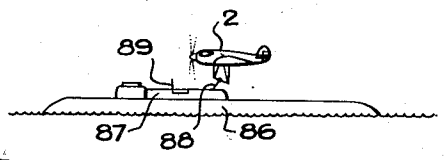

Fig. 10.

Fig. 9.

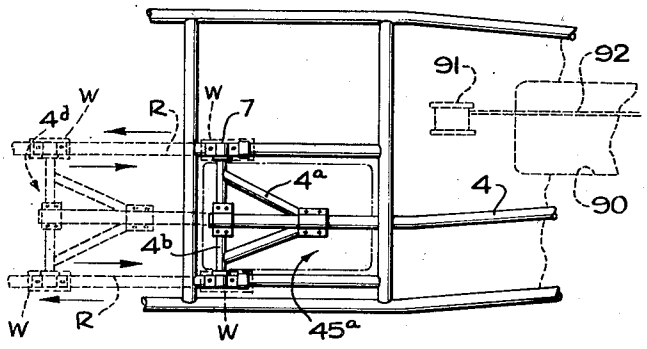

INVENTOR.

Patented Oct. 19, 1954

2,692,121

UNITED STATES PATENT OFFICE

2,692,121

BURDEN-SWITCHING APPARATUS AND METHOD

Owen Brown, Los Angeles, Calif.

Application November 1, 1946, Serial No. 707,151

11 Claims. (Cl. 258—1.8)

1

This invention relates to transportation—especially to airborne and surface carriers, including coactive relations therebetween—and comprises novel means and methods applicable thereto.

More specifically, it introduces improved apparatus for both the so-called "pickup" and the so-called "delivery" of burdens—such as mail pouches, canisters, human beings, and articles of sundry other adaptable types—from one rapidly traveling body to another by means of both inboard and outboard tackle components carried by the respective bodies.

For illustration, it introduces means for switching burdens of various kinds and sizes from one aircraft to another while in flight. For another typical example, it may be employed in a somewhat comparable manner for transferring such burdens from an airborne craft to a railborne or similar vehicle at relative speeds preferably, but not necessarily, approximating co-velocities therebetween.

Therefore, the invention is to be regarded as a concurrent extension of the art disclosed in my co-entered application entitled Intercooperative System for Airborne and Surface Carriers, Serial No. 707,153 of 1946, now Patent No. 2,639,107, wherein I provide entirely new rollable devices, capable of attaining and of consistently maintaining at least moderately high airplane speeds. And since said other named application deals quite fully with means and methods for aerially switching one or more towable gliders from one locomotive plane to another as well as from a locomotive plane to a railborne tow-car and vice versa, the present embodiments are explained only with respect to said first-named generality of burdens rather than to glider operations, notwithstanding that certain of the apparatus features herein may be employed in glider-towing and glider-switching services as well. It is obvious, moreover, that the apparatus and the methods are applicable to still other fields, including the marine field, as elsewhere mentioned. See also my co-entered application entitled Means for Conducting Blitz Warfare, Including Methods Therewith, filed November 1, 1946, as Serial No. 707,152, now Patent No. 2,634,924.

For some years mail pouches and relatively small parcels have been successfully delivered to and picked up from various ground stations by airborne light planes, having thereon extensible and retractable booms, including pickup hooks, or grapples, of preferred types and other complementary snatch-tackle, inclusive of automatic delayed-action winches and burden-lines cooperable therewith. Such apparatus is well known

2

and need not be further detailed. The same has been limited, however, to operations wherein only one carrier is employed for each engagement (the earth, as a movable body, not being considered as another carrier in the meaning and intent of the invention) and wherein such one carrier, flying at pickup speeds which may normally exceed 100 miles per hour, must necessarily make a large daily number of surface contacts over each route which is flown. Because, in order to carry on profitable operations, the pickup planes are of very small inexpensive sizes, having extremely limited individual cargo capacities, the operations of such a system per se, however widespread and financially successful it may be, is obviously and necessarily quite circumscribed.

In short, the class of equipment currently employed, and the techniques used therewith, have heretofore excluded its economical application on long-range, heavy-duty schedules. Moreover, it would be even more uneconomical to utilize large airliners, of the Constellation class, for example, in ordinary local pickup and delivery services. But according to one embodiment of my invention, both general classes of carriers may be utilized cooperatively, each entirely within its own sphere of efficiency, wherein the maximum of profitable pay-load may be carried by each type of craft in proportion to the miles flown.

Specifically, large transcontinental type planes, flying regular schedules, may, at very low cost, be fitted with equipment designed to receive large quantities of previously picked-up mail and other freight from light planes adapted to make very brief contacts therewith and at non-stop speeds therebetween, which speeds need be but momentarily less, perhaps, than the regular cruising speeds of the larger craft, as required. Much additional mail and light freight other than picked-up loads could also be fed to the transcontinental carriers in this manner (as more fully explained hereafter) from innumerable off-course points of initial consolidation. And for this special service, feeder planes of any desirable intermediate size could be utilized. Return loads, also, could be handed over non-stop by the big liners to such light planes, for the return flights to said off-route bases. Similarly, railborne vehicles—as hereinafter explained—traveling extensive lengths of trackage, could be contacted in like manner by the light pickup and/or feeder planes, and burdens thereby exchanged back and forth.

However, it is not entirely essential that the

respective bodies shall be traveling at approximate co-velocities since, according to facilities herein disclosed, it would be possible for one of the light pickup or the intermediary feeder planes, for illustration, flying at a speed exceeding 100 miles per hour, to effect pickup and/or delivery contact with the mail and/or baggage car or cars of an existing type of railroad train, the latter traveling at substantially less than 100 miles per hour. Thus the invention may have other uses aside from those briefly and graphically set forth herein, and may be carried out by the employment of various other means and methods aside from those which are specifically shown and explained.

It is a primary object of the invention to extend existing aerial pickup and delivery facilities to include the use of many types and sizes of aircraft. Thus large airborne gliders, as a further illustration, while in the tow of tow-cars or locomotive planes—as more fully dealt with in my said first mentioned co-entered application—could also be adapted for baggage switching with aircraft of existing or future types, such as now or hereafter employed in pickup and delivery duties.

Another object is to provide means whereby a given pickup light plane may cover a predetermined local route according to schedule, and, thereafter, without making any preliminary ground contact, and merely—as desired—coordinating its time table to that of a relatively longer range transport or even a transcontinental airliner, meet said longer ranging plane for pickup and delivery duties prior to making a return flight over the previous or any other predetermined route while still airborne.

Another object, preliminary to the introduction of very-high-speed rail carriers according to my first mentioned co-entered application, is to make possible aerial contacts between existing types of pickup planes and railborne surface vehicles traveling at present railroad train speeds.

In line with the foregoing objects, it is another objective to provide special types of pickup and delivery facilities, as hereafter dealt with, wherewith operations can be carried on with the greatest ease, and economically, wherewith schedules may be maintained punctually, and wherewith the possibility of mishaps can be reduced to a minimum.

Another object is to fill the serious breech which will, ordinarily, be created when existing airliners, driven solely by reciprocating engines, are replaced by much faster craft powered by gas turbine motors or such motors geared to propeller shaftings, making possible the indefinite further use of these outmoded passenger liners in lower speed, so-called "co-velocity" services.

Another object, in time of war, is to provide means whereby important baggage may be quickly, expeditiously transferred from one plane to another while airborne; as, for example, for the emergency delivery of bombs, rockets or other ammunition, first-aid and other medical supplies, important dispatches which are more likely to be intercepted, scrambled and/or decoded if sent by radio, human beings, etc.

Another object is to be able to effect similar contacts at sea between pickup and delivery planes and submersible craft of projected types, capable of high speed surface travel: as, for instance, contacts between such underseas craft and carrier-based feeder planes, and between such planes and any other waterborne craft of

adequate sizes and/or speeds for reciprocal duties. While I do not graphically show all of the different carrier forms for which the invention is adapted, it will be obvious, after the full benefit to be derived from the present disclosures, that only mechanical skill and ordinary engineering techniques would be necessary to hereafter carry out the required adaptations, as circumstance may determine.

Other objects will be apparent from the detailed description hereafter, relative to the drawings, wherein—

Fig. 1 is a side-elevational view of a transcontinental type of airliner, fitted with certain take-over and delivery apparatus, including one well known existing type of light pickup or feeder plane which may be employed cooperably therewith.

Fig. 2 is the partially laid open detail, in side-elevation, of a railborne transfer cab according to the invention, featuring certain inboard and outboard types of burden-transferring apparatus thereon and related thereto.

Fig. 3 shows one preferred kind of transfer hook which may be employed with the feeder plane of Fig. 1, as viewed in side elevation, broken open to show a preferred mode of engagement of the same with certain boom tackle associated therewith.

Fig. 4 is also side-elevational, being the broken open detail of the railborne transfer cab of Fig. 2, for example, wherein other components of burden handling tackle are featured.

Fig. 5, in lineal perspective, is the fragmental view of a feeder plane of special type, showing how burden-transferring tackle thereon may be employed with outboard tackle complementary thereto on either the airliner of Fig. 1 or the transfer cab of Figs. 2 and 4: in the latter view more specifically.

Fig. 6 is the detail of apparatus similar to that shown in Fig. 5, wherein a low-wing plane is depicted in front elevation.

Fig. 7 is a partially schematic, side elevational view (fragmental only) of apparatus wherein is featured burden-switching components slightly differing from those previously shown.

Fig. 7[a] is obviously a human body, appendant from a duality of burden lines, according to a technique applicable thereto.

Fig. 8 is a view of an airplane, in side elevation, having burden-switching tackle comparable to that carried by the upper craft in Fig. 1.

Fig. 9 is the plan detail of a boom suspension which may be employed with the airplane of Fig. 8.

Fig. 10 is the side-elevational representation of an aircraft engaged in a burden-switching operation with a high-speed submarine boat, according to the invention, and

Fig. 11 is a fragmentary plan view of the rear end of plane 1 of Fig. 1, partially broken open to further show the relative positioning of the elements there depicted.

Like reference characters in the drawings indicate parts of like structure and like functions, unless otherwise specifically noted.

Referring to Fig. 1, the long ranging airliner 1 is there seen a brief moment before contact has been made therewith by the light pickup plane 2 for the purpose of snatching from said liner a burden, such as the mail pouch or canister 3 or the burden 3[a], depending upon which of a featured two of the different possible arrangements and procedures is to be adopted.

Plane 2 may also turn over a burden (or burdens) to plane 1, as more fully explained hereinafter. This latter operation, which is conveniently referred to as the burden delivery, may take place either before or after a pickup operation, conveniently called a burden snatch; and since it is desirable that these two distinct operations shall not be confused, the pickup or "snatch" tackle proper and its uses will be described first, relative to both of the preferred options previously mentioned. For the further avoidance of possible confusion, however, it should also be explained that certain elements of the burden-delivering tackle may become components of the burden-receiving tackle and vice-versa, as beneficially employed. Moreover, both general classes of tackle are susceptible to variation, as will be made clear during a perusal of the following description.

Attention is directed initially to the burden-handling apparatus of the pickup plane 2, with especial reference to its so-called snatch-tackle. Such tackle may include elements quite similar to certain facilities provided as standard equipment on present types of pickup planes, such as those flying the routes of All American Aviation, Inc., the pioneer in this field, i. e., except for specified changes and adjustments; which latter can be readily made in accord with the present disclosure. Or, alternatively, those features herein which constitute either broad or specific improvements upon the prior art of burden-handling may be incorporated, by preference, into the modified structures. Hence the boom 4 of plane 2 may be strictly in accord with the drawings herewith, wherein superior results may be had therewith—incorporating, to be sure, certain structural components already standard to the art as elements, only, in my improved devices—or changes may be made according to the particular service demands, some of which are set out herein.

For example, it may be explained that while the structures which I disclose and the techniques applicable thereto bear a recognizable similarly to comparable ground tackle, and to existent pickup tackle and methods auxiliary thereto, the comparison would, in other respects, be entirely inapropos. Thus boom 4 is of a length usually deemed most desirable in relation to the size of the plane itself, with regard to such factors as the height of the pick-up standards commonly used at ground stations, the required clearance between the outboard end of the boom, whereon the pickup hook is secured, and the airplane landing wheels of the fixed outboard type shown, the speed of the plane at the time of the pickup—usually in the neighborhood of 110 M. P. H.—and other considerations. In general, booms of about 15 feet in length have been employed satisfactorily. And if plane 2 is to be used in a dual capacity for both (1) picking up individual burdens from a chain of ground stations and for thereafter (2) delivering these same burdens direct to the liner 1, or a similarly equipped but shorter ranging carrier, as well as for spot pickups and deliveries over a return route, it is obviously advisable to provide a particularly long boom; but not necessarily so unless the wheels 5, associated with the landing gear pants 6, are of this fixed outboard type.

Thus, while the plane shown is of the general class inclusive of such well known light planes as the Stinson Reliant, etc., which class was predominant when pickup services were inaugurated, recent light plane types are of the low-wing description, having fully retracting wheel gear, as exemplified by such light planes as the Globe "Swift." Because of the increased clearances afforded by retractable landing gear, pickup booms could be shortened with regard, largely, to propeller clearances; and single nose-type propellers, also, can be placed to increase lower clearances. (A further factor, as explained hereafter, is the one which relates to replaceable pickup hooks, and to the necessity for provision of means for replacing the hooks at the outboard ends of the booms before each succeeding pickup or snatch operation.)

If, however, and by option, one class of plane is to be employed exclusively for local pickup work, taking off at one terminal airport and eventually landing at another terminal airport, at which latter point the consolidated burdens are then to be transferred to a special—and preferably faster-flying—feeder plane, whose primary function is to take over and deliver said consolidated burdens to plane 1 in exchange for return loads, a much shorter boom may be used to advantage on the feeder plane. These distinctions, and the reasons therefor, will become more apparent after explanations have been given of certain other components associated therewith.

Sundry types of boom suspensions have been devised, among which may be especially mentioned the structure featured in Patent No. 2,373,413 to S. C. Plummer and the one shown in Patent No. 2,373,414 to said Plummer, the former being particularly characterized as pivotally carried adjacent the empennage whereby to return the outboard free end of the boom to a forwardly disposed hatch, which serves both as a burden bay and as a means of ready access to said free end of the boom for recurrent replacements of the snatch-hook. The latter named general type, on the other hand, is swingable from a pivotally mounted axle up forward, adjacent the plane's center of gravity and within the hatchway, the grapple or snatch-hook therefor (of specialized type) being readily replaceable just inboard of the plane, after each operation, for slidable movement through the hatch to the end of the boom along a rearwardly placed track running longitudinally of said boom and adapted to catch and hold the hook releasably at the boom's outboard extremity.

For present explanatory purposes, it will be assumed that the latter described general class of boom, but as herein substantially modified, is to be employed in the version featured in Fig. 1. Thus, briefly, said boom 4, Fig. 1, may have the Y-shaped yoke 4^a adjacent its inboard end, as seen to best advantage in the enlarged views of Figs. 8 and 9; the tip-ends of the Y member being suitably welded or otherwise secured to the aforesaid axle, identified conveniently as 4^b in Fig. 9, substantially as shown. The axle 4^b is carried at right and left inboard sides of a hatchway 45^a, which latter is contiguous the pivot point 7 with the greatest area of the opening to the rear of the pivot. The boom may be operated in any serviceable manner, as by lever L, Fig. 8; and an automatic winch drum 8, Figs. 1 and 8, may be employed in cooperation with the burden-line 9. Line 9, however, is preferably connected to a special type of safety snatch-hook 10, which will now be explained fully with reference to the detail of Fig. 3.

Hook 10 is seen to be telescopically, releasably, socketed within a suitable bore hole 11 or the like of the lower shank 12 of boom 4, although, ob-

viously, variable other means, including less preferable alternatives, of releasably attaching the hook may be employed. (For one example, the boom could have a terminal or neck adapted to be socketed into said hook.) The preferred type of engagement is made possible by providing the neck 13 of reduced diameter, having, in this version, the recessed portion as shown for snap-in action with the spring-latch element 14; the latter being comparable to one well known type of umbrella clip and suitably secured at its outer end portion to shank 12 as indicated. Thus when, and only when, a pull is exerted directly longitudinally of the boom will hook 10 be freed readily from shank 12; thereby affording assurance against the premature displacement of the hook from any other cause. Obviously, the position at which the hook will be freely released from clip 14 is that predetermined angle which will be described immediately after load tension is normally intially applied against the lower jaw of the hook at the cupped area 15, which can be readily determined and allowed for; it being understood that the boom will normally be automatically swung rearwardly under load, as will shortly be further explained. However, against the possibility of inexpert handling, producing a bind at the precise instant when the hook should be quickly jerked from socket 11, neck 13 may, if required, be quite short and clip 14 moved outward for contact adjacent the shoulder of the hook where it abuts the end of shank 12. Among other options, the neck portion 13 could be a yieldable rubber plug or the like.

Consequently, according to well known techniques applicable to ground station pickups, wherein a cross-cord forming the taut area of a suspended ground-loop, so called, is contacted by hook 10, the hook will be freed instantaneously as follows: First the loop-cord represented in schematic section at 16 will be impinged against the lower shank of the boom, moving instantly to position 17 and thence through the optional spring-operated guard element 18 to said cupped area 15 substantially as shown. As indicated by phantom 19 of the loop-line, the first tension will be a quick backward and then a straight co-longitudinal tug to release hook 10; and instantly thereafter, the drum line 9, having been made taut by the initial weight of the burden thereon, will automatically cause the now freed hook to assume a position in which the loop-line will have moved to the lower cupped area 20, as graphically shown by phantom 19^a. The drum-line 9, of course, in position 9^a will then exert a straight-on pull through the eye member 21 and through the jaw proper of the hook against the tension of the loop-line in position 19^a. Obviously, these positions are relative to the position of hook 10 before and thence after its release and will be variably different at successive instantaneous stages of the pickup operation. It is scarcely necessary to point out the special advantages of a hook so configured, for the express duties that are to be performed, since they are quite self-evident. And it is also apparent that optional guard 18 will usually be unnecessary, as premature escapement of the loop-line cannot ordinarily occur. Omission of guard 18 is particularly indicated in services where rapid burden removals and hook replacements are necessary, and wherein time (such as would be required for manipulating the guard) is at a premium.

The drum-line 9, which is preferably payed off from the aft side of drum 8, located forward of the hatch, may be loosely clipped releasably to the back of boom 4 at one or more widely spaced intervals, by suitable break-out fasteners 22, or these may be omitted and the line 9 permitted to freely flutter at position 9^b when in the outboard position. Boom 4, in accord with the aforesaid patent of record, and in common with the location of the hatchway as well, may be positioned at one lower side of the fuselage; said boom being therefore mounted at a slight angle to the axis of its pivot, enabling it to lie well within the longitudinal confines of the fuselage when retracted. This feature is clearly disclosed in Fig. 9. Specifically, boom 4, when folded, is desirably adapted to be received into a longitudinal slot which conforms with the phantom 4^c of Fig. 1, representing the boom in its inboard position. And it is desirable, if hook 10 is to be employed, that the longitudinal boom-slot S, see Fig. 8, shall communicate, along its entire length, with the interior of the cabin C by means of a narrow opening, which opening need be of a width only sufficient to permit unimpeded exit of the drum-line 9 therethrough whenever the boom is extended. This is necessary for the reason that after each burden has been taken in through the hatch, as more fully clarified hereafter, it is necessary to reposition hook 10 at the end of the boom; and on this account the aforesaid longitudinal slot is widened into an enlarged opening (not specifically shown) at the area surrounding the hook, in its installed position, permitting the required freedom of manual manipulation therefor.

The relative inaccessibility of the boom-end, when employed with hook 10, wherein extremely long booms are indicated, may be obviated in several ways. For example, hook 10 may be retained on extra long booms, suitable for spot pickups at ground stations as well as for interim cooperation—including deliveries—with airliner 1, by following, as required, the general arrangement set out in said first mentioned Patent No. 2,373,413 to S. C. Plummer. In short the boom may be pivoted in such manner that its free end can be readily swung forward into the hatchway for handy replacements of the hook. It is felt, however, that the arrangement in Figs. 1, 8 and 9 is to be preferred, for reasons that need not be detailed here, and that, even in said general utility services, including surface pickups, a much shorter boom can be used by the simple expedient of using low-wing planes with retractable main landing wheels. Thus, if plane 2 were of such a type, boom 4 need be no longer than indicated approximately by the arcuate line 23, Fig. 1, and the flight-line 23', making it possible for the flight mechanic to make hook-replacements quickly and with little difficulty. A still shorter boom, affording yet greater accessibility, will be entirely practical for the general utility pickups, as will shortly be explained.

Wherein plane 2 is to be used in feeder duty only, however, to and from liner 1 and not for general ground station work as well, and wherein retractable landing wheels are employed, it is thought that a particularly short boom to swing in the arc of curved line 24, bringing hook 10 to the flight path of line 24', will suffice. This would be particularly true if, in a short time, propellers are discarded, even from relatively light aircraft, in favor of straight turbojet propulsion as is predicted by eminent engineers. For it should be well understood that in pickup

and delivery duties of this character, which may be conveniently referred to as "co-velocity" service, each detail of the operations may be performed with a degree of deliberation and accuracy impossible in ordinary ground station work. That is, impossible where the burden is on a stationary support, on the ground for example, at the time of pickup and wherein accuracy is dependent largely upon the professional skill of the pilot.

As for the shortening of boom 4 for handy hook replacements—even if pants 6 and wheel 5 are retained and positioned as shown, while still providing a longer reach for utility pickups including ground-loop work—this may readily be accomplished in accord with Fig. 9. Thus, without detailing all of the features shown therein, which are similar to those in said second patent to Plummer, it is obviously a matter of simple mechanics to so mount the axle 4^b upon a rollable carriage, including wheel members W directly below the respective pivot-points 7, that the entire wheel and boom suspension may be moved, in any preferred manner, along a short trackway indicated generally by the rails R and phantom position 4^d, of the Y-assembly. Consequently, where boom 4 is first retracted to its substantially horizontal attitude and is then rollably swung forward to position 4^d, its hook 10 (not shown in Fig. 9) may be replaced approximately at location 10^a as indicated by arrow pointer in Fig. 8; whereas, when re-extended, said boom-hook will follow the outer arc 10^b. Therefore, by more preferably employing both the aforesaid rollable carriage and retractable landing gear, a very short boom may be used which can swing within the lesser arc 10^c. This would be of especial advantage in so-called "co-velocity" duties, according to the invention. Flight lines F^1 and F^2 are self-explanatory.

The broken line 4^e, Fig. 8, indicates approximately the angle of swing of the boom 4 at which the schematic loop-cord 16^b, having been initially disposed at position 16^a and having thence been struck by boom 4^a at position 16^b, will move instantly to location 15 (conformable with line 16 at location 19 Fig. 3), inside the jaw of the hook 10 and will jerk said hook from the boom. Position 15 indicates the location of the loop-cord just an instant prior to the release of the hook.

Referring again to Fig. 1, it will be noted that airliner 1 is fitted with a pair of extensible and retractable standards 25 on right and left sides, respectively, of the fuselage near the tail gear; it being assumed that the second of these is positioned directly behind the single standard 25 graphically shown. These standards have a utility somewhat comparable to that of ordinary ground station poles but are designed for coordinated speed service. Standards 25, in this preferred version, are preferably pivotally mounted in any desirable manner for rapid extension to upright positions, as indicated by said single standard 25; and when inactive may be received into narrow recesses at 26 on respective sides of the fuselage.

Recesses 26 are more clearly seen in the fragmentary and broken open plan view of Fig. 11, where the standards 25 are shown in their retracted positions. Said recesses are obviously much enlarged for greater clarity in the relatively small drawing. In practice, they would closely and snugly receive the respective standards. When each of these is elevated to the upright position of standard 25 in Fig. 1, the line 19^d of the burden 3 will occupy the transversely stretched position 19', in the proper attitude to be snatched by hook 10 of boom 4. The standards are here indicated to be pivoted at respective locations 25'. Obviously, the specific arrangement shown is subject to sundry modifications which may hereafter occur to skilled designers of the related art.

An advantage of the arrangement in Fig. 1 is that standards 25 may be of a length and configuration such as to bring their tips into respective positions at the rear end of the fuselage, substantially as indicated, for handy attachments of the loop-lines, which latter are also normally affixed to the baggage to be transferred. Detailed provisions as to door closures, etc., are not graphically shown since such matters are also within the domain of ordinary skills and the same can be readily supplied in general accord with these disclosures.

Thus the burden 3, resting on any serviceable support, may have said conventional loop 19^d affixed thereto and releasably to standards 25, burden 3 merely being given a backward shove through the rear door D of the baggage room R^2, as required, at the time of each pickup operation to be detailed hereafter. Light burdens, once caught in the slipstream, will trail to a position at which they may thereafter be taken aboard plane 2 in the regular manner. If desired, however, a shorter loop may be used, terminating in a single brief length of cordage attached to the burden and adapted to be carried over a sheave-wheel similar to wheel 27 on the tow-cab of Fig. 2, to be described later. And an auxiliary feed-out line, so called, as also fully explained hereafter, may be employed to facilitate such transfers especially wherein relatively heavy burdens are to be handled.

According to another arrangement, standards 25 may be located forwardly, as, for example, a short distance from the fuselage at right and left of same and extensible from the upper wing surfaces, as indicated in phantom at position 25^a. Standards 25^a, which are assumed to be in the usual duality, could retract inwardly to one another, so that their tip ends could be readily recurrently fitted with the loops of each successive unit of baggage to be switched; this operation taking place just inside the opening of an upper hatchway indicated generally at numeral 28 . . . it being understood that the wings of the liner 1, in this view, are slightly dihedral, and that the orthodox (or similar) type of break-out clips 29 (see Ballard, No. 2,369,518), when the standards are retracted, may be on a lower plane than the pivot-points 30. One such an arrangement is clearly shown and detailed in my first aforesaid application, "Intercooperative System for Airborne and Surface Carriers," where, in the end-view of Fig. 19 thereof, the tip ends of right and left standards 124 come quite closely together at area 132: which see for any required further clarification of like or similar features in respect to Fig. 1 of the present application.

Standards 25, and similar pivoted standards herein, may be operated by torsion springs (not shown) or in any other desired manner which will readily occur to designers of the art. When not in use, hatch 28 may be closed by suitable slide-doors or the like which are not therein graphically shown.

It is quite apparent, of course, to those familiar with ordinary pickup tackle, that plane 2 in Fig. 1

is in the correct position to snatch the loop-line 19d from standards 25; and the same is true with respect to said plane 2 in position 2a relative to standards 25a. In the latter case, the burden 3a can be lifted up incline 31 through hatch 28, whereupon, on being caught in the slipstream, it will—unless quite heavy—trail at position 3b until taken aboard of the pickup plane. The heavier burdens, as already intimated, may be dealt out on auxiliary feed-lines, to be again referred to later.

While probably not required for these relatively easy coordinated speed pickups, it is possible, but more expensive, to control the aim of hook 10 in either position shown by electronic homing devices 32—33, cooperable with complementary seeker instrumentalities indicated diagrammatically by element S on plane 2. The preferred positions for homes 32 and 33, if used, will be too obvious to technicians of the art to require further comment thereon. Such devices may be very desirable if pickups are to be performed at night or under any other conditions of low visibility. Likewise, a highly sensitive radar type altimeter (not shown) may be used, if not too expensive, to register the correct flight level of plane 2 relative to the upper skin of plane 1. Flag beacons, as commonly employed on ground station poles, are optional; as see said patent to Ballard, No. 2,369,513.

While I have initially described two options with relation to certain pickup tackle carried, respectively, by both liner 1 and plane 2, it will, in all likelihood, be more advantageous to normally complete a full delivery operation from plane 2 to liner 1 (to create more cargo room aboard plane 2) before performing the pickup in the manner explained. And while final decisions can best be left to skilled specialists, it is apparent that deliveries from plane 2 could first be made at the rear end of plane 1, according to burden-receiving tackle thereon to be explained shortly; after which plane 2 can move forward for the return pickup load at position 2a. And when burden 3a has been snatched through hatch 28, plane 2 is then ready to bank and return to its subsequent duties, as predetermined. Of course, any plurality of successive transfers may be made if necessary. Later, a somewhat simplified and perhaps preferred, method of successively and very rapidly interchanging burdens will be described with respect to Figs. 4, 5, 7, etc.

One practicable method of receiving a burden from plane 2 involves the use of a boom of variant type, as shown in the phantom 34 (see also the boom 34b of Fig. 4), having the special safety release-hook 35 thereon. Details of boom 34 and hook 35 are not here given, since they may be the same as the boom and hook of similar configuration shown, and quite fully described in said first named co-pending application. In brief, however, it may be explained that the partially upstanding hook 35 is adapted to snatch a loop-line appendant from plane 2, connected to a burden inside the plane, an operation which will now be described further in connection with the detail view of Fig. 5.

According to one arrangement, wherein a pick-up and delivery plane is employed of the fixed landing-wheel type, the legs are enclosed by pants 6—6, terminating in streamlined guards or gaiters 36—36. On the inner external sides of pants 6—6 are formed a complementary pair of grooves 37 adapted to receive the downwardly extensible standards 38—38, carried from respective pivots 39. A telescopic arrangement (not shown, since not preferred) is also possible, whereby the standards could move vertically on the planes of the pants. Any suitable mechanism may be employed to simultaneously extend and retract standards 38. If desired, the tips of the standards may be curved as indicated by phantoms 40 so as to extend upward to and along the curvature of the lower fuselage, whereby to project through a small opening in said fuselage. In this position, the loop 41 may be readily secured to clips 42—42 while retracted; and loop 41, passing rearwardly above a narrow slot (not shown) on the underside of the fuselage, extending backward from said small opening, may be connected to the eye 43 of burden 44 resting adjacent the opening to hatch 45, so, in its extended position, the loop 41 may be aimed at boom 34 just below hook 35.

This can be accomplished, with a forwardly faced hook, by first moving the plane 2 ahead of the hook and then falling back as required for the engagement. A window Wa of Plexiglas or the like may be provided under the pilot's seat to facilitate this operation. Upon contact, the loop 41 will slip backward into the jaw of the hook about the same instant that break-out occurs from clips 42, at which time the standards 38 can retract in any preferred manner into the grooving 37. Obviously the burden will be snatched through hatch 45, and on retraction of boom 34 to its recumbent position 34a, Fig. 1, said burden will trail to the rear as indicated by the position of the loop 41 at 41a. That is, if the burden is comparatively light. Heavier burdens may call for the use of the previously mentioned auxiliary feed-out line, as will be described very shortly.

A somewhat clearer view of this operation may be had by reference to the detail of Fig. 4. While this exhibit relates to the aforesaid tow-cab of a railborne vehicle, the burden-switching components are substantially the same as seen in Fig. 1, along with certain auxiliary tackle not shown therein but which may be similarly employed on liner 1. Assuming, therefore, that boom 34b is the same as boom 34 of Fig. 1, it will, on engagement with loop 41—which is thus schematically indicated in section at 41a—retract rearwardly to recumbent position 34a, as also seen in Fig. 1, with burden 44 trailing approximately as indicated at 41a. It is now a simple matter for the flight mechanic, holding the small snap-hook 46, which is the terminal fixture on line 47 extending from drum 48, to engage this hook to one side of the loop portion of line 41; whereupon, on jerking the pull-cord 49, according to like detailed means and procedures explained fully in said first co-pending application, to open the jaw of hook 35, position 35a, line 41 will be freed from said hook and the burden will immediately trail from the drum-line 47 at the lower line position shown. It can now be quickly reeled aboard. Said "detailed means and procedures" relative to pull-cord 49 are given in considerable detail in the copending application, wherein element 189 associated with hook 139 of Figs. 14 and 15 is substantially identical with the like component 49 of the instant application; only the configuration and variant application of the respective hooks, per se, being different. Or see the more directly comparable pull-cord 176b in Fig. 20 of that application, which operates in general accord with said previously mentioned element 189 of said copending case.

Obviously, if the burden is quite small, the use of hook 46, line 47 and drum 48 may be omitted, the flight mechanic merely pulling the burden inward manually without troubling to free the loop-line from the hook at position 35a until said burden is well inboard of the plane.

It may frequently—or usually—happen, however, that burdens of this class are quite heavy; and instead of trailing somewhat kitewise in the slipstream, they may sink through the same and prove difficult to control and to haul aboard. I therefore provide, as auxiliary rigging, the feed-out line 50, and wherein line 50 is used, a different technique is required. That is, line 50 is releasably connected to eye 43 of the burden while still inboard of plane 2 and the other end of this line is desirably affixed to a small hand-operated reel (such as reel R^1) aboard of said plane; eye 43, in this case, being sufficiently large to accommodate both the terminal of loop-line 41 and the snap-on hook 51 (Fig. 4) at the outer end of line 50. Thus when the loop-line 41 is snatched by hook 35 and burden 44 slides downward through hatch 45, it will not fall entirely by gravity but will be payed downward, through the hatch, at the end of said feed-out line.

At this juncture the flight mechanic inside the baggage room R^2 will reach up and take hold of the loop-line 41, which is still held by hook 35 at position 35a, and will begin pulling down on same; so that the burden, being mainly supported by line 50, will be in an intermediary position, relative to the respective lines, which can rather appropriately be called the attitude of a "monkey-on-the-string." In this attitude, the burden is pulled downward and somewhat inward toward the rear doorway until the flight mechanic or an assistant can fasten snap-hook 46 to eye 43, as was earlier described in a somewhat similar operation relative to loop 41; and as soon as the burden has been thus made securely appendant from winch-drum 48, and thence drawn well inboard, the flight mechanic normally unsnaps the terminal 51 of the feed-out line and the latter may thereafter be reeled back through the hatchway of plane 2.

This technique, which may be found the preferred one for both medium weight and heavy burdens, makes possible another major modification of the variable methods which may be employed. In brief, it makes possible both a burden pickup and a burden delivery as virtually one coincidental and almost simultaneous operation. This is done very simply. Before arrival of the plane 2, the flight mechanic on plane 1 singles out the burden to be transferred and places it upon any suitable convenient support adjacent the rear door, as at position 35b. Such a burden may have a very short loop-line 41b; or line 41b may be a single strand, having at its free end the snap-on terminal 52. (It would, of course, be possible to even dispense with line 41b, as will become apparent from the following explanation.) And line 50, for such service, may, more conveniently, be provided with an auxiliary terminal, such as the spur-ring 53. Hence—in accord with the procedure which was just previously described relative to a burden delivery by line 50—as soon as the burden at position 35c has been engaged by terminal 46 and is thereby safely appendant from drum 48, the flight mechanic quickly snaps hook 52 on ring 53, and unsnaps hook 51 to free line 50 from the incoming burden while simultaneously exchanging this load for the burden resting at position 35b. The latter can then be given a shove through the doorway, if necessary, to provide the required clearance, while being reeled up to plane 2. The kinked back appearance of the loop-line at position 41^2, incidentally, merely indicates the approximate doubling up of this line which will occur as the flight mechanic pulls inward and downward thereon, as earlier explained. Still further refinements in feeder-line techniques will be given later, relative to Figs. 7 and 7a, following an explanation of certain additional features which pertain to preceding figures of the drawing.

The burden-releasing or so-called delivery tackle of Fig. 5, obviously, conforms to the structure of pickup planes as now commonly employed—such as plane 2. It is felt, however, for reasons previously set out herein, that low-wing planes of the Swift class, that is, having retractable wheels, would be preferred to plane 2. Accordingly, in Fig. 6, I show another particularly advantageous arrangement of the standards 38, hatch 45, and burden 44, which is self-explanatory. It is to be noted, especially, that by this arrangement said standards are adapted to retract within two narrow slots, indicated generally at positions 37a–37b—and desirably faired to the wing surfaces—which can communicate directly into the hatch, as indicated, for successively rigging up the different loop lines to the break-out clips of the standards. These slots may be in any positions conveniently to the front or the rear of the wheel pockets, for example, which same, on the Swift, are well forward adjacent the leading edges.

Reverting again to Fig. 1, boom 34c therein, identified as being similar to booms 34 and 34b, merely indicates how, by option, both pickups and deliveries can be effected through the hatchway 28, according to procedures earlier described; it being understood that the small circular figure 41d is the schematic representation of a loop-line, as viewed sectionally, in readiness to be engaged by the hook 35'.

The previously described operations relate to burden switching from plane to plane, wherein one of the same is first stacked above another of the same. As intimated, however, various other so-called co-velocity or relative-speed engagements may be made, including burden switches between airplanes and other types of carriers. It will be unprofitable to graphically show and describe all of the possible applications but certain others will be dealt with briefly. Thus, with relation again to Fig. 4, which may be regarded as the detailed rear-end portion of either plane 1 of Fig. 1 or the tow-cab 55 of Fig. 2, nothing further need be said as to deliveries thereto (from plane to rail carrier) other than by reference to the plane-to-plane techniques already set out herein. This also includes the combination technique wherein both a pickup and a delivery may be effected coincidentally through the aid of line 50, etc. The individual pickup operation, too, may be substantially identical with that which was earlier detailed in respect to Fig. 1.

That is, the standards 25b (Fig. 2) are readily identified as being similar to standards 25; and loop-line 19c, also, may be identical with line 19d of Fig. 1. The relatively light burden B is similar to burden 3 of said Fig. 1 view. Boom 4 is seen just prior to engagement of hook 10 with the taut upper cross-cord of the loop (not seen in this side elevation) and the phantom B^1 represents the position of burden B shortly after the

pickup, the hook 10 then being in the freed position 10', as shown, relative to line 9' and loopline 19c. With regard to other features of tow-cab 55, inclusive of wheels 56, tow-strut 57, and rail 58, the said first mentioned co-pending application may be consulted. If it is desired to maintain a two-way, cab-to-plane (or plane-to-plane for that matter) control over burden B until after its delivery upwardly to plane 2, hypothetically, line 47 in conjunction with hook 46 may be employed as feed-out tackle; and if so employed may also be provided with the spur-ring 53', if desired, for returning another burden from plane 2 to baggage room R^2. On release of terminal 46 from burden B, line 47 can of course be recovered from a trailing position to drum 48. Obviously this type of feed-out line arrangement could also be employed relative to planes 1 and 2, for better controlling the upward travel of burdens, as well as wherein line 50 was employed for downwardly delivered burdens.

As mentioned earlier, burden-switching is not necessarily limited to relations between a feeder type of light plane 2 in cooperation with cab 55, for illustration, of a railborne vehicle, or with airliner 1; and for extra heavy duty work, wherein plane 1 may be operated to perform similar duties in coaction with another large aircraft, it is possible, on planes of this size, to provide at least a duality of pickup booms 59 and 60 having suitable burden-hooks 61 and 62 thereon adapted to cooperate with respective hatches indicated generally at 63 and 64. Such booms could be swingable from pivot points 65 and 66.

With reference, now, to the detail of burden-switching apparatus shown in Fig. 7, it is to be noted that while most of the components in this view are similar to those earlier described, especially in relation to Figs. 2, 4 and 5, this modification differs therefrom in certain particulars. Boom 67, for instance, while operable similarly to booms 34, 34b and 34c, from a pivot 68, and adapted to retract to the recumbent position 67a within an elongate groove 69, in a dosal position relative to the carrier 70 (which may be the tail end of an airplane, a railborne tow-cab or similar device), or as modified in connection with hatch 28 of Fig. 1, is fitted with the detachable burden-hook 71. Hook 71 is recognized as quite similar to hook 10 on the pickup boom 4 of plane 2, and is connected at eye 72 to a burden line 73 adapted to be payed off from reel 74, as schematically indicated. Boom 67 has the off-set shank portion 67', preferably, whereby to retract the hook 71 through an opening at the aft end of groove 69, into the baggage room R^3, so that replacements of the hook may be conveniently made by the flight mechanic. In general, burden switching with the tackle of Fig. 7 need not be greatly unlike the technique previously explained relative to Figs. 2, 4 and 5. The variables, however, can best be described by explaining one preferred technique which may be employed to advantage.

Assuming, therefore, that a burden is to be delivered to baggage room R^3 from a feeder plane, such as plane 2 which is here indicated merely by the detail of burden-releasing means appendant therefrom in the form of standards 38 and the loop-line 41. Assuming, also, as was previously explained in respect to Fig. 5, that the burden to be delivered to room R^3 is the same as seen in said exhibit, that is, burden 44. Moreover, the burden, presumably, is connected to both line 41 and to the feed-out line 50. Obviously, then, when hook 71 (returning to Fig. 7) impinges against the cross-cord of loop-line 41, the initial result will be to snatch the burden 44 (Fig. 5) from hatch 45 before boom 67 of Fig. 7, operating by slightly delayed action against the cushion afforded by shock-cylinder 54, has been retracted rearwardly to the angle at which hook 71 will become automatically unsocketed. Thus said burden is first seen in the Fig. 7 view at an upper position 44a, appendant from both line 41 at position 41c and line 50 at position 50a. Immediately thereafter, however, with boom 67 having swung to recumbent position 67a, the burden will be—for an exceedingly brief instant—at position 44b, with line 50 at 50b and the loop-line at position 41e. The moment that hook 71 is at the horizontal and burden 44 has been payed out to cause said burden to exert a straight-on pull against said hook (which was assumed, in this case, to be burden position 44b), the hook will be jerked from the boom, as at position 71a, and burden 44 will now be trailing from reel 74 at position 44c but still controlled from line 50 at location 50c.

In order to facilitate the ready release of hook 71 from boom 67, any desired additional length of line 73 may be payed off. It now only remains to complete the delivery by hauling the burden into room R^3 as required. That is, a light burden can be pulled in manually, but if the burden is heavy and the slipstream very strong, reel 74 is operated to draw it inboard to position 44d. In view of the fact that hook 71 is not to be desirably wound on reel 74—and while other expedients could be adopted to free the hook from the loop-line, while retaining control of same—it may be found most expedient to mount reel 74 movably at position 74a, for example; so that, in order to bring the burden well into the baggage room while hook 71 continues to maintain line 41 is a taut relation, it is merely necessary to move said movable reel backward to position 74b; that is, along the path generally indicated by upper and lower broken lines 75, 75. Very heavy burdens can be hauled aboard in this manner, employing any preferred means to move reel 74 from position 74a to position 74b.

As explained earlier, the feed-out line 50, at position 50d, may be quickly unsnapped from the burden and reeled back to plane 2. Or the burden in waiting 76, having the short length of line 77 connected thereto, inclusive of snap-hook 78, may be quickly attached to the spurring 79 before releasing the connection 51 on the received burden, whereby to exchange burden 76 for burden 44. Needless to say, any reasonable additional rings 79a could be provided on line 50, if it is desired to attach a small cluster of burdens thereto at spaced intervals; or all could be attached to a single ring if of suitable dimensioning. Furthermore, in order to maintain the maximum of control over exchange burden 76 while passing through the slipstreams of both carriers, I also provide the lower feed-out line 80, which pays off from reel 81; line 80 being normally connected as indicated to burden 76 before hook 78 is snapped on ring 79. Obviously, line 80 will be payed out only as required while burden 76, under two-way control, is being first elevated and then reeled aboard plane 2; and will thereafter, upon its disconnection aboard plane 2, be retracted to reel 81.

While the various burden-switching operations have been described with reference to inanimate mail or baggage, it is obviously possible—especially in time of emergency, and in the course of

military operations—to transfer human beings quite safely in a similar way.

Such an operation is briefly illustrated in Fig. 7a, utilizing both drum-line 73 or the like (see Fig. 7) or just a loop-line 41 if boom 34 is employed instead of boom 67, as well as a feed-out line 50. The human body 31a is presumed to have descended from an upper aircraft A^1 and is about to be received into a lower aircraft A^2 substantially as indicated. To carry out such an operation, however, it is desirable to provide a suitable harness 82; and since individuals who are to be switched in this manner will probably be equipped also with parachutes, such as the back pack 83, for illustration, it is readily possible to provide any preferred additional strap thereon, such as element 84, having a metal thimble or the like, to which line 50 may be securely connected releasably.

By option, in the cold upper air, the man 31 may have his wrists manacled together by any suitable device adapted for connection to the loop-line 41 at eye 85, whereby to insure a properly trussed position throughout the transfer, without imposing undue strain upon arms and hands or relying upon a mere palm grip for security; line 41 being additionally connected to a chest-plate P or the like as indicated. Or any other preferred means for attaching line 50 and/or line 41 may be utilized. The man in Fig. 7a is wearing a special airman's suit, as well as a helmet, with goggles, for protection against the action of the airstream. Wounded men, obviously could be similarly switched according to minor variations in the technique herein disclosed, and which will, hereafter, readily occur to skilled operators of the art.

A final word, at this point, in further reference to the apparatus of Fig. 8:

Wherein the airplane 2 is to be used not only for airborne transfers but also for spot deliveries and pickup as well, over local ground routes—or wherein restricted to such latter services—it may be desirable to include "drop-off" tackle on the aircraft: that is, means for delivering burdens at particular ground stations from a height quite close to the ground; it being a normal procedure for present airplanes of the comparable type referred to to deliver one or more burdens just prior to picking up another burden at such points. For this purpose, therefore, I also provide that plane 2 may have a second hatchway, indicated generally at numeral 90, as well as another reel 91, including the delivery line 92 payable therefrom. Line 92 bears the delivery hook 93, substantially as indicated, which hook can be quickly connected to the burden to be dropped 94, as, for one possible arrangement, by means of the short loop 95. Since hook 93 is adapted to instantaneously free burden 94 upon actuation by the flight mechanic, it is provided that this hook may be of substantially the same type as the earlier mentioned hook of Fig. 14 in said copending application "Intercooperative System for Airborne and Surface Carriers," but carried at the end of a suitably small shank 96; whereby, on application of sudden sharp manual tension upon the auxiliary pull-cord 97, the jaw of the hook will immediately yield to the tug of the burden 94 and thus free loop 95 and the burden connected thereto.

In short, both the very short line 92 and the short pull-cord 97 can be wound together on the same reel (reel 91); and it is a simple matter for the flight mechanic to take hold of the pull cord, only, when ready to jerk the same sharply at the instant the burden is to be dropped. As burden 94 may be trailing quite close to the ground at the time of delivery, mail sacks and the like can be dropped with a minimum of injury to either the container or its contents. Obviously, upon release of burden 94, line 92, inclusive of cord 97 and hook 93, may be quickly retrieved through hatch 99 without interfering with the operation of the complementary pickup tackle.

The components of Fig. 10 are self-explanatory, including the high-speed submarine 86 and feeder plane 2, the water craft being fitted with a cab 87 and burden-receiving apparatus inclusive of boom 88, as well as a full complement of other burden-switching facilities, such as described relative to Figs. 2 and 4 or Fig. 7. Among these facilities are the standards 89; and it is apparent, in view of the technique earlier explained relative to Figs. 4 and 7, that burdens may be switched either from plane to submarine or from submarine to plane.

Having merely explained certain particular physical embodiments by means of which the invention may be carried out, and certain preferred methods applicable thereto, it will be understood that my concept is in no way limited by, or solely to, these embodiments or these methods. The invention, in short, is to be limited only to a proper interpretation of the hereafter appended claims.

I, therefore, claim:

1. In a burden-switching system, the combination including: a first mobile body; a second mobile body; a burden on each of the bodies to be switched therefrom to the other thereof while said bodies are traveling at coordinated speeds, each of said bodies having a hatchway through which burdens are transferred; outboard means on an upper of said bodies, to which is releasably attached one sectional portion of a burden line, another portion of this line being connected to the burden on said upper body; a line-engaging means extensible upwardly from the lower of said bodies for releasing contact with said first sectional portion of said burden line; an auxiliary feed-out line, bearing means by which one portion thereof is also connected to said burden on said uppermost body; line pay-out means on said upper body, to which another portion of said auxiliary line is connected, and from which it is progressively extensible, in burden-supporting-and-controlling relations, while the said upper burden, upon its transposal normally through the hatchway in said upper of the bodies—incidental to the contact of said line-engaging means with the outboard portion of said first burden line and the latter's entire relinquishment, along with said upper burden, to said lower of the bodies—is being normally hauled inboard the lower of the bodies through its own burden-receiving hatchway; the burden on said lower of the bodies bearing means by which it, in turn, is connectable to said auxiliary line for transference through the air to said upper of the bodies.

2. In a burden-switching system, the combination including: a first mobile body; a second mobile body; a burden on each of the bodies to be switched therefrom to the other thereof while said bodies are traveling at coordinated speeds, each of said bodies having a hatchway through which burdens are transferred; outboard means on a lower of said bodies, to which is releasably attached one sectional portion of a burden line, another portion of this line being connected to

the burden on said lower of the bodies; a line-engaging means extensible downwardly from the upper of said bodies for releasing contact with said first sectional portion of said burden line; an auxiliary feed-out line, bearing means by which one portion thereof is also detachably connected to said burden on said lowermost body; line pay-out means on said lower body, to which another portion of said auxiliary line is connected, and from which it is progressively extensible, in burden-supporting-and-controlling relations, while the said lower burden, upon its transposal normally through the hatchway in said lower of the bodies—incidental to the contact of said line-engaging means with the outboard portion of said first burden line and the latter's entire relinquishment, along with said lower burden, to said upper of the bodies—is being normally hauled inboard the upper of the bodies through its own burden-receiving hatchway; the burden on said upper of the bodies bearing means by which it, in turn, is connectable to said auxiliary line for its transference through the air to and into said lower of the bodies.

3. A burden-switching system which includes, in combination: a first and a second mobile body traveling at coordinated speeds with respect to one another and adjacent one another, at least an upper of said bodies being an aircraft; a burden on one of said bodies to be transferred through the air to and into the other thereof; flexible line tackle connected at one portion thereof to said burden; outboard line-supporting means on the burden-bearing body, from which another portion of said line tackle is releasably supported; line-engaging means extensible from the other of said bodies and operable to make releasing contact with said another portion of said line tackle, for establishing a first burden-transferring contact between the respective bodies; an opening in said upper of the bodies, and another opening in the lower thereof through which burdens are transferred; an auxiliary burden feed-out line connected, at one portion thereof, to said burden; and means, associated with the other end portion of said feed-out line, operable to pay-out progressive portions of this latter named line coincidental to the normal passage of said burden through the opening of the burden-relinquishing body, and its transference thence through the opening on the burden-receiving body, responsive to the action of said line-engaging means and the coincidental release of said another portion of said first flexible line tackle.

4. The method of transferring a burden from one airborne craft to another which includes: flying a first of said aircraft above the other at coordinated speeds therebetween; attaching one portion of a flexible burden line to said burden, resting on the upper of the aircraft, and another portion thereof, remote from said burden-attached portion, to line-supporting means therefor on said upper craft; attaching an auxiliary feed-out line to said burden; operating means on the lower of the aircraft to releasingly engage said another portion of said burden line, for the establishment of a burden-transferring contact between the respective crafts; and the relinquishment of the burden from said upper to said lower of the aircrafts and its movement through the air from one to the other while at least partially stabilized—against aerodynamic forces tending to force it out of control—by the relinquishment of progressive portions of said feed-out line from said upper of the cooperating aircraft.

5. The augmented method of claim 4 which includes, as additional steps, receiving said burden on said lower aircraft, disconnecting said feed-out line therefrom, connecting said feed-out line to a burden on said lower craft for its transference therefrom to said upper craft, and the relinquishment of the latter named burden from said lower to said upper of the respective aircraft.

6. The augmented method of claim 4 which includes, as additional steps, receiving said burden on said lower aircraft, disconnecting said feed-out line therefrom, connecting said feed-out line to a burden on said lower craft for its transference therefrom to said upper craft, connecting another feed-out line to the latter named burden while still aboard the lower aircraft, operating means aboard the upper aircraft to haul in progressive portions of said first feed-out line, the coincidental pay-out of the second-named feed-out line to the burden from said lower craft, and its — said latter burden's — transference through the air from said lower to said upper of the respective aircrafts.

7. The method of transferring a burden from one mobile body to another—at least an upper of which bodies is an air-borne craft—while traveling at coordinated speeds; said method including the disposal of one terminal portion of a burden line between a duality of spaced, outboard line-engaging-and-releasing means on said craft; operating means extensible from the lower of said bodies to engage said terminal portion of said line, and its release thereto from said first line-engaging-and-releasing means; the further operation of said extensible means to bring said terminal portion of said line to the proximity of a burden on the lower of said bodies to be transferred to the upper thereof; connecting said burden to said line, and its coincidental disconnection from said extensible means; thence the retrieval of said terminal portion of said burden-line to, and entirely into, said aircraft, including the coincidental relinquishment and transportation of said burden from said lower to the upper of the mobile bodies.

8. The augmented method of claim 7 which includes: connecting a feed-out line to said burden before its relinquishment from the lower of said bodies, paying out progressive portions of said feed-out line to the burden during its transference to and into said aircraft, and, thence, the disconnection of the feed-out line from said burden and the retrieval of the payed out portion thereof aboard said lower of the mobile bodies.

9. In combination: an aircraft; a burden thereon to be transferred therefrom through the air to another mobile body; a first burden-line which has initially been made fast at one terminal thereof to said burden and operable to establish a first burden-transferring connection directly between the burden proper and said another body; and an auxiliary burden feed-out line, which also is connected securely to said burden and operable to lower it from said aircraft to said other body following the arrival normally of one end section of said first named line, remote from said referred to terminal thereof, aboard said another mobile body and the hauling down of this line against the tension of said auxiliary line during said lowering procedure.

10. In an aircraft, the combination including: a fuselage having an opening formed in the lower side thereof; a rollable carriage device mounted within the interior of said fuselage, on the floor side thereof forwardly of said opening; and a burden boom integrally attached to said carriage; said boom having a freely disposable rear end section thereof, to which a snatch hook is connected, and adapted for extensible-retractive movements, respectively, relative to said opening and to the aircraft underside responsive to normal forward and backward motions of said carriage.

11. As a new aeronautical combination, components including: a burden-relinquishing aircraft; a burden-receiving aircraft traveling a flight course adjacent the path of travel of said first mentioned craft and at coordinated speeds therewith; a human burden in process of being transferred through the air from said relinquishing to said receiving aircraft; a transfer harness secured to said burden, said harness comprising a main body-supporting portion thereof, means thereon to which a first burden line is connectable at a location to facilitate the lowering of the burden downwardly from said relinquishing craft, and a second line-engageable device to which a second burden line is extensible between said burden and the receiving aircraft; said combination including burden lines having terminals connected to the respectively named line-engaging means of said harness, one such line interconnecting the occupied harness with said relinquishing craft and the other interconnecting it with said receiving aircraft, the duality thereof being entrained in such manner that the burden itself occupies an intermediary position between said lines for the duration of the transfer operation.

References Cited in the file of this patent

UNITED STATES PATENTS

Number	Name	Date
1,070,197	Snell	Aug. 12, 1913
1,146,695	Dugro	July 13, 1915
1,439,927	Uppercu	Dec. 26, 1922
1,474,457	Weinberg et al.	Nov. 20, 1923
1,582,090	Smith	Apr. 27, 1926
1,760,684	Clifford	May 27, 1930
1,912,722	Perkins	June 6, 1933
1,925,555	Bradshaw	Sept. 5, 1933
1,973,244	Adams	Sept. 11, 1934
1,992,800	Adams	Feb. 26, 1935
2,102,604	Arndt	Dec. 21, 1937
2,131,610	Arndt	Sept. 27, 1938
2,193,312	Cobham	Mar. 12, 1940
2,319,881	Ray	May 25, 1943
2,373,413	Plummer	Apr. 10, 1945
2,386,395	Hart	Oct. 9, 1945
2,418,702	Du Pont	Apr. 8, 1947
2,433,437	Cotton	Dec. 30, 1947
2,433,473	Mitchell	Dec. 30, 1947
2,437,619	Setz	Mar. 9, 1948
2,488,538	Hoehn et al.	Nov. 22, 1949

FOREIGN PATENTS

Number	Country	Date
649,884	France	Sept. 10, 1928
369,228	Great Britain	Mar. 16, 1932