March 20, 1945. R. WEIR 2,371,861

DESK LAMP

Filed March 11, 1943 2 Sheets-Sheet 1

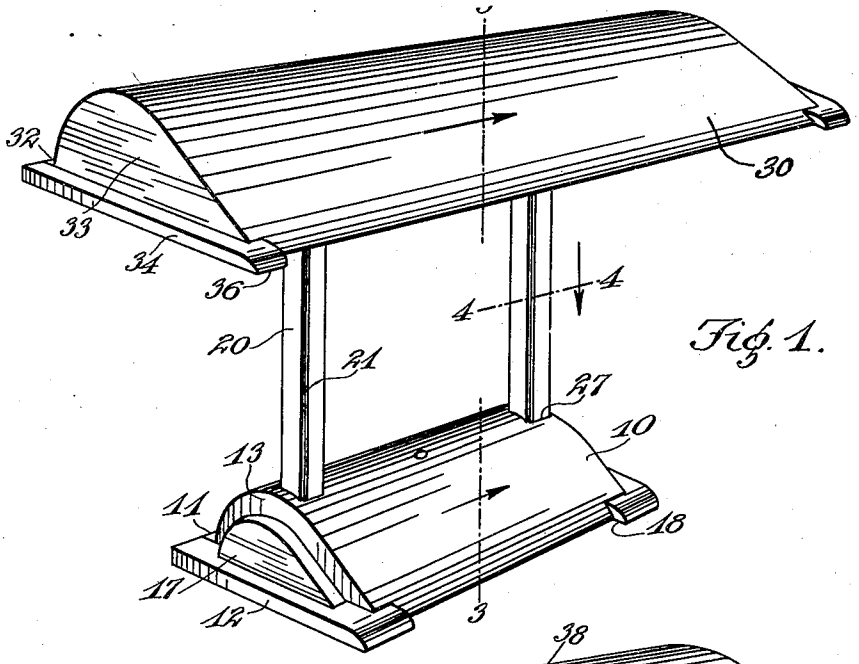

Fig. 1.

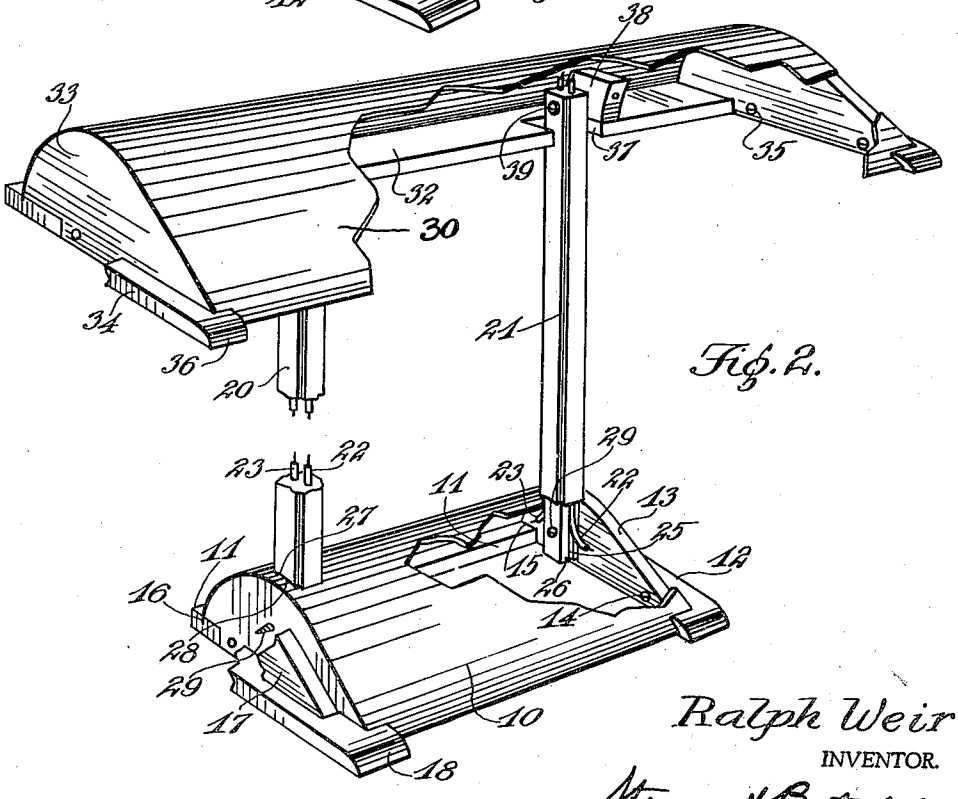

Fig. 2.

Ralph Weir

INVENTOR.

BY Stewart & Batchelder

ATTORNEYS.

March 20, 1945. R. WEIR 2,371,861

DESK LAMP

Filed March 11, 1943 2 Sheets-Sheet 2

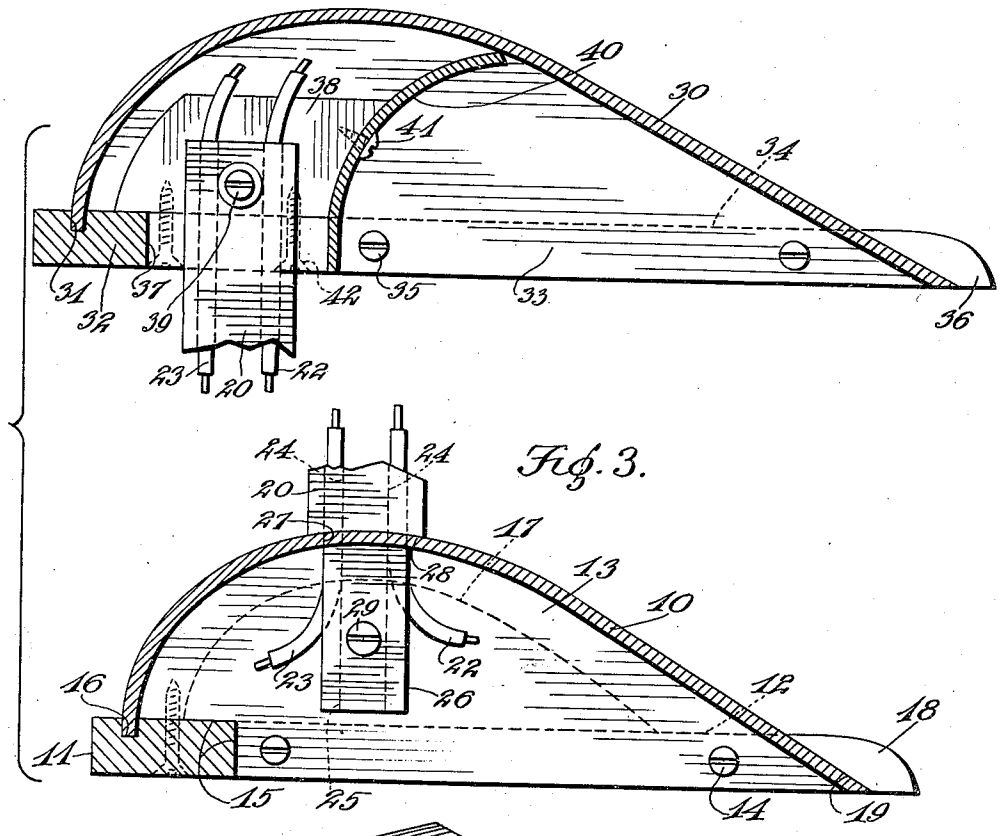

Fig. 3.

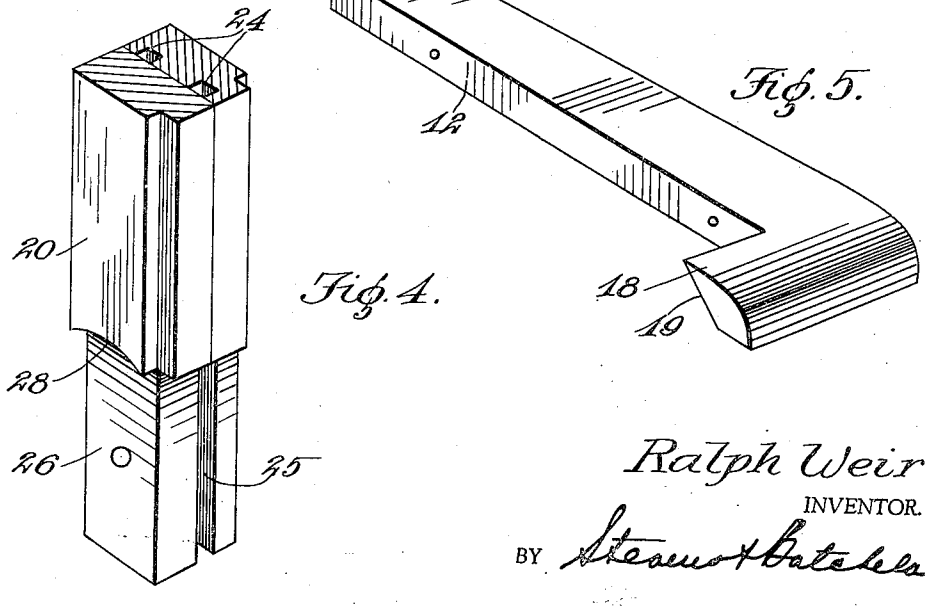

Fig. 4.

Fig. 5.

Ralph Weir
INVENTOR.

BY Stevens & Batchelder

ATTORNEYS.

Patented Mar. 20, 1945 2,371,861

UNITED STATES PATENT OFFICE

2,371,861

DESK LAMP

Ralph Weir, Chicago, Ill.

Application March 11, 1943, Serial No. 478,774

4 Claims. (Cl. 248—194)

My invention relates to fluorescent lamps, and more particularly to the desk lamp variety, and my main object is to provide a lamp of this kind which uses practically no metal in its frame work or structural make-up.

A further object of the invention is to provide a lamp of the above type which is assembled from composition stock of any character which is not readily inflammable.

Another object of the invention is to construct a lamp of this character in a manner to adapt the same to any conventional design of fluorescent desk lamps.

A still further object of the invention is to so design the novel lamp that it may be made up from stock of limited thickness, such as the fibreboard known as "Masonite."

Another object of the invention is to construct the units and parts of the lamp in a manner to make it readily assemblable from odd remnants of "Masonite" stock which are otherwise discarded.

An important object of the invention is to construct a lamp of the above character in a manner to render its cost relatively small and its assembly easy.

With the above objects in view and any others which may suggest themselves from the description to follow, a better understanding of the invention may be had by reference to the accompanying drawings, in which—

Fig. 1 is a perspective view of the improved lamp;

Fig. 2 is a similar view cut away in places to expose the interior of the lamp;

Fig. 3 is an enlarged section of the lamp on the line 3—3 of Fig. 1 and with its medial portion broken away;

Fig. 4 is a perspective section on an enlarged scale taken on the line 4—4 of Fig. 1; and

Fig. 5 is a perspective view of an end guard for the lamp head and base.

Primarily, the development of the instant lamp follows a trend to depart from the use of metal in the structural make-up of fluorescent desk lamps. As a substitute, "Masonite" is a wood fibre which is compressed into a hard state, will withstand temperatures of several hundred degrees, and is not readily inflammable. Owing to the hardness of the material, it is impracticable to drill or work it to more than a limited extent, so that it is generally fabricated at thicknesses not exceeding one-half inch, sections within this thickness being more readily workable and assemblable by glue, cement or other means to form units of such added thickness as may be desired. The present lamp is of a character utilizing standard "Masonite" stock, mostly in single thicknesses, in a manner to form a simple and sturdy structure.

Generally, the improved lamp is composed of a base, a pair of columns near the ends thereof, and a head supported by the columns.

The base is generally denoted in the drawings by the numeral 10, and comprises a thin sheet of the "Masonite" or like fibre which assumes a gradual arch from front to rear, and is preferably pre-fabricated in this form by means of heat and pressure. The base 10 receives a bottom rail 11 at the rear and bottom rails 12 at the sides, the latter receiving upstanding wall pieces 13 against their inner edges, and the wall pieces being secured to the side rails by screws 14. The top contour of the wall pieces 13 conforms to the shape of the base 10, fitting inside the edges thereof. The base is secured to the wall pieces 13 by an application of glue or other adhesive.

The wall pieces 13 are recessed at the rear as indicated at 15 to receive the back rail 11, the latter being glued to the wall pieces in order to hold its place; also, the upper face of the back rail 11 is made with a longitudinal groove 16 adapted to receive the rear end of the base 10 with an application of glue, this joint locking the base sheet against accidental separation.

The wall pieces 13 are reinforced on the outside by blocks 17 which are either glued to the wall pieces or integral therewith. The blocks 17 are shorter at the bottom than the wall pieces and are adapted to over-lie the side rails 12 and thus use these as supports for the base. The side rails are extended with inward bends 18 at their front ends, such bends being under-cut from their rear edges as indicated at 19 to fit over the correspondingly-inclined forward portion of the base and serve as retainers therefor in case the base sheet should have a tendency to spring away from its supporting pieces 13.

The columns are indicated at 20 and are of substantially square cross-section. The front edges of the columns are shown with corner flutings 21 for purposes of ornament; however, the columns may be made with any suitable design. They are laterally assembled from two strips of the "Masonite" material, first to secure the necessary thickness for the column, and second to facilitate the formation of passages therein for the feed wire leads 22 and 23 extending from the base to the head of the lamp. Since it is difficult and impracticable to drill or bore passages of this kind in the "Masonite" material, a

simple method to form them is to rout a pair of grooves 24 in the inner face of one of the column rails before these are glued together. The outer walls of the grooves are cut away as indicated at 25 to provide outlets for the leads 22 and 23 to the transformer and switch usually located in the base of the lamp (not shown).

The column 20 is reduced in thickness to form a stem 26 where the column enters the base. The latter is of course cut with openings 27 for this purpose, and the column is formed with curved shoulders or ledges 28 over the base to conform to its curvature. The column stems 26 occur along the inner faces of the wall pieces 13; and they are secured to the same by screws 29. Thus, when the columns are so secured, the portions thereof which rest on the base 10 serve to hold the latter down in the manner of clamps.

The columns 20 rise into the lamp head 30 and terminate spacedly from the top of the same. The lamp head is a sheet of material similar to the base 10; and it is reinforced in the same manner. Thus, the rear end of the lamp head fits into the top groove 31 of a back rail 32; and the latter receives side pieces 33 opposite its ends to form supports for the head 30. Outer guards 34 are applied to the side pieces 33, being secured from the inside thereof by screws 35. As in the previous case, the guards 34 have inward bands 36 to form the retainers for the front end of the head 30.

The back rail 32 is cut with recesses 37 from the front to permit the passage of the columns 20 into the head 30. The back rail 32 carries upstanding blocks 38 along the outer sides of the recesses 37; and screws 39 pass outwardly through the columns into the respective blocks 38 to form pivotal supports for the lamp head from the columns, so that the lamp head may be adjusted accordingly.

A curved strip 40 is led into the head 30 to serve as a reflector in conjunction with the forward portion of the head. The strip 40 is backed against the blocks 38, whose frontal edges are curved similarly to the strip; and screws 41 serve to secure the reflector strip to the blocks. Screws 42 are applied from the bottom of the back rail 32 into the blocks 38 in order to secure the same to the back rail. The electric lead wires 22 and 23 are shown emerging from the upper ends of the columns, and it will be understood that they will be led through suitable passages in the reflector strip 40 into the frontal compartment of the head to connect with the fluorescent tube unit (not shown).

It will be evident from the above description that I have provided a lamp which is basically formed in the three units of the base, columns and head. However, each of these units, while combining to form a fluorescent desk lamp of conventional design, has its own make-up peculiar to the form of material used. Thus, the base 10 and head 30 utilize the sheet form of "Masonite" or other suitable fibre, while the side pieces 13 and 33 reinforce the base and head respectively. Moreover, the side pieces 13 receive additional material in the extension 17 to provide a firm support for the columns 20. The latter combine the use of two-ply material with the advantage of passages easily made in the face of one ply, resulting in a column which is both sturdy and incorporates the proper passages for the wire leads. In the lamp head, the back rail 32 not only forms a basic support, but also furnishes a locking retainer at the rear for the head 30; and it has the further function of carrying the blocks 38 which are pivoted to the columns. The outer guards 12 and 34 form simple external reinforcements and frontal retainers for the lamp base and head, respectively. Altogether, the novel lamp is made up of the fewest number of parts which will give it strength, proper form, required utility and durability for an extended period of use, while employing a material which is cheap, easily fabricated to size and form and susceptible of development and ornamentation to suit any number of designs and styles.

While I have described the improved desk lamp along specific lines, it is apparent that minor changes or refinements may be made therein without departing from its principle, and I desire to consider all such changes and refinements as coming within the scope and spirit of the appended claims.

I claim:

1. A lamp having a head, columns supporting the same, and a base receiving the columns, said base comprising a pair of side pieces alongside the bottom portions of the columns, securing means directed laterally from said portions into the respective side pieces, and a top over the latter and perforated for the passage of said portions into the base.

2. The structure of claim 1, a back rail receiving the rear ends of the side pieces, and a retentive joint in the back rail for the rear end of the top.

3. The structure of claim 1, and a back rail receiving the rear ends of the side pieces and longitudinally grooved to tightly lodge the rear end of the top.

4. The structure of claim 1, guard rails outside the side pieces, and inward frontal bends of the guard rails upon the front of the top to retain the same upon the side pieces.

RALPH WEIR.