US 20060041289A1

(19) United States

(12) Patent Application Publication

(10) Pub. No.: US 2006/0041289 A1

(43) Pub. Date: Feb. 23, 2006

Cense et al.

(54) SKIN TREATING DEVICE WITH PROTECTION AGAINST RADIATION PULSE OVERDOSE

(76) Inventors: **Abraham Josephus Cense**, Cambridge, MA (US); **Gerrit Jan Veldhuis**, Hengelo (NL); **Jan Simonsen**, Struer (DK); **Michiel Errit Roersma**, Eindhoven (NL); **Lucas Josef Maria Schlangen**, Eindhoven (NL); **Antonius Maarten Nuijs**, Eindhoven (NL)

Correspondence Address:
PHILIPS INTELLECTUAL PROPERTY & STANDARDS
P.O. BOX 3001
BRIARCLIFF MANOR, NY 10510 (US)

(21) Appl. No.: **11/231,383**

(22) Filed: **Sep. 21, 2005**

Related U.S. Application Data

(62) Division of application No. 10/122,740, filed on Apr. 15, 2002, now Pat. No. 6,955,672.

(30) **Foreign Application Priority Data**

Apr. 20, 2001 (EP) 01201432.0

Publication Classification

(51) **Int. Cl.**
A61N 5/06 (2006.01)

(52) **U.S. Cl.** **607/88**

(57) **ABSTRACT**

A device for the treatment of skin by radiation pulses. The device has a detector measuring a biophysical property of skin, such as temperature increase, dispersion or absorption coefficient, or reflection coefficient for light having a predetermined wavelength, and also has a control unit which determines, from the biophysical property, a safe dose of radiation. The device automatically protects against an overdose from the radiation source. The invention can be used, not only in a hair removing device such as a laser epilator, a laser shaver or a flashlight epilator, but also in devices for the medical treatment of skin by means of radiation, such as photodermatology systems.

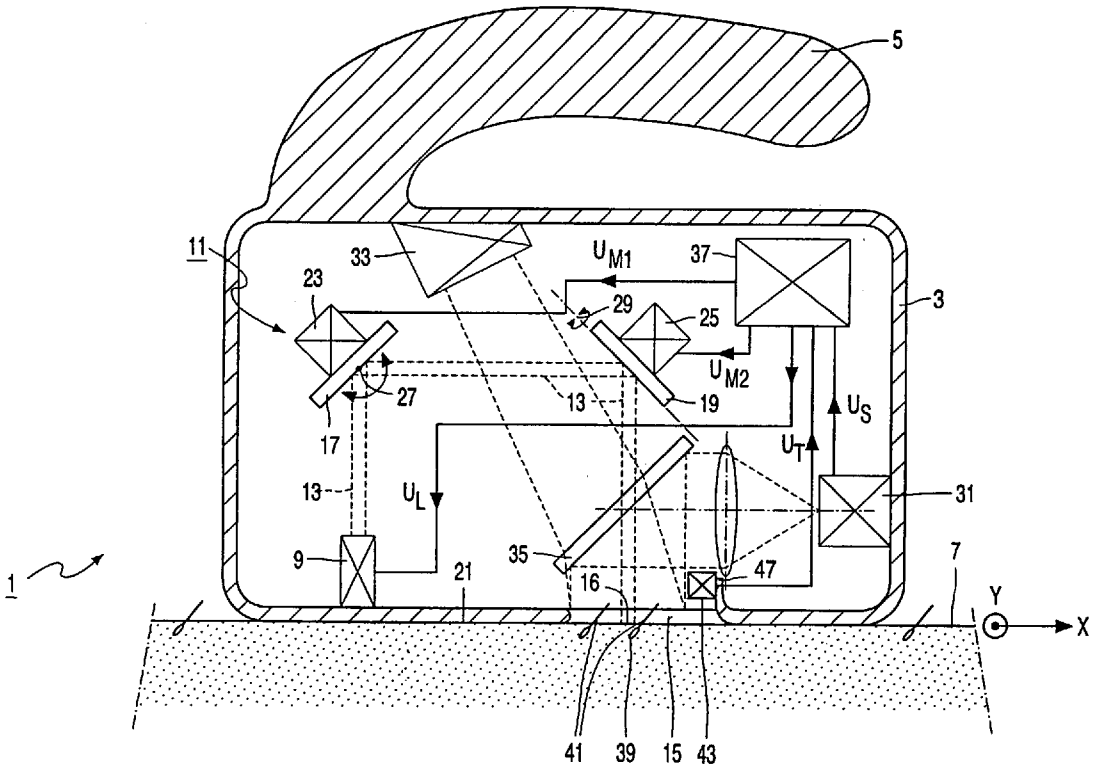

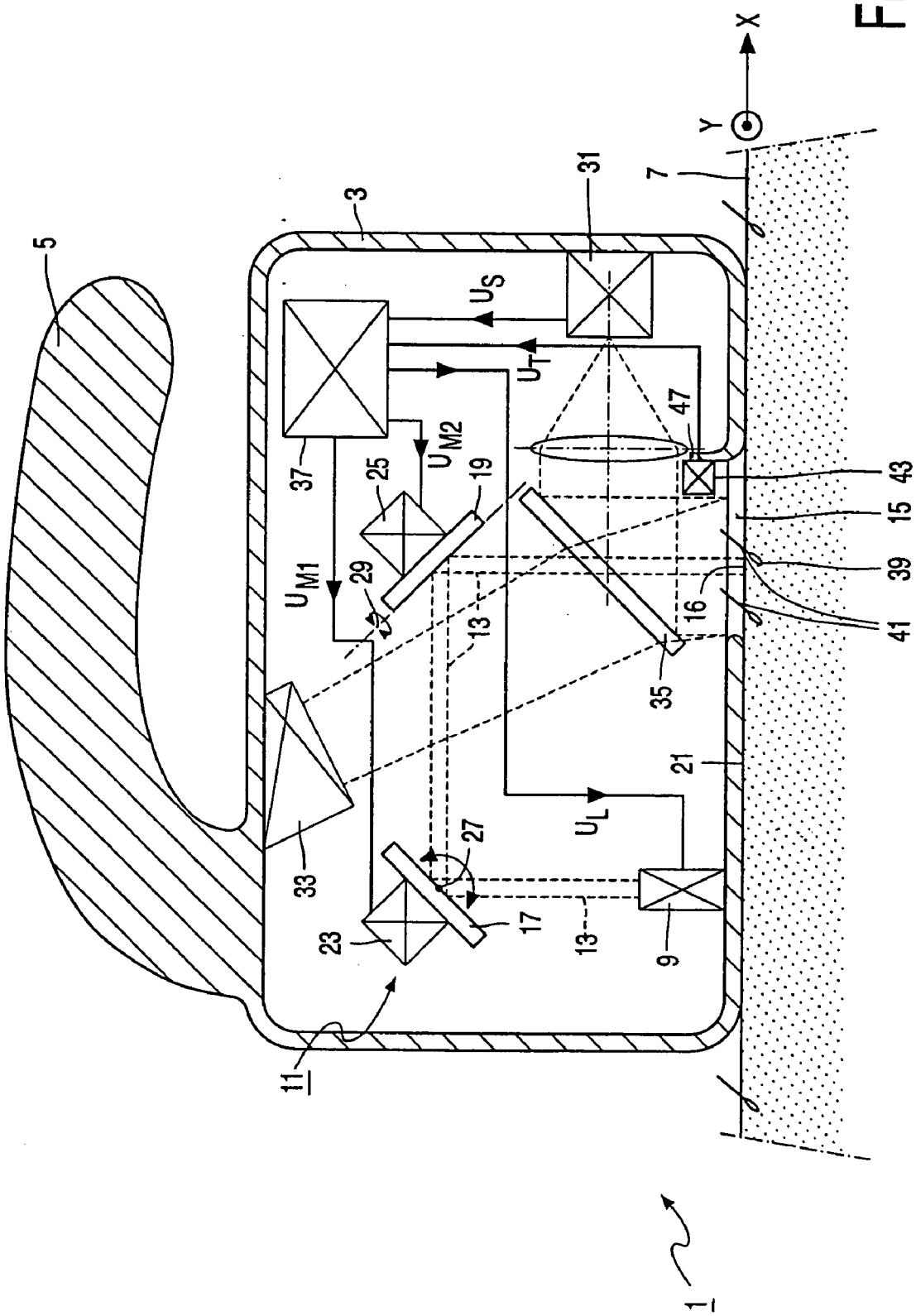
5
3
31
7
X
Y
U_S
U_T
U_{M2}
U_{M1}
U_L
37
25
19
29
47
43
15
39
41
16
13
35
21
33
27
23
17
9
11
1

FIG. 1

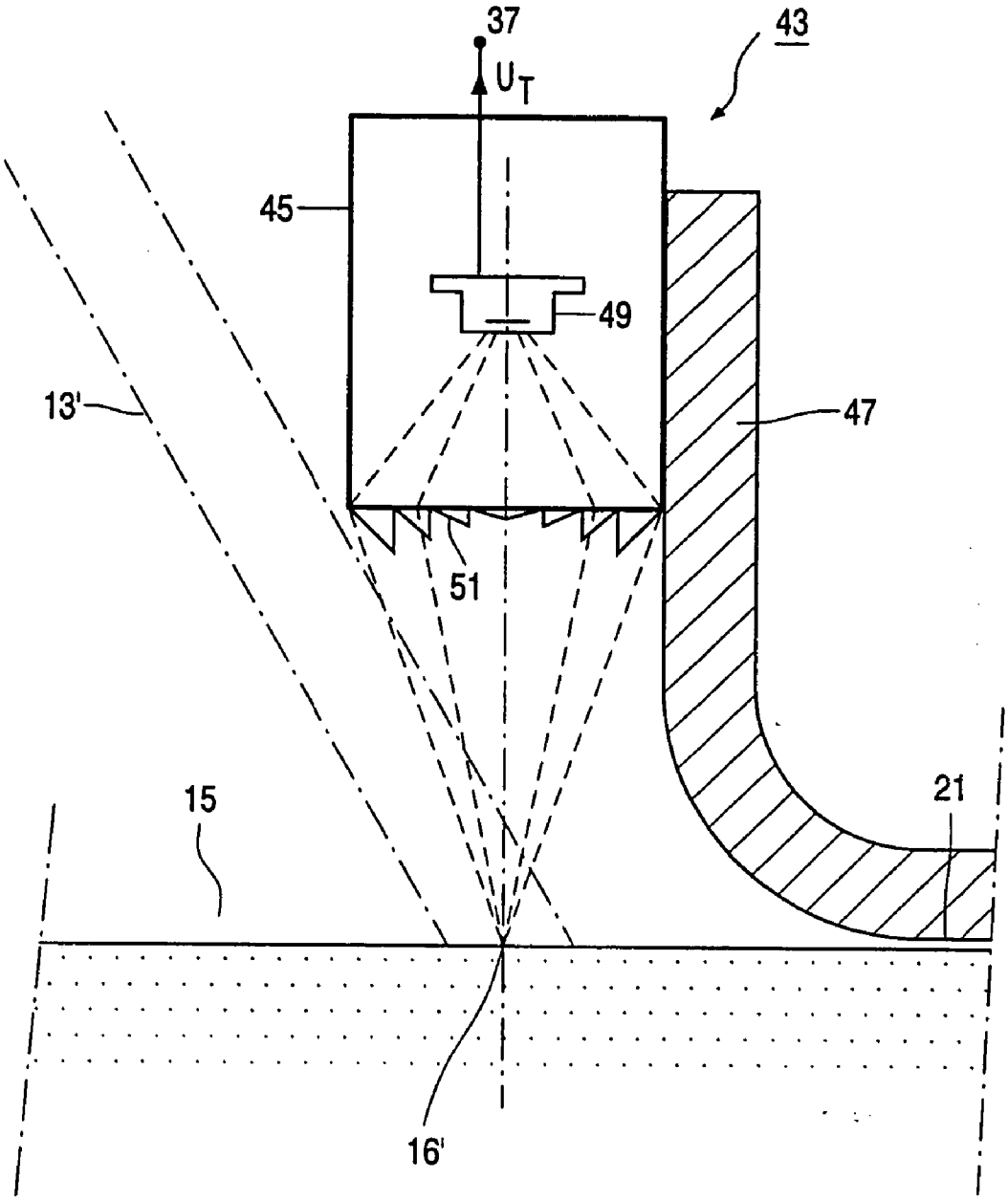

FIG. 2

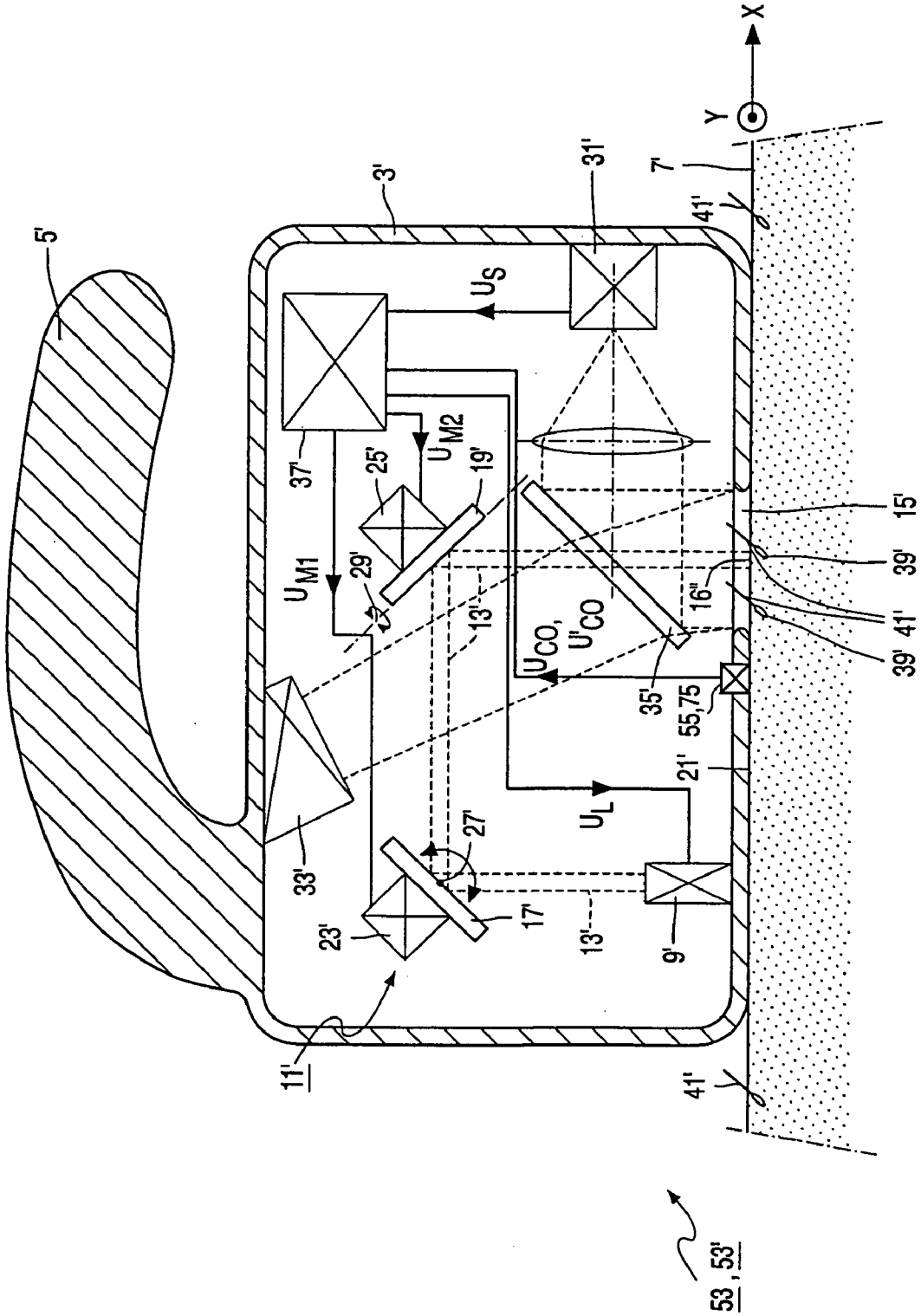
5'
3'
31'
7'
41'
X
Y
U_S
37'
U_{M2}
25'
19'
U_{M1}
29'
13''
U_{CO}, U'_{CO}
16''
35'
55,75
15'
39'
41'
39'
21'
U_L
27'
33'
23'
17'
13'
9'
11'
41'
53, 53'

FIG. 3

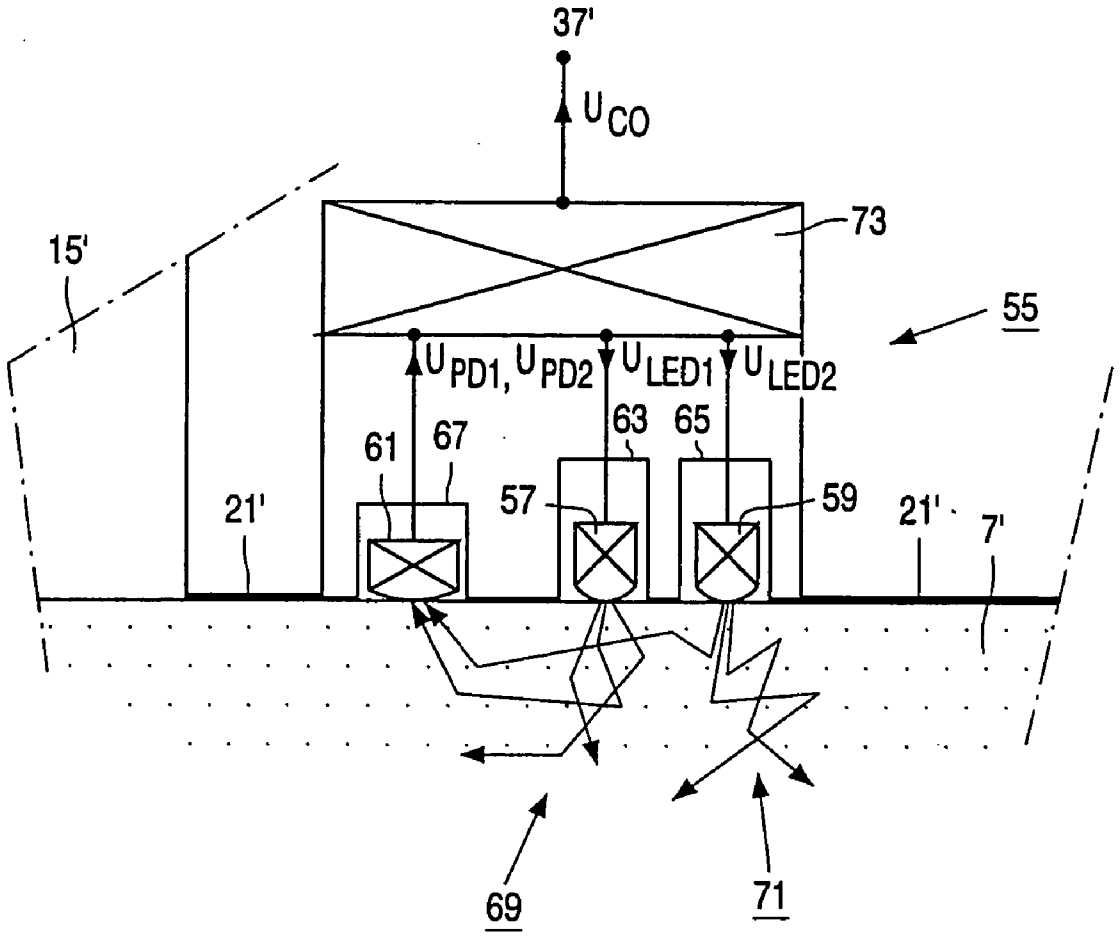
37'
U_{CO}
73
15'
55
U_{PD1}, U_{PD2}
U_{LED1}
U_{LED2}
61
67
63
65
57
59
21'
21'
7'
69
71

FIG. 4

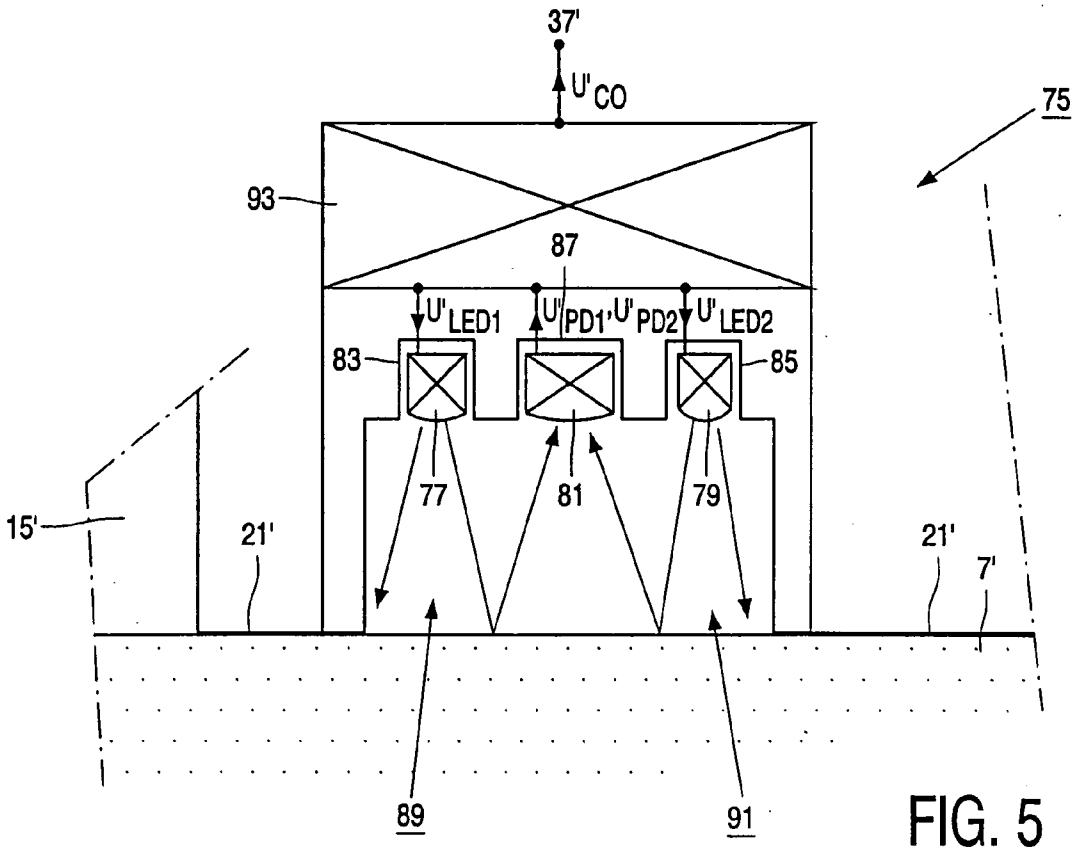
37'
U'CO
75
93
87
U'LED1
U'PD1
U'PD2
U'LED2
83
85
77
81
79
15'
21'
21'
7'
89
91

FIG. 5

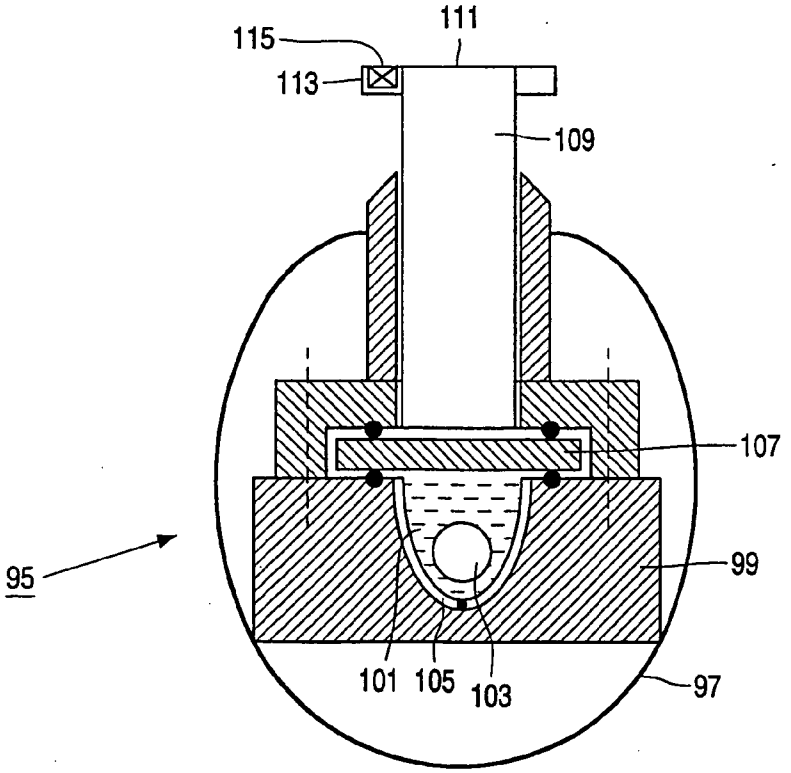
115
111
113
109
107
95
99
101
105
103
97

FIG. 6

SKIN TREATING DEVICE WITH PROTECTION AGAINST RADIATION PULSE OVERDOSE

[0001] This is a divisional of prior application Ser. No. 10/122,740, filed Apr. 15, 2002.

[0002] The invention relates to a device for treating skin by means of radiation pulses, which device comprises a housing, which accommodates a radiation source, and a control unit for controlling the radiation source.

[0003] A device of the type mentioned in the opening paragraph is known from WO-A-00/62700. Said known device is a hair removing device, in particular a laser epilation device, by means of which hairs present on the skin are removed for a comparatively long period of time or permanently by means of laser pulses. The radiation source of the known device is a laser source. The housing of the device is provided with an exit opening, which is to be placed on the skin to be treated. The laser source generates a laser beam, which, by means of a laser beam manipulator, is positioned in a target position on the skin via the exit opening. The target position corresponds to a position of a hair root in the skin and is established by the control unit from an image of the skin that is recorded by means of an image sensor that is also arranged in the housing. The control unit successively sends the laser beam manipulator to all target positions established from the image, the laser source being activated, in each target position, by the control unit so as to generate a laser pulse of a predetermined pulse dose, i.e. a predetermined duration and intensity. As a result, the hair roots present in front of the exit opening are successively heated, causing said hair roots to die. As the target positions are automatically determined, the device can particularly suitably be used for the consumer market, i.e. the device is suitable for non-professional use.

[0004] In the known device, the laser pulses generated by the laser source have a predetermined pulse dose that is so high that the hair types that are most common in practice die under the influence of the laser pulses. A drawback of the known device is that the laser pulses may have undesirable side-effects on the skin present around the hair roots, such as skin irritations and pain. In the case of sensitive skin types, even small burns or pigment changes may be caused.

[0005] It is an object of the invention to provide a device of the type mentioned in the opening paragraph, which is protected against an overdose of the radiation pulses that would be impermissible because of its effect on the skin, so that the above-mentioned drawback of the known device is precluded as much as possible.

[0006] To achieve this object, a device of the type mentioned in the opening paragraph is characterized in accordance with the invention in that the device comprises a detector for measuring a biophysical property of the skin, the control unit comprising means which enable a pulse dose from the radiation source that is permissible for the skin to be determined on the basis of a value or condition of the property measured by means of the detector. The effects that radiation pulses having a predetermined pulse dose have on the skin, and particularly the maximum permissible radiation pulse dose at which undesirable side-effects on the skin do not occur, depend on the biological composition of the skin and differ from skin type to skin type. These effects predominantly depend on the quantity and distribution of melanin in the skin. These effects additionally depend on the quantity and distribution of blood, water and keratin in the skin. The value or condition of a large number of biophysical properties of the skin is at least partly determined by the quantity and distribution of said substances in the skin. By measuring, by means of said detector, the value or condition of a suitable biophysical property of the skin, i.e. a property that depends comparatively strongly on the quantity and distribution of said substances in the skin, it is possible to determine, by means of the control unit, a pulse dose from the radiation source that is safe for the skin type to be treated, for example on the basis of an empirically predetermined relation between said biophysical property and the permissible pulse dose. In this manner, a reliable protection against an overdose of the radiation pulses that is impermissible for the skin is achieved. As the maximum permissible pulse dose is automatically adapted to the skin type, the suitability of the device for the consumer market is increased.

[0007] A particular embodiment of a device in accordance with the invention is characterized in that the control unit determines, in operation, the permissible pulse dose before it activates the radiation source for treating the skin. As the control unit determines the permissible pulse dose before the radiation source is activated for treating the skin, protection against an impermissible overdose of the radiation pulses is provided throughout the skin treating process.

[0008] A further embodiment of a device in accordance with the invention is characterized in that the means comprise a comparator for comparing the measured value or condition of the biophysical property with a relation between the property and the permissible pulse dose, which relation is stored in a memory of the control unit. The relation stored in the memory is, for example, previously established in an accurate, empirical way. In this manner, an accurate and reliable protection against an impermissible overdose of the radiation pulses is provided.

[0009] A still further embodiment of a device in accordance with the invention is characterized in that the detector can suitably be used to measure a temperature of the skin resulting from exposure to a test radiation pulse having a predetermined pulse dose. In this embodiment, preferably before treating the skin, at least one test radiation pulse is generated having a predetermined, relatively low and safe pulse dose. The measured value of the temperature of the skin caused by exposure to this test radiation pulse is compared by the control unit with, for example, reference values that have been previously established for a large number of different skin types. As said reference values depend strongly on the skin type, the skin type and hence the permissible pulse dose of the radiation source are very accurately and reliably determined by using said detector, so that a very accurate and reliable protection against an impermissible overdose of the radiation pulses is provided.

[0010] A particular embodiment of a device in accordance with the invention is characterized in that the detector can suitably be used to measure a variation of the temperature as a function of time. The measured variation in temperature as a function of time, in particular the maximum temperature value that can be derived therefrom and the moment at which this maximum value is attained, enable the skin type and the permissible pulse dose of the radiation source to be derived in an even more reliable manner.

[0011] A further embodiment of a device in accordance with the invention is characterized in that, in operation, the radiation source generates the test radiation pulse. By virtue thereof, the number of parts of the device is limited, so that the structure of the device is simple.

[0012] Yet another embodiment of a device in accordance with the invention is characterized in that the radiation source generates a series of test radiation pulses having increasing, predetermined pulse doses, the detector measuring the temperature after each test radiation pulse generated, and the control unit terminating the series if the temperature reaches a predetermined critical value. It has been found that undesirable side-effects of the radiation pulses on the skin occur predominantly if the temperature of the skin caused by exposure to radiation pulses rises above a critical value. It has also been found that this critical value is substantially equal for the most common skin types. In this embodiment, the control unit increases the pulse dose of the test radiation pulses until the measured skin temperature has reached said critical value. In this manner, the permissible pulse dose is established in a reliable and accurate way. In this embodiment, the structure of the control unit is comparatively simple because the skin properties stored in the memory predominantly comprise only said critical temperature value.

[0013] A particular embodiment of a device in accordance with the invention is characterized in that the detector comprises an infrared sensor. By means of the infrared sensor the temperature of the skin can be accurately measured and without mechanical contact with the skin. The infrared sensor is comparatively inexpensive and has small dimensions, as a result of which the cost-price and the dimensions of the detector are limited.

[0014] A further embodiment of a device in accordance with the invention is characterized in that the detector can suitably be used to measure a scattering coefficient and/or absorption coefficient of the skin for the radiation. It has been found that there is a relation that can be clearly established between, on the one hand, the scattering coefficient and/or absorption coefficient of the skin for radiation of a predetermined wavelength and, on the other hand, the amount and distribution of melanin, keratin, blood and water in the skin. As a result, it is also possible to establish a clear relation between, on the one hand, said scattering coefficient and/or absorption coefficient and, on the other hand, the pulse dose from the radiation source that is permissible for the skin. Thus, using said detector, the pulse dose that is permissible for the skin can be established in a reliable manner.

[0015] A still further embodiment of a device in accordance with the invention is characterized in that the detector can suitably be used to measure a reflection coefficient of the skin for the radiation. It has been found that also a relation between on the one hand the reflection coefficient of the skin for radiation having a predetermined wavelength and, on the other hand, the quantity and distribution of melanin, keratin, blood and water in the skin can be clearly established. As a result, it is also possible to establish a clear relation between said reflection coefficient and the pulse dose from the radiation source that is permissible for the skin. Thus, by means of said detector, it is also possible to reliably determine the pulse dose that is permissible for the skin.

[0016] A particular embodiment of a device in accordance with the invention is characterized in that the detector is provided with a light sensor and a light source for light of a predetermined wavelength, which light source is optically separated from the light sensor. As the light source is optically separated from the light sensor, the light from the light source cannot directly reach the light sensor. In an embodiment wherein the light source and the light sensor are situated, in operation, so as to be in contact with the surface of the skin, however, the light from the light source can reach the light sensor by scattering in the skin. In an embodiment where the light source and the light sensor are situated, in operation, at a distance from the surface of the skin, the light from the light source can reach the light sensor by reflection via the surface of the skin. In this manner, using the detector, the scattering coefficient and/or absorption coefficient of the skin for said light, and the reflection coefficient of the skin for said light, respectively, can be measured in a reliable manner.

[0017] A further embodiment of a device in accordance with the invention is characterized in that the light source is an LED and the light sensor is a photodiode. Said LED and photodiode are comparatively inexpensive and have small dimensions, as a result of which the cost-price and dimensions of the detector are limited.

[0018] A still further embodiment of a device in accordance with the invention is characterized in that the device is a hair removing device, wherein the radiation source comprises a laser source, and wherein the device is further provided with an adjustable laser beam manipulator for positioning a laser beam supplied, in operation, by the laser source in a target position on the skin to be treated. In this embodiment of the device in accordance with the invention, the invention becomes effective in a particular way since the laser beam generated by the laser source has a comparatively high intensity and hence, in the event of an overdose, could readily lead to undesirable side-effects on the skin if no additional measures are taken.

[0019] A particular embodiment of a device in accordance with the invention is characterized in that the device is a hair removing device, wherein the radiation source comprises a flashlight for generating light pulses, and wherein the device is further provided with a directing element for directing the light pulses to an exit opening provided in the housing. In this embodiment of the device in accordance with the invention, the invention also becomes effective in a particular way as the light pulses generated by the flashlight have a comparatively high intensity and hence, in the event of an overdose, could readily lead to undesirable side-effects on the skin if no additional measures are taken.

[0020] In the following, embodiments of a device for treating skin by means of radiation pulses according to the invention will be explained in detail as shown in the figures, wherein:

[0021] **FIG. 1** diagrammatically shows a first example of a device in accordance with the invention,

[0022] **FIG. 2** diagrammatically shows a detector of the device in accordance with **FIG. 1**,

[0023] **FIG. 3** diagrammatically shows a second example of a device in accordance with the invention,

[0024] **FIG. 4** diagrammatically shows a detector of the device in accordance with **FIG. 3**,

[0025] **FIG. 5** diagrammatically shows a detector of a third example of a device in accordance with the invention, and

[0026] **FIG. 6** diagrammatically shows a fourth example of a device in accordance with the invention.

[0027] **FIG. 1** diagrammatically shows a first example of a device **1** in accordance with the invention for treating skin by means of radiation pulses, said device being a hair removing device, in particular a laser epilation device, by means of which hairs present on the skin are removed for a comparatively long period of time or permanently by means of laser pulses. Said device **1** comprises a housing **3** with a handle **5**, so that the device **1** is portable and can be placed on or moved over skin **7** to be treated. The housing **3** accommodates a radiation source, in particular a laser source **9** such as a diode laser, and an adjustable laser beam manipulator **11** by means of which a laser beam **13** generated, in operation, by the laser source **9** can be positioned, via an exit opening **15** provided in the housing **3**, on the skin **7** in a target position **16**. In the example shown, the laser beam manipulator **11** comprises a first adjustable tilting mirror **17** and a second adjustable tilting mirror **19**, which are both arranged at an angle of approximately 45° with respect to a flat skin contact element **21**, in which the exit opening **15** is situated and which, in the example shown, forms a bottom wall of the housing **3**. By means of a first actuator **23** and a second actuator **25**, the tilting mirrors **17** and **19**, respectively, can be tilted about, respectively, a first tilt axis **27**, which extends in the plane of the first tilting mirror **17** and is directed substantially parallel to the second skin contact element **21**, and a second tilt axis **29**, which extends in the plane of the second tilting mirror **19** and intersects the first tilt axis **27** substantially perpendicularly. By tilting the two tilting mirrors **17** and **19**, the target position **16** of the laser beam **13** can be displaced over the skin **7** in a direction parallel to an X-direction and a Y-direction extending perpendicularly thereto, both directions being parallel to the skin contact element **21**.

[0028] To determine successive target positions, the device **1** is provided, in the example shown, with an image sensor **31**, such as a CCD image sensor or CMOS image sensor, which records an image of the part of the skin **7** that is situated directly in front of the exit opening **15**, by means of an auxiliary lamp **33** and a transparent mirror **35**. The device **1** further comprises a control unit **37** to which the image sensor **31** supplies an electrical signal uS which corresponds to the image recorded by the image sensor **31**. The control unit **37** comprises a processor by means of which, on the basis of the image recorded, the positions of the hair roots **39** of the hairs **41** present on said part of the skin **7** are determined on said part of the skin **7**. The control unit **37** controls the two actuators **23** and **25** by means of, respectively, an electrical signal u_{M1} and an electrical signal u_{M2}, in such a manner that the laser beam **13** is successively positioned in a series of target positions that correspond to the positions of the hair roots **39** thus determined. In each target position **16**, the laser source **9** is activated by the control unit **37** by means of an electrical signal UL so as to generate a laser pulse having a predetermined pulse dose, i.e. during a predetermined period of time and with a predetermined intensity. The intensity of the pulse dose is so high that the hair roots **39** present are successively heated in such a manner that they die. As the target positions are automatically determined, the device **1** can particularly suitably be used for the consumer market, i.e. for non-professional users. For a detailed explanation of the operation of the device **1**, which is only briefly described herein, reference is made to WO-A-00/62700.

[0029] The above-mentioned pulse dose is previously established in an empirical way and is so high that the hair types that are most common in practice die under the influence of the laser pulses. In accordance with the invention, the device **1** comprises, however, a protection against an impermissible overdose of the laser pulses that could have undesirable side-effects on the skin present around the hair roots **39**, such as skin irritations, pain and, in the case of sensitive skin types, even small burns or pigment changes. The effects of laser pulses having a predetermined pulse dose on the skin, and in particular the pulse dose of the laser pulses that is permissible for the skin and does not lead to undesirable side-effects, depend on the biological composition of the skin and differ from skin type to skin type. These effects depend predominantly on the quantity and distribution of melanin in the skin and, furthermore, on the quantity and distribution of blood, water and keratin in the skin. In general, the permissible pulse dose decreases as the amount of these substances in the skin increases, particularly as the amount of melanin increases. This can be attributed to the fact that laser light is absorbed comparatively strongly by, in particular, melanin, so that the temperature of the skin increases comparatively strongly. It has been found that undesirable side-effects of the laser pulses on the skin occur predominantly if the temperature of the skin rises above a critical value. It has further been found that this critical value is substantially equal for the skin types that are most common, namely approximately 52° C.

[0030] In the device **1**, protection against an impermissible overdose of the laser pulses is achieved by using a detector **43** which can suitably be employed to measure a temperature of the skin resulting from exposure to a series of test laser pulses. As is shown in **FIG. 2**, the detector **43** comprises, in the example shown, a detector housing **45** which is attached, at some distance from the skin contact element **21**, to an upright edge **47** of the exit opening **15**. The detector housing **45** accommodates an infrared sensor **49**. A Fresnel lens **51** is situated between the infrared sensor **49** and the exit opening **15**. The control unit **37** establishes, in operation, the permissible pulse dose before said control unit **37** activates the laser source **9** so as to remove the hairs **41** present. For this purpose, the control unit **37** controls the laser beam manipulator **11** in such a manner that the target position **16'** of the laser beam **13'** is initially situated directly in front of the detector **43**, as shown in **FIG. 2**. Subsequently, the control unit **37** controls the laser source **9** in such a way that the laser source **9** generates a series of test laser pulses having increasing, predetermined pulse doses. After each generated test laser pulse, the detector **43** measures the temperature of the skin in the target position **16'**, which target position is approximately in the focus of the Fresnel lens **51**. The Fresnel lens **51** is comparatively thin and made of a material having a comparatively low absorptivity for infrared radiation, polyethylene in the example shown, so that as much heat as possible of the skin present in the target position **16'** is focused on the infrared sensor **49**.

The detector **43** generates an electrical signal u_T, which corresponds to the temperature measured and is supplied to the control unit **37**. The control unit **37** subsequently ends the series of test laser pulses if the temperature measured reaches said critical value of 52° C. or a safe limiting value of, for example, 51° C. The control unit **37** determines that the pulse dose at which said critical value or limiting value of the temperature is reached is the permissible pulse dose. As said critical value of the temperature is a reliable limiting value as regards the development of undesirable side-effects of the laser pulses on the skin, the permissible pulse dose is accurately and reliably determined in the manner described hereinabove. Said critical value or limiting value of the skin temperature is the only property of the skin that is to be stored in a memory of the control unit **37**, so that the structure of the control unit **37** is comparatively simple. By means of the infrared sensor **49**, the temperature of the skin is accurately determined. Said infrared sensor **49** is comparatively inexpensive and has limited dimensions, as a result of which the cost-price and the dimensions of the detector **43** are limited. In the example shown, the detector **43** measures a variation of the temperature of the skin as a function of time. The value of the temperature, which is compared with the critical value by the control unit **37**, is a maximum value of the temperature that is determined by the control unit **37** from the measured variation of the temperature. In this manner, the reliability and accuracy with which the permissible pulse dose is determined is further increased. It is noted that the invention also comprises embodiments wherein determining the maximum value of the temperature from the measured temperature variation is carried out by a processor that forms part of the detector **43**. The invention further includes embodiments wherein the test laser pulses are generated by an independent light source whose frequency corresponds to the frequency of the laser source **9**. As, in the device **1**, the test laser pulses are generated by the laser source **9**, the number of components of the device **1** is limited, resulting in a simple structure of said device **1**. As the control unit **37** thus determines the permissible pulse dose before activating the laser source **9** to remove the hairs **41**, protection against an impermissible overdose of the laser pulses is provided during the entire hair removing process.

[0031] It is noted that the invention also comprises embodiments wherein the detector **43** is employed in a different way to establish the permissible pulse dose from the laser source **9**. An example of such a different way of employing the detector **43** is an embodiment wherein, prior to the hair removing process, the laser source **9** generates one or a comparatively small number of test laser pulses having a predetermined, comparatively low, safe pulse dose, and wherein the temperature measured by means of the detector **43**, which is the temperature of the skin resulting from exposure to these test laser pulses, is compared by the control unit **37** with reference temperatures which are previously, empirically established for a large number of skin types by exposing these skin types to a comparable test laser pulse. In such an embodiment, the control unit **37** comprises a memory wherein said reference temperatures are stored, and a comparator that compares the skin temperature measured by the detector **43** with said reference temperatures. The control unit **37** subsequently determines that the permissible pulse dose is the permissible pulse dose associated with a skin type whose reference temperature corresponds to the measured temperature. Another example of a different way of employing the detector is an embodiment wherein the variation in temperature of the skin caused by exposure to a predetermined test laser pulse and measured by the detector **43** is used by the control unit **37** to determine, apart from the maximum temperature, the moment at which the maximum temperature is achieved, and in which embodiment the control unit **37** compares the measured maximum temperature and the measured moment with reference temperatures and reference moments which are previously empirically established for a large number of skin types. As the above-mentioned reference temperatures and reference moments can be accurately determined and, in addition, depend substantially on the skin type, the permissible pulse dose can be accurately and reliably determined in the above-mentioned alternative embodiments.

[0032] In the above-described embodiments of a device in accordance with the invention, the permissible pulse dose of the laser pulses is determined on the basis of a measured temperature of the skin caused by exposure to a predetermined test laser pulse. The invention also comprises embodiments wherein the permissible pulse dose is determined by measuring another biophysical property of the skin. In the second example of a device **53** in accordance with the invention, as shown in **FIG. 3**, the permissible pulse dose is determined by measuring a scattering coefficient and/or absorption coefficient of the skin for light of a predetermined wavelength. The device **53**, like the device **1** discussed hereinabove, is a laser epilation device and, in **FIG. 3**, parts of the device **53** corresponding to parts of the device **1** are indicated by means of corresponding reference numerals. The device **53** differs mainly from the device **1** in that the device **53** is provided with a detector **55**, instead of the above-discussed detector **43**, which detector **55** can suitably be used to measure the scattering coefficient and/or absorption coefficient of the skin for light of a predetermined wavelength. Said wavelength is, for example, equal to the wavelength of the laser source **9'** but may also be different, as is the case in the example shown. The detector **55** is provided in the skin contact element **21'** near the exit opening **15'**. As is shown in **FIG. 4**, the detector **55** comprises, in the example shown, two light sources **57**, **59**, which are LEDs in the example shown, emitting light of two different, predetermined wavelengths, and a single light sensor **61**, which is a photodiode in the example shown, which is arranged next to the light sources **57**, **59**. The light sources **57**, **59** and the light sensor **61** are each provided in a separate chamber **63**, **65**, **67** of the detector **55**, as a result of which the light sensor **61** is optically separated from the light sources **57**, **59**, i.e. light from the light sources **57**, **59** cannot directly reach the light sensor **61**. On the other hand, as is shown in **FIG. 4**, light beams **69**, **71** from the light sources **57**, **59** can reach the light sensor **61** through scattering in the skin if, in operation, the device **53** is in contact, via the skin contact element **21'**, with the skin **7'** to be treated. The detector **55** further comprises an electrical circuit **73** which successively activates the two light sources **57**, **59** for a short period of time by means of two electrical signals u_{LED1} and u_{LED2}. As a result, the circuit **73** successively receives two electrical signals u_{PD1} and u_{PD2} from the light sensor **61**, which electrical signals correspond to the amounts of light received by the light sensor **61**, through scattering in the skin **7'**, from the two light sources **57** and **59**, respectively. The circuit **73** subsequently determines the values of the scattering coefficient and/or absorption coef-

ficient of the skin **7'** for said two different wavelengths of the two light sources **57**, **59** by comparing the amounts of light received with the amounts of light generated by the light sources **57**, **59** and determined by the signals u_{LED1} and u_{LED2}. The circuit **73** converts the values of the scattering coefficient and/or absorption coefficient thus measured into an electrical signal u_{CO} which, as shown in **FIG. 3**, is received by the control unit **37'** of the device **53**. The control unit **37** comprises a comparator, not shown in the Figures, which compares the measured values of the scattering coefficient and/or absorption coefficient with reference values which have been previously, empirically established for a large number of skin types and which are stored in a memory of the control unit **37'**. The control unit **37'** subsequently determines that the permissible pulse dose from the laser source **9'**, is the pulse dose which is stored in the memory of the control unit **37'** for the skin type whose reference values correspond to the measured values of the scattering coefficient and/or absorption coefficient. As there is a clear relation between, on the one hand, the scattering coefficient and/or absorption coefficient of the skin for light of a predetermined wavelength and, on the other hand, the quantity and distribution of melanin, keratin, blood and water in the skin, there is also a clear relation between, on the one hand, said scattering coefficient and/or absorption coefficient and, on the other hand, the pulse dose from the laser source **9'** that is permissible for the skin. In this manner, the pulse dose that is permissible for the skin can be reliably determined by means of the detector **55**. By means of the detector **55**, the values of the scattering coefficient and/or absorption coefficient are measured for two different wavelengths of the light, green light in the example shown, which has a comparatively short wavelength, and red light which has a comparatively long wavelength. The combination of the values of these coefficients for said two types of light is very specific to the skin type, so that the permissible pulse dose can be established in a very accurate manner. It is noted, however, that the invention also comprises embodiments with a detector that measures the scattering coefficient and/or absorption coefficient for only one value or for more than two values of the wavelength. It is further noted that the structure of the detector **55** is simple since the light sensor **61** is shared by the two light sources **57**, **59**. However, the invention also comprises embodiments wherein a separate light sensor is used for each light source **57**, **59**, which light sensor is, for example, sensitive only to light of the wavelength of the associated light source. The invention further also comprises embodiments wherein the detector is provided with a single light source and with a number of light sensors co-operating with the light source, which light sensors are arranged at mutually different distances from the light source. Such a detector is capable of more accurately measuring the scattering and/or absorption coefficient because information about the variation of said coefficients as a function of the depth below the skin surface can be derived from the differences between the amounts of light measured by the individual light sensors. The LEDs and photodiode used in the detector **55** are comparatively simple and have small dimensions, as a result of which both the cost-price and the dimensions of the detector **55** are limited.

[0033] In a third example of a device **53'** in accordance with the invention, the biophysical property, on the basis of which the permissible pulse dose of the laser pulses is established, is a reflection coefficient of the skin **7'** for light of a predetermined wavelength. As shown in **FIG. 3**, the device **53'** is substantially equal to the above-described device **53** in accordance with the second example. The device **53'** mainly differs from the device **53** in that the device **53'** is provided with a detector **75**, instead of the detector **55**, which can suitably be used to measure the reflection coefficient of the skin **7'** for light of a predetermined wavelength. Therefore, in the following, only the detector **75** of the device **53'** will be discussed, which detector is diagrammatically shown in **FIG. 5**. The detector **75** comprises, in the example shown, two light sources **77**, **79** for light having two different, predetermined wavelengths, which light sources are two LEDs in the example shown. The detector **75** further comprises a single light sensor **81**, which is a photodiode in the example shown, that is arranged between the two light sources **77**, **79**. The light sources **77**, **79** and the light sensor **81** are each arranged in a separate chamber **83**, **85**, **87** of the detector **75**, as a result of which the light sensor **81** is optically separated from the light sources **77**, **79**. As shown in **FIG. 5**, light beams **89**, **91** from the light sources **77**, **79** are capable of reaching the light sensor **81** through reflection via the surface of the skin **7'**. The detector **75** further comprises an electrical circuit **93** which successively activates the two light sources **77**, **79** for a short period of time by means of two electrical signals u'_{LED1} and u'_{LED2}. As a result, the circuit **93** successively receives two electrical signals u'_{PD1} and u'_{PD2} from the light sensor **81**, which correspond to the amounts of light received by the light sensor **81** from the two light sources **77** and **79**, respectively, through reflection via the skin **7'**. The circuit **93** subsequently establishes the values of the reflection coefficient of the skin **7'** for said two different wavelengths of the light sources **77** and **79** by comparing the amounts of light received with the amounts of light generated by the light sources **77**, **79**, which amounts of light are determined by the signals u'_{LED1} and u'_{LED2}. The values of the reflection coefficient thus measured are converted by the circuit **93** into an electrical signal u'_{CO} which, as shown in **FIG. 3**, is received by the control unit **37'** of the device **53'**. The control unit **37'** comprises a comparator, not shown in the Figures, which compares the measured values of the reflection coefficient with reference values, which have been previously empirically established for a large number of skin types and stored in a memory of the control unit **37'**. The control unit **37'** determines that the permissible pulse dose from the laser source **9'** is the pulse dose that is stored in the memory of the control unit **37'** for the skin type whose reference values correspond to the measured values of the reflection coefficient. As there is a clear relation between, on the one hand, the reflection coefficient of the skin for light of a predetermined wavelength and, on the other hand, the quantity and distribution of melanin, keratin, blood and water in the skin, there is also a clear relation between, on the one hand, said reflection coefficient and, on the other hand, the pulse dose from the laser source **9'** that is permissible for the skin. In this manner, the pulse dose that is permissible for the skin **7'** can be reliably determined by means of the detector **75**. In the example shown, this reliability is further improved in that the detector **75** measures the reflection coefficient for two different values of the wavelength, i.e., in the example, yellow light, which has a comparatively short wavelength, and red light which has a comparatively long wavelength. It is noted that the invention also comprises modifications of

the detector **75**, such as modifications as described hereinabove with respect to the detector **55**.

[**0034**] In the above-discussed examples of a device **1**, **53**, **53'** in accordance with the invention, the device **1**, **53**, **53'** always comprises a detector **43**, **55**, **75** for measuring a biophysical property of the skin **7**, **7'**, the control unit **37**, **37'** establishing a pulse dose from the laser source **9**, **9'** that is permissible for the skin **7**, **7'** on the basis of the value of the property measured by means of the detector **43**, **55**, **75**. In the device **1**, the measured biophysical property is the temperature of the skin **7**, **7'** resulting from exposure to at least one test radiation pulse of a predetermined pulse dose, in the device **53**, the biophysical property is the scattering and/or absorption coefficient of the skin **7**, **7'** for light of a predetermined wavelength, and in the device **53'**, the biophysical property is the reflection coefficient of the skin **7**, **7'** for light of a predetermined wavelength. It is noted that the invention also comprises embodiments wherein a different type of biophysical property is measured by means of a suitable detector, on the basis of which biophysical property the control unit determines the permissible pulse dose. An alternative biophysical property is, for example, the electrical resistance of the skin, but the invention is not limited to this example nor to the above-mentioned examples. It is noted that, in general, the best results are achieved if a biophysical property is measured, as the basis for establishing the permissible pulse dose, which biophysical property is related to the quantity and distribution of the above-mentioned substances in the skin, in particular melanin, the relation of which to the permissible pulse dose can be accurately empirically established beforehand.

[**0035**] The above-discussed devices **1**, **53** and **53'** in accordance with the invention are laser epilation devices. However, the invention also comprises other types of hair removing devices wherein hairs are shortened or removed by means of radiation pulses. An example of such hair removing devices is a laser shaver. The operation of such a laser shaver substantially corresponds to the operation of the above-discussed laser epilation devices, however, the target position of the laser beam of the laser shaver is not in the hair root but in a position on the hair just above the surface of the skin. Another type of hair removing device, to which for example the invention applies, is a flashlight epilation device. The fourth example of a device **95** in accordance with the invention, as shown in **FIG. 6**, is an example of such a flashlight epilation device. The device **95** comprises a housing **97** wherein a frame **99** is arranged. A chamber **101** is provided in the frame **99**, in which chamber a flashlight **103** is arranged as the radiation source, which radiation source is a Xenon lamp in the example shown. The chamber **101** is filled with a cooling liquid for the flashlight, the cooling liquid being water in the example shown. The chamber **101** has a parabolically-shaped wall **105**, which is covered with a reflective material and thus serves as a reflector or directing element for the light generated by the flashlight. The chamber **101** is shut off by a transparent plate **107**, which plate is a long-wave band-pass filter in the example shown. The device **95** further comprises an optical waveguide **109** which opens into an exit opening **111**. Around the exit opening **111** there is provided a skin contact element **113** wherein, near the exit opening **111**, a detector **115** is provided of a type similar to the above-described detector **43**, **55** or **75**. In operation, the flashlight **103** generates a series of light pulses having a predetermined pulse dose, i.e. a predetermined pulse duration and intensity. The light pulses are directed to the exit opening **111** by the wall **105** and reach the exit opening **111** via the transparent plate **107** and the optical waveguide **109**. The frequency of the light pulses is such that the light pulses are absorbed, in particular, by the hair roots present in the skin, so that the hair roots are heated and die. For a more detailed explanation of the operation of the device **95**, which is only briefly described herein, reference is made to EP-A-0 885 629. The pulse dose is such that a predetermined pulse dose that is the maximum permissible pulse dose for the skin is not exceeded. The maximum permissible pulse dose is established, in a manner comparable to that used in the above-described examples **1**, **53**, **53'**, by a control unit, not shown, of the device **95** on the basis of a measurement of a biophysical property of the skin, which measurement is carried out by means of the detector **115**.

[**0036**] The devices **1**, **53**, **53'** and **95** discussed hereinabove all are hair removing devices. It is finally noted that the invention also comprises other types of devices for treating skin by means of radiation pulses. Examples of such devices are devices for the medical treatment of skin by means of radiation pulses, such as by means of laser pulses, light flashes, or other types of radiation pulses having a comparatively high intensity. Such devices are used, for example, for treating birthmarks, such as naevus pigmentosus and naevus vinosus, present on the skin, psoriasis, or aberrations of blood vessels present in the skin. Other examples of such devices include devices for skin-rejuvenation cures by means of radiation pulses.

1-14. (canceled)

15. A device for treating skin with a radiation pulse, the device comprising:

imaging means for imaging the skin to determine at least one target position on the skin;

testing and measuring means for testing the skin subsequent to an imaging of the skin to thereby measure at least one biophysical property of the skin;

dose determining means for determining a maximum pulse dose of the radiation pulse for the skin as a function of at least one measurement of the least one biophysical property of the skin; and

pulse generating means for generating the radiation pulse with a treatment pulse dose equal to or less than the maximum pulse dose.

16. The device of claim 15, wherein the testing and measuring means measures a temperature of the skin.

17. The device of claim 15, wherein the testing and measuring means measures a variation of a temperature of the skin.

18. The device of claim 15, wherein the testing and measuring means compares a temperature of the skin as related to a predetermined critical value.

19. The device of claim 15, wherein the testing and measuring means measures a scattering coefficient of the skin.

20. The device of claim 15, wherein the testing and measuring means measures an absorption coefficient of the skin.

21. The device of claim 15, wherein the testing and measuring means measures a reflection coefficient of the skin.

22. The device of claim 15, wherein the treatment pulse dose removes hair from the skin without substantially effecting the skin.

23. The device of claim 15, wherein the pulse generating stage includes a laser source as a source of the radiation pulse.

24. The device of claim 15, wherein the pulse generating stage includes a flashlight as a source of the radiation pulse.

25. The device of claim 15, wherein the radiation pulse is one of a plurality of radiation pulses and the pulse generating means is a means for generating all of the plurality of treatment pulse doses during a treatment of the skin with a treatment pulse dose equal or less than the maximum pulse dose.

26. The device of claim 15, wherein the device comprises an exit opening, the imaging means images the skin opposite the exit opening, the radiation pulse is one of a plurality of radiation pulses and all of the plurality of the treatment pulses during a treatment of the skin are emitted through the exit opening.

27. A method for treating skin with a radiation pulse, the method comprising

an imaging step for imaging the skin to determine at least one target position on the skin;

a testing and measuring step for testing the skin subsequent to an imaging of the skin to thereby measure at least one biophysical property of the skin;

a dose determining step for determining a maximum pulse dose of the radiation pulse for the skin as a function of at least one measurement of the least one biophysical property of the skin; and

a pulse generating step for generating the radiation pulse with a treatment pulse dose equal to or less than the maximum pulse dose.

28. The method of claim 27, wherein the testing and measuring step measures a temperature of the skin.

29. The method of claim 27, wherein the testing and measuring step measures a variation of a temperature of the skin.

30. The method of claim 27, wherein the testing and measuring step compares a temperature of the skin as related to a predetermined critical value.

31. The method of claim 27, wherein the testing and measuring step measures a scattering coefficient of the skin.

32. The method of claim 27, wherein the testing and measuring step measures an absorption coefficient of the skin.

33. The method of claim 27, wherein the testing and measuring step measures a reflection coefficient of the skin.

34. The method of claim 27, wherein the treatment pulse dose removes hair from the skin without substantially effecting the skin.

35. The method of claim 27, wherein a source of the radiation pulse is a laser source.

36. The method of claim 27, wherein a source of the radiation pulse is a flashlight.

37. The method of claim 27, wherein the radiation pulse is one of a plurality of radiation pulses and the pulse generating means is a means for generating all of the plurality of treatment pulse doses during a treatment of the skin with a treatment pulse dose equal or less than the maximum pulse dose.

38. The method of claim 27 comprising a radiation dose administering step, wherein the radiation dose administering step and the imaging step are effected through the same exit opening of a housing.

39. A device for treating skin with a radiation pulse, the device comprising:

an imaging stage operable to image the skin to determine at least one target position on the skin;

a controller;

a testing and measuring stage operable by the controller to test the skin subsequent to an imaging of the skin to thereby measure at least one biophysical property of the skin;

a dose determining stage operable by the controller to determine a maximum pulse dose of the radiation pulse for the skin as a function of at least one measurement of the least one biophysical property of the skin; and

a pulse generating stage operable by the controller to generate the radiation pulse with a treatment pulse dose equal to or less than the maximum pulse dose.

40. The device of claim 39, wherein the controller operates the testing and measuring stage to measure temperature of the skin.

41. The device of claim 39, wherein the controller operates the testing and measuring stage to measure a variation of a temperature of the skin.

42. The device of claim 39, wherein the controller operates the testing and measuring stage to compare a temperature of the skin as related to a predetermined critical value.

43. The device of claim 39, wherein the controller operates the testing and measuring stage to measure a scattering coefficient of the skin.

44. The device of claim 39, wherein the controller operates the testing and measuring stage to measure an absorption coefficient of the skin.

45. The device of claim 39, wherein the controller operates the testing and measuring stage to measure a reflection coefficient of the skin.

46. The device of claim 39, wherein the treatment pulse dose removes hair from the skin without substantially effecting the skin.

47. The device of claim 39, wherein the pulse generating stage includes a laser source as a source of the radiation pulse.

48. The device of claim 39, wherein the pulse generating stage includes a flashlight as a source of the radiation pulse.

49. The device of claim 39, wherein the radiation pulse is one of a plurality of radiation pulses and the pulse generating stage is a operable by the controller to generate all of the plurality of treatment pulse doses during a treatment of the skin only with a treatment pulse dose equal or less than the maximum pulse dose.

50. The device of claim 39, the device comprising an exit opening, the imaging stage being operable to image the skin opposite the exit opening, the radiation pulse being one of a plurality of treatment pulses, all of the plurality of the treatment pulses during a treatment of the skin being emitted through the exit opening.

* * * * *