April 20, 1965 D. F. REAHARD 3,178,778

REFRIGERATOR SEAL

Filed Oct. 10, 1961

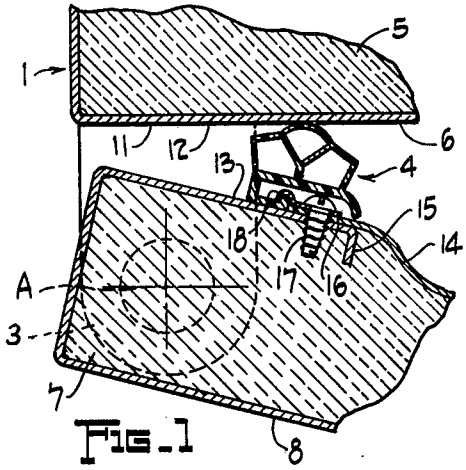

FIG. 1

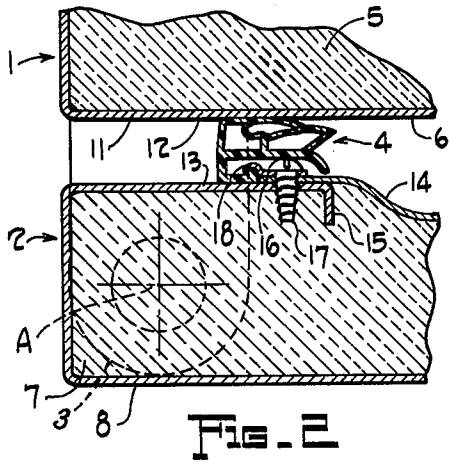

FIG. 2

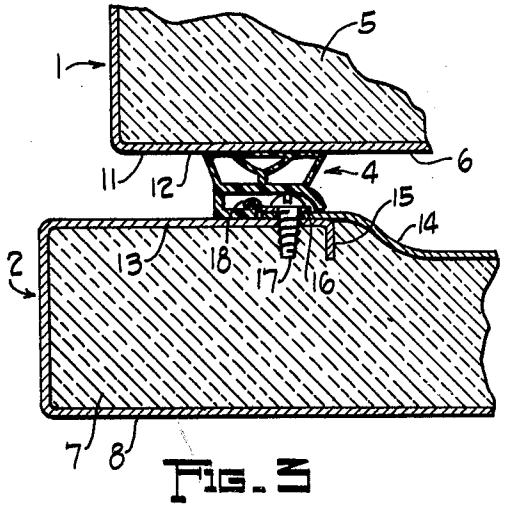

FIG. 3

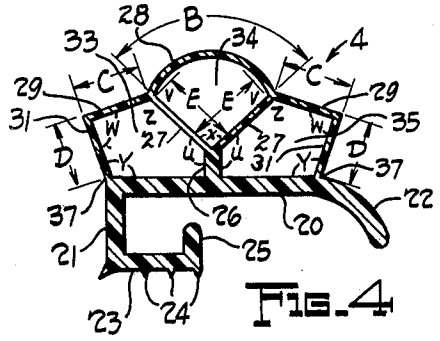

FIG. 4

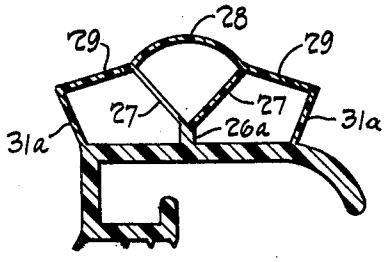

FIG. 5

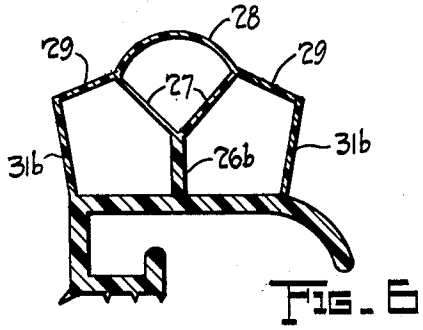

FIG. 6

INVENTOR.
DANIEL F. REAHARD

BY Bosworth, Sessions, Herrstrom and Knowles
ATTORNEYS.

United States Patent Office 3,178,778 Patented Apr. 20, 1965

3,178,778

REFRIGERATOR SEAL

Daniel F. Reahard, Seymour, Ind., assignor to The H. O. Canfield Company, Inc., Bridgeport, Conn., a corporation of Connecticut

Filed Oct. 10, 1961, Ser. No. 144,205
5 Claims. (Cl. 20—69)

This invention relates to resilient gaskets formed of plastic material, and more particularly to gaskets for effecting a compressive seal between two relatively movable members.

While gaskets embodying the invention may advantageously be employed for various purposes, they provide exceptional advantages when used in refrigerators between the door and the cabinet, and hence they will be discussed in connection with such use.

For best results, a gasket for this purpose should perform several functions and satisfy several important requirements. It should cushion the door on closing, prevent passage of air through the junction between the door and the cabinet after the door has been closed, and provide heat insulation at such junction. It should perform these functions even though there are irregularities in the surfaces of either or both the door and the cabinet at the junction; such irregularities result from ordinary refrigerator manufacturing operations and cannot be avoided without excessive costs.

Moreover, the sealing gasket should provide an effective seal and heat barrier, notwithstanding surface irregularities, despite the fact that when the door is closed and opened the gasket in the vicinity of the hinge is subjected to forces extending transversely of the gasket which tend to impart a wiping action to the gasket. This condition is more pronounced when the hinge support for the door is one in which the axis of the hinge pivot is substantially offset from the plane of the cabinet surface to be contacted and sealed by the gasket, as is usually the case in modern refrigerators; these transverse forces and the tendency toward the wiping action occur because, as the door approaches its closed position, the offset pivot axis causes the gasket-supporting surface of the door in the vicinity of the hinge to move transversely of the surface of the cabinet against which the gasket is to press. Such transverse movement may approach 50% of the prependicular movement during the last few degrees of swinging movement of the door on closing. Unless special precautions are taken, as in the gasket of the invention, the sealing wall of the gasket in the vicinity of the hinge will wrinkle or become abraded; its sealing and heat insulation actions will be largely if not completely impaired.

Despite adverse factors such as the above indicated irregularities in the refrigerator surface to be sealed and the transverse movement of the door in the vicinity of the hinged portion of the refrigerator, the gasket should effectively perform its cushioning, sealing and heat insulating functions even under very low sealing pressures. This requirement arises because of the need to make modern refrigerators so that they can be opened by a small force exerted on the interior of the refrigerator door, to insure against hazards of children being trapped inside the refrigerator.

In addition to all of the above, the gasket should maintain its resiliency, and should rapidly recover its uncompressed shape when the refrigerator door is opened, throughout a long life, so that it can fully perform the above indicated functions for a long period of use without replacement. It is also necessary that the gasket should be capable of manufacture and installation at competitive low costs.

It is an object of the invention to provide a gasket of

the tubular air-filled type which can satisfy all of the above requirements. Another object is the provision of a tubular air filled gasket which is capable of cushioning the closing of a refrigerator door and, after the door is closed, is capable of making and maintaining an effective seal and providing good heat insulation under low sealing pressures. A further object is the provision of such a gasket which substantially or completely eliminates abrasion or wrinkling at the hinged side of the refrigerator opening which provides good sealing. Another object is to provide such a gasket which can be manufactured at low cost, and which has excellent resiliency and recovery throughout a long life.

These and other objects and advantages of the invention will be apparent to those skilled in the art from the following description and claims, and from the drawings in which:

FIGURE 1 is a fragmentary horizontal sectional view of a portion of the front hinged side of a refrigerator, showing the cabinet, the refrigerator door, and a gasket embodying and representing the best known mode of practicing the invention, the gasket being fixed to the refrigerator door and initially engaging the front face of the refrigerator cabinet as the door is being closed;

FIGURE 2 is a fragmentary horizontal sectional elevation, similar to that of FIGURE 1 and to the same scale, showing the hinged side of the refrigerator with the door completely closed and the gasket compressed in sealing relation;

FIGURE 3 is another fragmentary horizontal sectional view of a portion of the front unhinged side of the same refrigerator, showing the door as fully closed and the gasket of FIGURES 1 and 2 in compressed sealing relation;

FIGURE 4 is a sectional view to an enlarged scale showing the cross section of the gasket of FIGURES 1, 2 and 3 before installation;

FIGURE 5 is a sectional view, similar to that of FIGURE 4 and to the same scale, showing the cross section of a modified form of gasket embodying the invention; and

FIGURE 6 is a sectional view, similar to FIGURES 4 and 5 and to the same scale, showing the cross section of another modified form of a refrigerator gasket embodying the invention.

FIGURES 1, 2 and 3 show portions of a conventional home refrigerator comprising a cabinet **1** and a door **2** hingedly supported at one edge of the cabinet by hinge means **3**, shown in FIGURES 1 and 2, to swing horizontally about the vertical axis A. The door carries a gasket **4** embodying the invention. The refrigerator cabinet **1** is constructed in the usual manner with a thick layer of insulating material **5** covered by an outer sheet steel shell **6**, and the door **2** is similarly constructed in the conventional manner with a relatively thick insulating layer **7** covered by an outer sheet steel shell **8**.

The shell **6** of the cabinet **1** has a flat vertical wall portion **11** extending completely around the door opening to provide planar sealing surface **12** adapted to be engaged by the gasket **4** in sealing relation; the axis A of the hinge means is substantially offset from or spaced in front of this surface, as is apparent from FIGURES 1 and 2. The inner wall of the door shell **8** includes a flat outer peripheral portion **13** and a panel **14** which peripherally overlaps the latter. The wall portion **13** of the door shell **8** is substantially parallel to the wall portion **11** of the cabinet when the door is latched in its fully closed position, as shown in FIGURES 2 and 3. When the door is in this position, there is a relatively wide space between the wall portions **11** and **13** of the cabinet and door, which space may have a horizontal width of ½" or more in a standard size refrigerator.

A stiffening flange **15** on and integral with the portion **13** of the door shell extends toward the inside of the door and the overlapping edges of the portions **13** and **14** are covered by and carry a sheet metal gasket-holding strip **16** which extends entirely around the door opening to hold the gasket **4** in place. The strip **16** is held in place by screws **17** which are threaded into and also hold together the overlapping edges of the metal wall portions **13** and **14**. The gasket-holding strip **16** of uniform cross section, is flat for a major portion of its width, but has a rolled or flanged edge portion **18** of generally arcuate hook-shaped cross section extending outwardly beyond the edge of the wall panel portion **14** for clamping the gasket **4** in place. The rolled edge of the clamping strip provides a channel which receives an edge bead formed integrally on the gasket, locks the latter in predetermined position on and relative to the door, as will appear.

With the exception of the gasket **4**, the refrigerator structure described above is conventional.

The gasket **4** of the invention, of which the cross section throughout its length is shown enlarged in FIGURE 4, is shaped to function effectively and satisfy all requirements outlined above when made in one piece as an extrusion of one of the pliable polymeric materials generally used for refrigerator gaskets, such as homopolymers of vinyl chloride, copolymers of vinyl chloride and vinyl acetate, polyethylene, polyurethane, or similar extruded materials having the necessary flexibility. Various rubbers and rubbery compositions may also be used. The preferred pliable gasket material is a flexible polyvinyl chloride composition embodying a suitable plasticizer and other compounding ingredients such as pigments, fillers, antioxidants, heat and light stabilizers and the like as is well known in the art. The plasticizers preferably include a monomeric plasticizer such as dioctylphthalate, dioctyladipate or the like and/or a polymeric plasticizer such as polyethylene sebacate or the like. As used hereinafter, the term "plastic" when applied to the material of which the gasket is formed is intended to refer to such materials.

FIGURE 4 shows the extruded gasket of plasticized and compounded polyvinyl chloride in its normal unstressed condition prior to being mounted on the door **2**. For convenience in description of the structure of this gasket, references to directions will be understood as referring to this figure. The gasket is of hollow tubular construction and comprises a substantially flat, stiff generally horizontal wall or base **20** of substantial thickness, having along one edge a downwardly extending anchoring section **21** of generally L-shaped cross section and along its other edge and spaced from the anchoring section, a downwardly extending generally inclined sealing flange **22** with its outer edge generally in alignment with flat lower portion **23** of the anchoring section. This lower portion **23** has on its underside several downwardly projecting ribs **24** adapted to bear in sealing relation against the wall portion **13** of the door, and an upwardly projecting relatively thick fastening rib **25** adapted to be clamped by the hook-shaped portion **18** of the gasket holding strip **16** to hold firmly the gasket **4** in place on the door, as shown in FIGURES 1 to 3 inclusive.

The base **20** of the gasket **4** supports a relatively thick, stiff, upwardly projecting substantially vertical strut wall or rib **26**, located essentially midway of the width of the sealing portion of the gasket. This wall **26** has integrally formed with it and supports two equal width generally upwardly extending and outwardly inclined divergent branch walls **27**, which are thinner and substantially more flexible than the wall **26**. Extending between and spanning the angle between the branch walls **27** is a generally transversely extending top or outer curved wall **28** having its convex side extending upwardly beyond the distal ends of the divergent walls **27**. This curved or sealing wall **28** is thinner and substantially more flexible than the central supporting strut wall **26**.

Along each side edge of the curved wall **28** is a generally transversely extending downwardly inclined upper side wall portion **29** joined along a continuous common juncture at its inner edge to the curved wall **28** and to one of the branch walls **27**; at its outer edge each upper side wall portion is joined integrally to one of a pair of spaced equal width lower side wall portions **31**. The lower edge of each of the wall portions **31** is affixed integrally to the base **20**, the wall portion extending upwardly from the base and preferably being inclined outwardly. Preferably, in cross section, developed width B of the curved central or top sealing wall **28** is approximately twice developed width C of each of the equal width transversely extending upper side wall portions **29**. Moreover in the preferred embodiment of FIGURE 4, developed width D of each of the wall portions **31**, and developed width E of each of the walls **27**, in each case is approximately equal to the developed width C of the walls **29**.

In the embodiment of FIGURE 4, the juncture between each upper side wall portion **29** and its associated lower side wall portion **31** takes the form of an abrupt corner; while this juncture may be curved, the abrupt corner is preferred since it better localizes deformation resulting from changes in the positions of joined wall portions **29** and **31** relative to each other. Wrinkling of sealing walls while and after the door closes is thus avoided. The corner angle also tends to increase the shape-retaining forces developed within the gasket by inherent resiliency on release of sealing compression. Moreover, each angle U included between the centrally located wall **26** and the walls **27**, each angle V between each of the walls **27** and the top wall **28**, and each angle W between each associated pair of the walls **29** and **31**, are all large angles; preferably, as shown in FIGURE 4, the angle U is larger than the angles V and W, which may approximate right angles and be approximately equal. Angles U, V and W are usually greatly decreased when the gasket is compressed, as apparent from FIGURES 2 and 3, the angles V and W being usually reduced to small acuate angles. Since the uncompressed shape of the gasket requires a large angle at each of the angles U, V and W, they aid greatly in providing resistance to deformation necessary to effect good sealing on compression and to restore by inherent resiliency the original shape of the gasket when it is free of compressive forces.

The angle X included between the branch walls **27**, on the other hand, while a large angle, preferably is not larger than about a right angle, and may even be a large acute angle. When the gasket is compressed, this angle X is greatly increased to a wide obtuse angle, as is apparent from FIGURES 2 and 3. The inherent tendency of the diverging branch walls **27** to remain in, or to return to their original position in which the angle X is substantially a right angle also provides resistance to deformation necessary for the formation of an effective seal, provides forces tending to maintain the arcuate shape of the wall **28**, and provides forces restoring the original shape of the gasket when the door is opened.

Angle Y between the base and each lower side wall **31** are also large angles, which preferably do not depart greatly from right angles. In compression of the gasket, as is apparent from FIGURES 2 and 3, the angles Z and Y usually are substantially enlarged. The tendencies of the walls between which these angles are included to return to the positions in which the angles are of their normal smaller size provide desirable resistance to deformation for sealing purposes and also aid in providing desirable forces tending to restore the gasket to its original shape when it is freed of pressure.

It is apparent that the gasket of FIGURE 4 has three separate adjacent air chambers **33**, **34**, **35** of comparable substantially equal cross sectional areas, providing a large total volume of insulating air space broken up into several air cells. Consequently the gasket has excellent heat in-

sulation properties; moreover, the air confined in each of the chambers exerts pressure on the boundary walls of the chambers when they are compressed in the closing of the refrigerator door, which pressure tends to maintain the sealing walls in good sealing engagement with the surface 12 of the wall portion 11 despite irregularities therein, and which pressure also tends to restore the gasket to its original shape when the door is opened. The gasket is selected for the spacing between the door and the cabinet and the hinge offset so as to assume approximately the shape shown in FIGURE 3, in the closed position of the door, along that side of the door which is remote from the hinge axis; there is substantially no transverse sliding or wiping movement of the gasket relatively to, and no wrinkling of the surface of the gasket in contact with, the wall portion 11 of the refrigerator cabinet as the refrigerator door closes.

At regions of the juncture between the door and cabinet of the refrigerator away from the hinged side of the refrigerator opening, the gasket 4 is subjected to compressive forces directed substantially perpendicular to the base 20 of the gasket, and not to any appreciable transverse forces; the condition of the gasket when it is in sealing engagement in such regions is illustrated in FIGURE 3. It will be noted that the curved central portion 28 is flattened and in sealing engagement with the wall portion 11 of the cabinet, as are both upper side wall portions 29. The branch walls 27 are moved outwardly and flattened, as are the lower side walls 31. As was previously indicated, the angles U, V and W are substantially reduced, whereas the angles X, Y and Z are substantially increased. The resistance provided by the inherent resiliency of the gasket structure to such deformation effectively aids in the sealing action, promotes restoration of the original shape of the gasket when and each time the cabinet door is opened, and inhibits the development of an undesirable permanent set in the gasket.

The action of the gasket in cushioning closing of a refrigerator door, sealing against passage of air and providing a heat barrier after the door has been closed, is illustrated in FIGURES 1, 2 and 3. When the refrigerator door is closing, the outwardly curved central or top wall 28 of the gasket first contacts the wall surface 12 of the refrigerator cabinet at the hinge side of the door opening, as shown in FIGURE 1. As the door swings further to its completely closed position, shown in FIGURE 2, the gasket is subjected to the previously mentioned transverse forces. However, due to its construction, the gasket yields transversely while contriving to exert forces resiliently resisting distortion and compression, and thus providing a good seal.

The structure of the gasket thus prevents leakage of air or impairment of heat insulation properties which could result from wrinkling, or abrasion and wear, of the gasket at the hinge of the door on closing. The transverse distortion of the gasket at the hinge side of the refrigerator opening when the door is in its closed position does not prevent a good seal. There is a wide area of gasket making good sealing contact with the cabinet; thus, as shown in FIGURE 2, even though a portion of the normally outwardly curved top or central wall 28 of the gasket may not completely engage the surface 12 of the wall portion 11 of the refrigerator cabinet in sealing engagement due to the transverse deformation of the gasket, one of the upper transverse walls 29 contacts such surface in good sealing engagement in the vicinity of the hinges, thus aiding in the sealing action. Moreover, since the wall portions 28 and 29 are all relatively thin and flexible and are supported structurally by the branch walls 27 and the side walls 31, they readily conform to and make snug sealing engagement with the cabinet surface 12 despite irregularities in such surface; the outwardly curved arcuate top wall 28 provides particular benefits in this respect, since the curvature facilities fitting of the wall material over and into irregularities in the confronting surface of the wall portion 11.

The relatively stiff wall 26 is not appreciably deformed when the gasket is compressed either at the hinged side of the door or elsewhere. In fact it acts as an upwardly projecting cantilever beam, which anchors the lower ends of the divergent branch walls 27 projecting from and integrally formed with the wall 26; the wall 26 aids in imparting forces to the walls 27 which resist deformation, improves sealing and restore the original shape of the gasket when it is released from compression. The branch walls 27 also act as truss members by exerting upwardly directed forces on the walls 28 and 29, which together form a generally transversely extending top wall of the gasket when the gasket is compressed under either of the conditions shown in FIGURES 2 and 3; the tendency of these walls 27 to remain in or to return to their original undistorted positions thus is an important factor in maintaining an effective seal and in restoring the gasket to its original shape. Furthermore, the fact that both of these walls are anchored together at their lower ends to the common wall 26 also permits the walls 27 in effect to pivot about the point or along their axis of anchoring so that the gasket can yield to transverse forces sufficiently to avoid undesirable wrinkling or abrasion at the hinged side of the refrigerator opening; this yielding action is also facilitated because the lower side walls 31 are relatively thin and flexible, are anchored to the base 20 for relative bending or pivoting about points 37.

It will be apparent that the advantages of gaskets embodying the invention will be most fully realized if the gasket size and shape is selected in view of the space present between the door and the cabinet of the refrigerator, and the amount of the hinge offset.

Thus, FIGURE 5 shows another form of gasket embodying the invention which in all respects is similar to that of FIGURE 4 except that stiff wall portion 26*a* and lower side portions 31*a* are shallower and narrower, respectively, than the corresponding walls in the embodiment of FIGURE 4. This dimensional variation enables this gasket to be used in a refrigerator in which there is a relatively narrow spacing between the inner surfaces of the door and the front surface 12 of the cabinet. The gasket of FIGURE 5 otherwise operates in a similar manner to that of FIGURE 4 and possesses similar advantages.

The gasket of FIGURE 6 is designed for a refrigerator having a greater space between the inner surface of the door and the front surface 12 of the cabinet than the refrigerator of FIGURES 1–3. This gasket of FIGURE 6 is similar to that of FIGURES 4 and 5 except that the strut wall portion 26*b* and the lower side wall portions 31*b* are deeper or wider than in either of the preceding embodiments. The gasket of FIGURE 6 is similar in all other respects to, operates similarly to, and has the advantages of the gasket of FIGURE 4.

Various other modifications may be made; for example, while two branch walls 27 are included in each of the illustrative embodiments, a different number of such walls may be employed. The height and thickness dimensions of the central wall 26, 26*a* or 26*b* may be different than those illustrated. While the upper side walls 29 and the lower side walls 31, 31*a* and 31*b* have been shown as substantially flat, which is preferable, it is apparent that they may be somewhat curved if desired. Preferably the thickness of the walls 28, 29 and 31 in FIGURE 4, and the thickness of the corresponding walls in the other figures are approximately equal. While the thickness of the branch walls 27 may be equal to the thickness of walls 28, 29 or 31, it is preferable that they be slightly thicker to aid in the cantilever truss action, to exert outwardly directed forces on the walls 28 and 29 of the deformed or compressed gasket.

The present invention thus provides a one piece extrudable gasket which in its preferred form incorporates a relatively thick or heavy sectioned cantilever strut mem-

ber centered on, anchored to, and running longitudinally to the base member. The strut member is flanked in spaced relation by side walls of relatively thin section each comprising angularly disposed upper and lower portions. The bottom edges of the lower portions are anchored to the base member along lines paralleling, spaced from and on opposite sides of the strut member anchorage; the top edges of the two upper side walls portions are respectively joined to the upper edges of a pair of oblique branch walls which latter are anchored by their lower edges to the top of the strut member along a common juncture line which parallels but is displaced upwardly from the base member and from the plane defined by the anchorage lines of the side wall portions. The top edges of the two side walls are also connected by an outwardly bowed top member or panel the parallel edges of which are integrally joined to both the side walls and the oblique branch walls along common juncture lines. Thus a multi-cell arrangement is provided, the cells running continuously throughout the length of the gasket in side by side relation, each cell being contiguous to all or both of the other cells. The central cell is spaced above the base by the height of the strut member and, under normal compression of the gasket, the strut member resists complete collapse of the side cells. However, to prevent pinched fingers and damage to the refrigerator or gasket the strut member yields under extreme forces to allow complete collapse of the gasket.

Those skilled in the art will appreciate that the embodiments shown are for purposes of explanation and illustration and that various other changes and modifications can be made in the disclosed embodiments of the invention without departing from the spirit and the scope thereof. The essential characteristics of the invention are described in the appended claims.

I claim:

1. A hollow flexible sealing gasket for refrigerators or the like having a uniform cross section throughout its length, said gasket being formed of plastic material and comprising in its normal unstressed condition a relatively stiff base member; two spaced side walls extending upwardly from said base member and integrally joined therewith at their lower edges along spaced parallel juncture lines, said side walls being substantially more flexible than said base member; a single wall fixed to and projecting upwardly from said base member at a location substantially midway between said side walls, said upwardly projecting wall being substantially stiffer than said side walls and stiff enough to resist deformation laterally relative to said base member; two upwardly diverging walls fixed at their lower edge portions along a common juncture line to the upper portion of said stiff wall; a top wall extending between the upper edges of said diverging walls and between the upper edges of the side walls, said top wall along one of its edges having one common juncture with side wall on one side of the stiff wall and with one of the divergent walls and having along another of its edges another common juncture with the side wall on the other side of the stiff wall and with the other of the divergent walls, said top and divergent walls being substantially more flexible than the stiff wall and than said base member, said walls defining longitudinally continuous cells, one cell being located in the angle between the divergent walls, and two side cells being located one on each side of the stiff wall, the side cells each being contiguous to one another and to the one cell.

2. A sealing gasket as defined in claim 1 in which one of the side walls includes angularly disposed portions having a juncture line paralleling and spaced from the common juncture line.

3. A hollow flexible sealing gasket for refrigerators or the like having a uniform cross section throughout its length, said gasket being formed of plastic material and comprising in its normal unstressed condition a relatively stiff elongated base member; two spaced essentially flat outwardly diverging side walls extending upwardly from said base member and integrally joined therewith at their lower edges along essentially parallel lines, said side walls being substantially more flexible than said base member; a single wall fixed to and projecting upwardly from said base member at a location substantially midway between said side walls, the stiffness of said upwardly projecting wall approximating that of said base member; two spaced essentially flat, divergent, upwardly extending, internal walls disposed between said side walls with their lower edges fixed to said stiff upwardly projecting wall at a location above said base member and having their upper edge portions spaced apart by a distance considerably greater than the distance between their lower edge portions, said upwardly extending internal walls being substantially more flexible than said base member and said upwardly projecting stiff wall; an upwardly projecting generally curved top wall extending between the upper edge portions of said upwardly extending internal walls, said wall being substantially more flexible than said base member; and essentially flat generally transversely extending walls each between the upper edge portion of one of said side walls and the upper edge portion of an adjacent internal wall, each of said generally transversely extending walls being substantially more flexible than said base member and said stiff upwardly projecting wall.

4. A gasket for effecting a seal between parts such as a door and a door frame of a refrigerator cabinet, said gasket comprising a pliable plastic hollow tubular extrusion of uniform section having a generally flat base member adapted to be attached to one of the parts, a pair of side walls integrally joined to the base member along spaced parallel connection lines and extending upwardly therefrom, a single strut wall joined to the base member along a strip intermediate and spaced from both of said connection lines, said strut wall projecting upwardly from said base member and being substantially stiffer than said sidewalls and stiff enough to resist deformation laterally relative to said base member, a pair of internal walls integrally joined to the strut wall along a common juncture spaced above and paralleling said intermediate strip, said internal walls extending upwardly from the juncture in divergent angular relation and each having an upper edge spaced above and paralleling the juncture, said strut wall constituting the sole connection between the internal walls and that portion of the base member located between said connection lines of the side walls, a top central wall spanning the angle between the internal walls and joined to the latter along their upper edges, and transverse walls spaced above the base and connected one between the upper portions of one of the internal and one of the side walls and another between the upper portions of the other of the internal and the other of the side walls.

5. A hollow sealing gasket for refrigerators or the like, said gasket being formed of flexible, resilient plastic material with a uniform cross section throughout its length and comprising in its unstressed condition

a relatively stiff longitudinally extending base member,

two external side walls

having lower edges integrally joined to the base member along spaced parallel lines of connection,

said side walls extending upwardly from the base member in spaced relation to one another,

an upstanding strut wall

extending longitudinally of the base member and integrally connected to it along a line of connection located between, parallel to and spaced from said side wall connection lines,

two internal walls disposed in the space between the side walls,

the lower edges of said internal walls and said strut wall being integrally joined together along a common longitudinally extending juncture parallel to the connection lines of the side walls,

said strut wall being substantially stiffer than each of said internal walls to resist lateral deflection;

said internal walls extending upwardly from said common juncture in divergent relation to one another in the provision of an internal angle;

each of said side and said internal walls being substantially more flexible than said base member;

said side and internal walls each having an upper edge spaced above and parallel to the base member and parallel to the upper edges of the others of said side and internal walls;

a top wall spaced above the base member and extending between the upper edges of the side walls,

said top wall being integrally connected to and forming angles with the upper edges of the internal walls;

said walls and base member defining continuous cells extending longitudinally of the gasket,

one cell being located in said angle between the internal walls and

two side cells being located one between one of the internal walls and one of the side walls and the other between the other of the internal walls and the other of the side walls, and

said cells each being defined in part by a portion of the top wall.

References Cited by the Examiner

UNITED STATES PATENTS

2,908,949	10/59	Frehse	20—69
2,968,845	1/61	Dickinson	20—35

HARRISON R. MOSELEY, *Primary Examiner.*

N. ANSHER, *Examiner.*