(No Model.)

S. A. MORSE.

CONVERTIBLE ELEVATOR AND DUMB WAITER.

No. 452,888. Patented May 26, 1891.

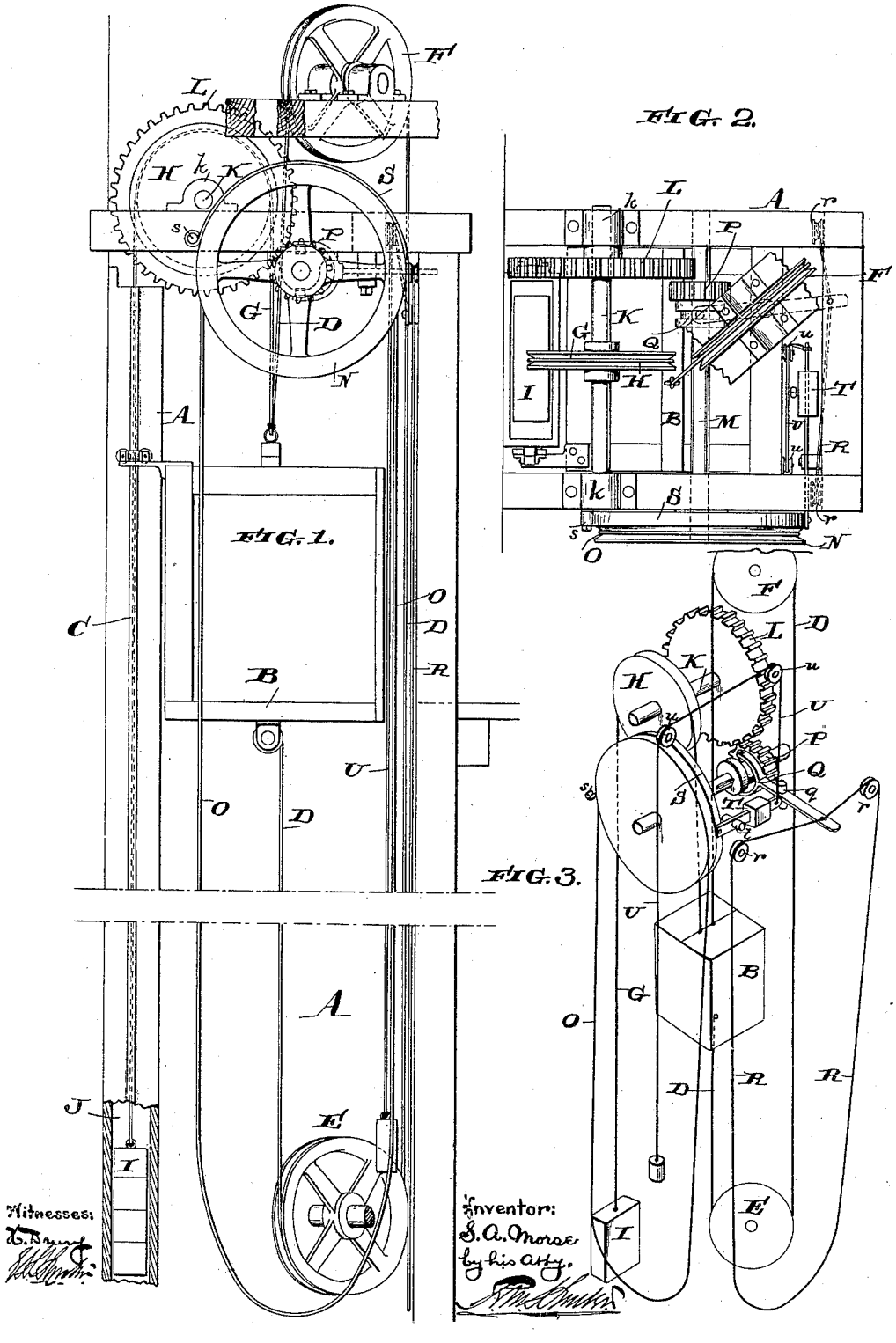

THE NORRIS PETERS CO., PHOTO-LITHO., WASHINGTON, D. C.

UNITED STATES PATENT OFFICE.

STEPHEN A. MORSE, OF PHILADELPHIA, PENNSYLVANIA.

CONVERTIBLE ELEVATOR AND DUMB-WAITER.

SPECIFICATION forming part of Letters Patent No. 452,888, dated May 26, 1891.

Application filed September 11, 1890. Serial No. 364,635. (No model.)

To all whom it may concern:

Be it known that I, STEPHEN A. MORSE, of the city and county of Philadelphia, and State of Pennsylvania, have invented an Improvement in Convertible Elevators and Dumb-Waiters, of which the following is a specification.

My invention relates to convertible elevators and dumb-waiters; and it consists of certain improvements, which are fully set forth in the following specification, and shown in the accompanying drawings, which form a part thereof.

The object of my invention is to combine in a single apparatus a dumb-waiter and an ordinary hoist or elevator in such a manner that the apparatus may be converted from one construction to the other at any moment desired and with great ease.

In carrying out my invention I employ an ordinary dumb-waiter construction in combination with an elevator hoisting-rope and its pulley. By means of suitable gearing connection may be made between the shaft of the pulley of the hoisting-rope and the shaft of the pulley of the balancing-weight of the dumb-waiter, so as to convert the dumb-waiter into an elevator or hoist, which may be operated from the cage or platform by the hoisting-rope. The two shafts may again at any moment be disconnected to reconvert the apparatus into a dumb-waiter, and this connection or disconnection of the two shafts may be made at any moment from the platform of the elevator or any part of the elevator-shaft.

Referring to the drawings, Figure 1 is a front elevation of my improved combined elevator and dumb-waiter. Fig. 2 is a plan view of the same, and Fig. 3 is a perspective view of the entire combined elevator and dumb-waiter apparatus removed from the shaft.

A is the elevator-shaft.

B is the car or platform, which may be guided in its ascension and descension by means of suitable guides C.

D is a dumb-waiter rope connected to the top and bottom of the cage or car B and running over pulleys E F, located at the bottom and top of the elevator-shaft, respectively.

G is the counterbalance-rope connected with the top of the cage or car B, running over the pulley H at the top of the elevator-shaft, and carrying the counterbalance-weight I, guided in the usual weight-box J.

K is the shaft of the pulley H, journaled in suitable bearings *k k*, and carrying a gear-wheel L.

M is a shaft journaled in suitable bearings in the top of the elevator adjacent to the shaft K, carrying a sheave and pulley N, by which the endless hoisting-rope is supported. Keyed upon the shaft M is a gear P, adapted to engage with the gear-wheel L upon the shaft K.

Q is a shifter pivoted in the top of the elevator-shaft at *q*, and adapted to shift the gear-wheel P into and out of engagement with the gear-wheel L.

R is a shifter-rope connected with the shifter Q and running over suitable guides or rollers *r r*, whereby the shifter Q may be operated in either direction to bring the gear-wheel P into or out of engagement with the gear-wheel L, as desired.

S is a brake or friction band for the sheave or pulley N, having one end secured to the elevator-frame at *s*, and the other end connected with the weighted lever T, pivoted in the elevator-frame at *t*.

U is a rope for raising the weighted end of the lever P to force the brake or friction band upon the sheave or pulley N. This cord or rope U is guided by suitable guides or rollers *u*.

The operation of the apparatus is as follows: When the gear P is out of engagement with the gear-wheel L of the shaft K in the manner shown in Figs. 1 and 2 the apparatus constitutes an ordinary dumb-waiter. If at any moment it is desired to convert this dumb-waiter into an ordinary hoist or elevator, this is accomplished by operating the rope R so as to move the shifting-lever Q and bring the gear-wheel P into engagement with the gear-wheel L in the manner shown in Fig. 3. Thus a connection is made between the shafts K and M through the gearing L and P, and the apparatus is converted into an ordinary hoist, which may be operated by the rope O. The upward or downward motion of the elevator may be arrested by operating the brake or friction band S by means of the rope U. To reconvert the elevator into a dumb-waiter the rope R is operated so as to move the shifting-

lever Q and bring the gear P out of engagement with the gear-wheel L.

While I prefer the details of construction which are here shown, I do not limit myself to them, as it is apparent that they may be modified in many ways without departing from the spirit of my invention.

Having now described my invention, what I claim as new, and desire to secure by Letters Patent, is—

1. In an elevator apparatus, the combination, with the movable carriage, of a pulley, a counterpoise-rope connected with said carriage and passing over said pulley, a second pulley arranged adjacent to said pulley of the counterpoise-rope, power-transmitting connections between said pulleys, and means to connect or disconnect said power-transmitting connections, whereby the apparatus may be converted from a dumb-waiter into a hoist, and vice versa.

2. The combination, in an elevator apparatus, of the movable carriage, a pulley H and its shaft K, a counterpoise-rope connected to said carriage and passing over the pulley H, a shaft M, arranged adjacent to the shaft K, a pulley N, carried by the shaft M, a hoisting-rope supported by the pulley N, power-transmitting connections between the shafts K and M, and means to connect or disconnect said power-transmitting connections.

3. The combination, in an elevator apparatus, of the movable carriage, a pulley H and its shaft K, a counterpoise-rope connected to said carriage and passing over the pulley H, a shaft M, arranged adjacent to the shaft H, a pulley N, carried by the shaft M, an hoisting-rope supported by the pulley N, a brake S for the pulley N, power-transmitting connections between the shafts K and M, and means to connect or disconnect said power-transmitting connections.

In testimony of which invention I have hereunto set my hand.

STEPHEN A. MORSE.

Witnesses:

JAMES R. ANDERSON,
MILLARD F. SHOCK.