US 20040106897A1

(19) United States

(12) Patent Application Publication

(10) Pub. No.: US 2004/0106897 A1

(43) Pub. Date: Jun. 3, 2004

Thompson et al.

(54) ASSEMBLIES FOR CREATING COMPOUND CURVES IN DISTAL CATHETER REGIONS

(76) Inventors: **Russell B. Thompson**, Los Altos, CA (US); **Sidney D. Fleischman**, Menlo Park, CA (US); **James G. Whayne**, Saratoga, CA (US); **David K. Swanson**, Mountain View, CA (US)

Correspondence Address:
HENRICKS SLAVIN AND HOLMES LLP
SUITE 200
840 APOLLO STREET
EL SEGUNDO, CA 90245

(21) Appl. No.: 10/719,727

(22) Filed: Nov. 20, 2003

Related U.S. Application Data

(60) Division of application No. 10/057,478, filed on Jan. 22, 2002, which is a continuation of application No. 09/054,257, filed on Apr. 2, 1998, now Pat. No. 6,602,278, which is a continuation of application No. 08/645,456, filed on May 13, 1996, now Pat. No. 5,820,591, which is a continuation-in-part of application No. 08/625,724, filed on Mar. 29, 1996, now abandoned, which is a continuation of application No. 08/099,603, filed on Jul. 30, 1993, now Pat. No. 5,395,327, which is a continuation of application No. 07/991,474, filed on Dec. 16, 1992, now Pat. No. 5,254,088, which is a continuation of application No. 07/736,384, filed on Jul. 26, 1991, now abandoned, which is a division of application No. 07/473,667, filed on Feb. 2, 1990, now abandoned.

Publication Classification

(51) Int. Cl.[7] A61M 31/00

(52) U.S. Cl. 604/95.04

(57) **ABSTRACT**

Compound steering assemblies, usable in both diagnostic and therapeutic applications, enable a physician to swiftly and accurately steer the distal section of the catheter in multiple planes or complex curves to position and maintain ablation and/or mapping electrodes in intimate contact with an interior body surface.

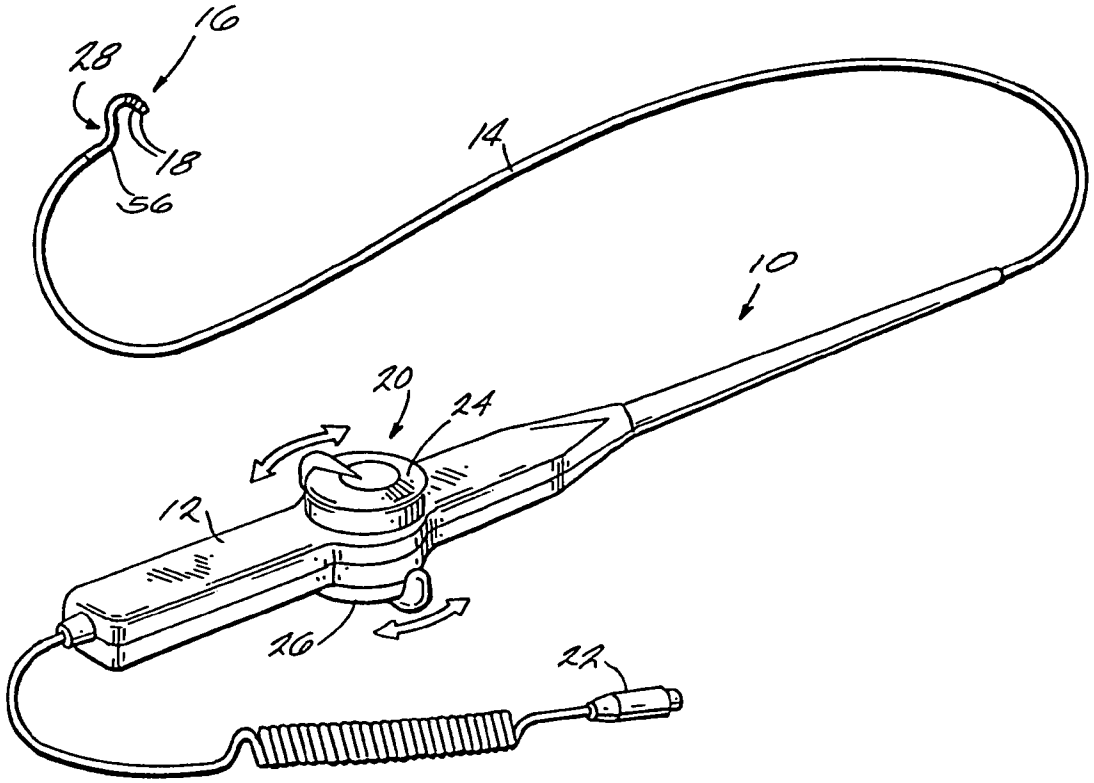

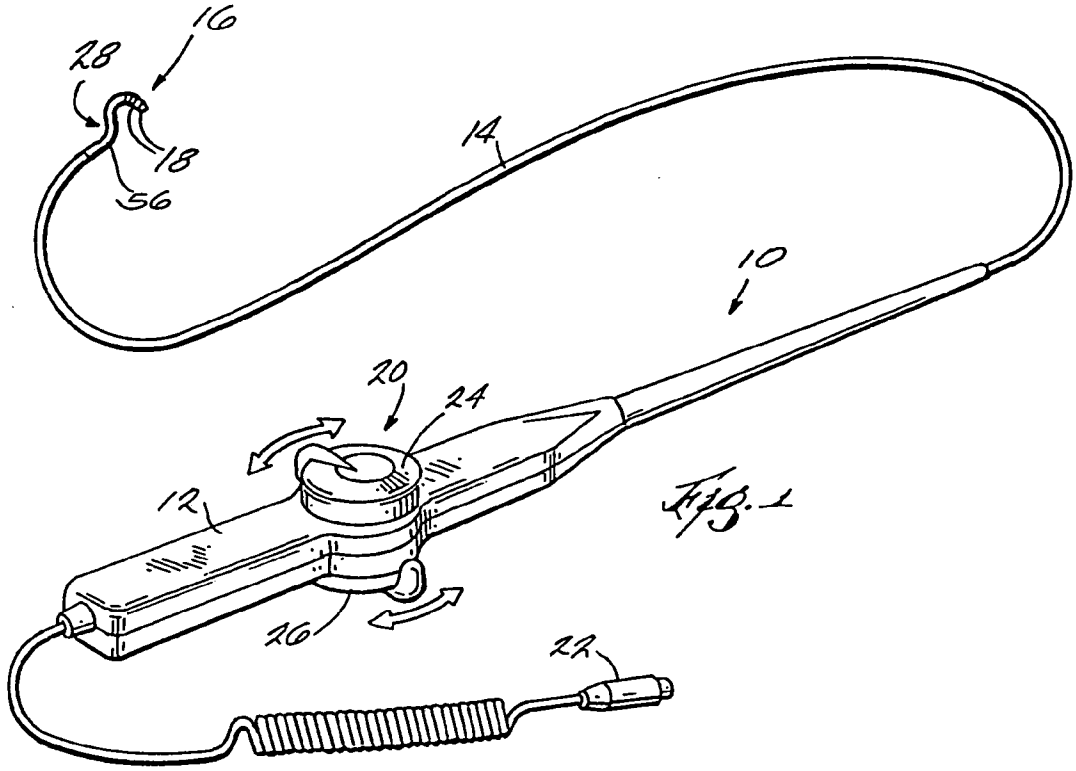

Fig. 1

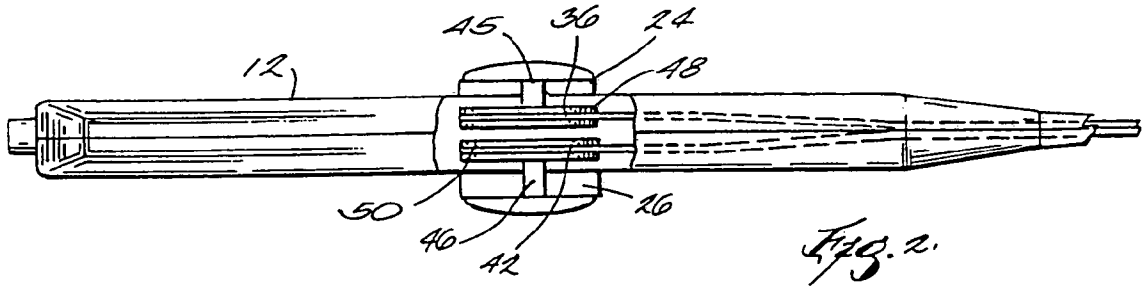

Fig. 2.

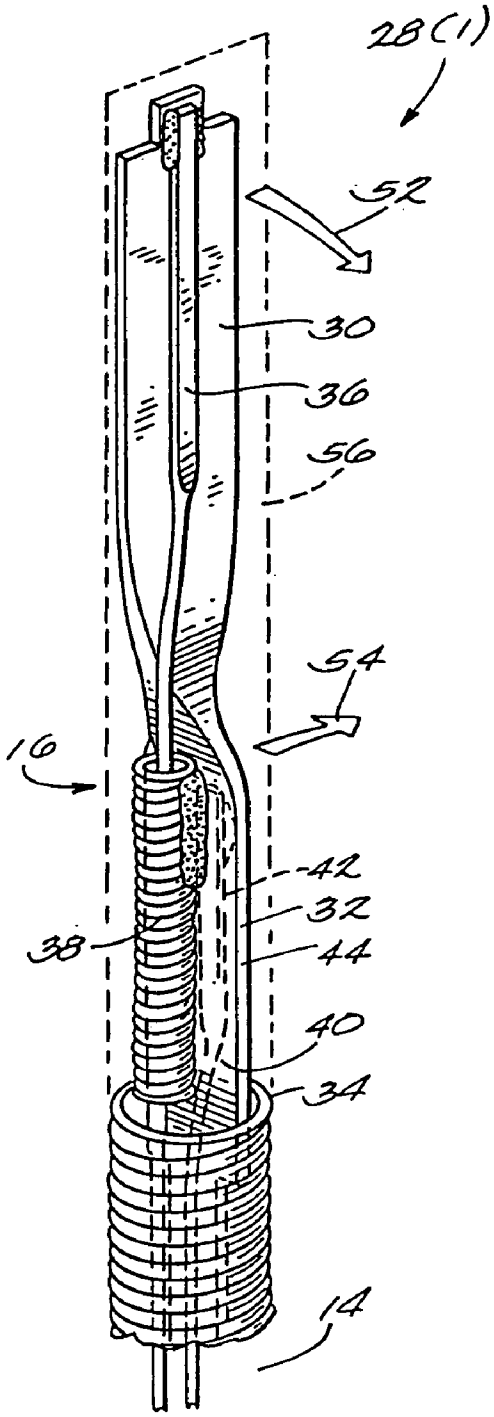
28(1)
52
30
36
56
54
16
42
32
38
44
40
34
14

Fig. 3

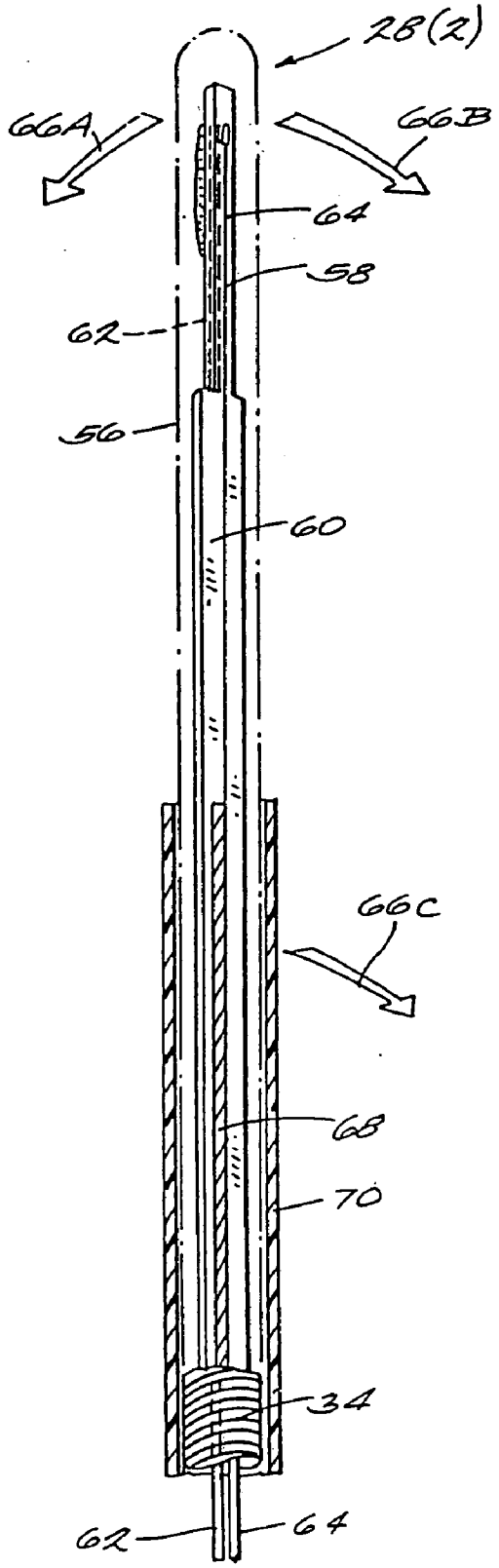
28(2)
66A
66B
64
58
62
56
60
66C
68
70
34
62
64

Fig. 4

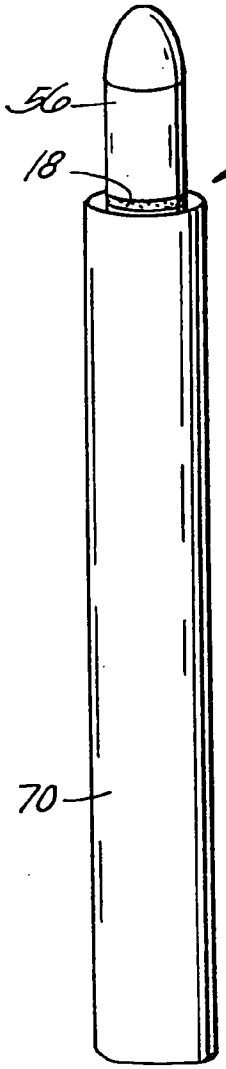

Fig. 5A

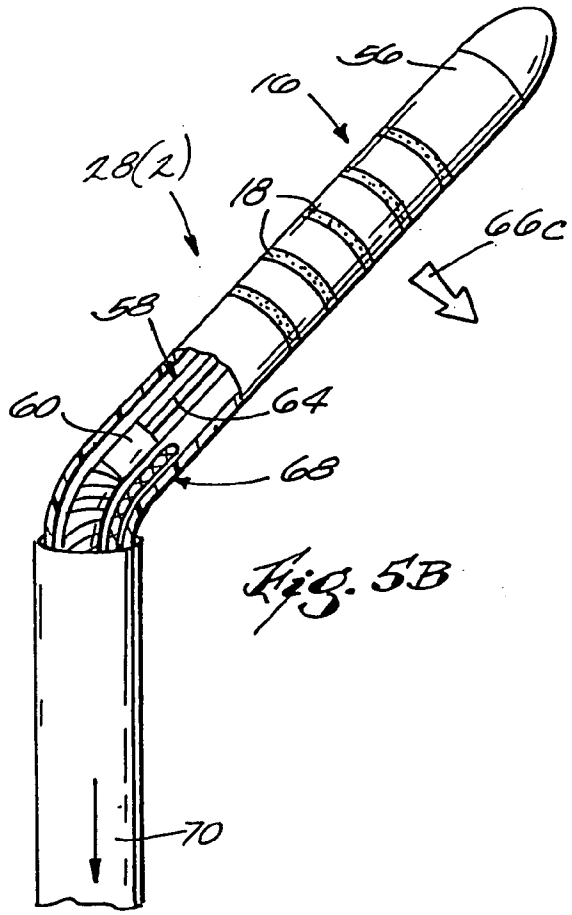

Fig. 5B

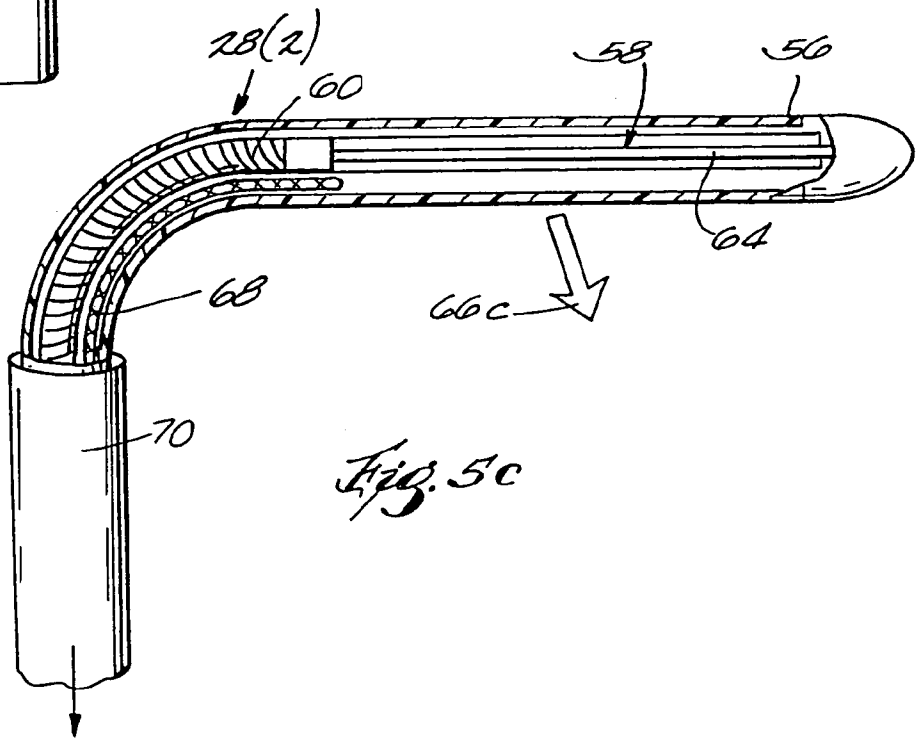

Fig. 5c

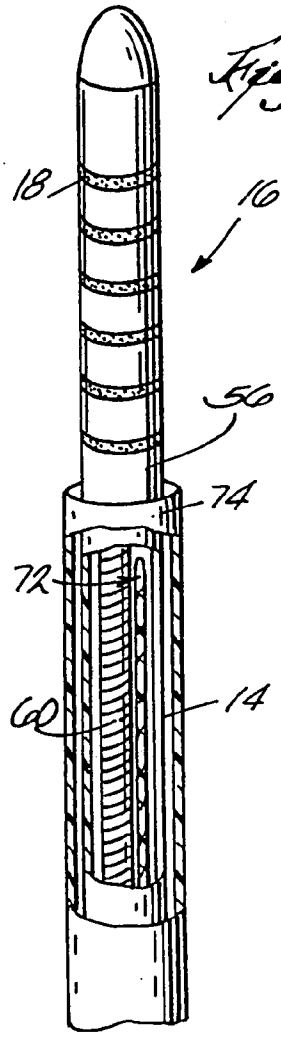

Fig. 6A

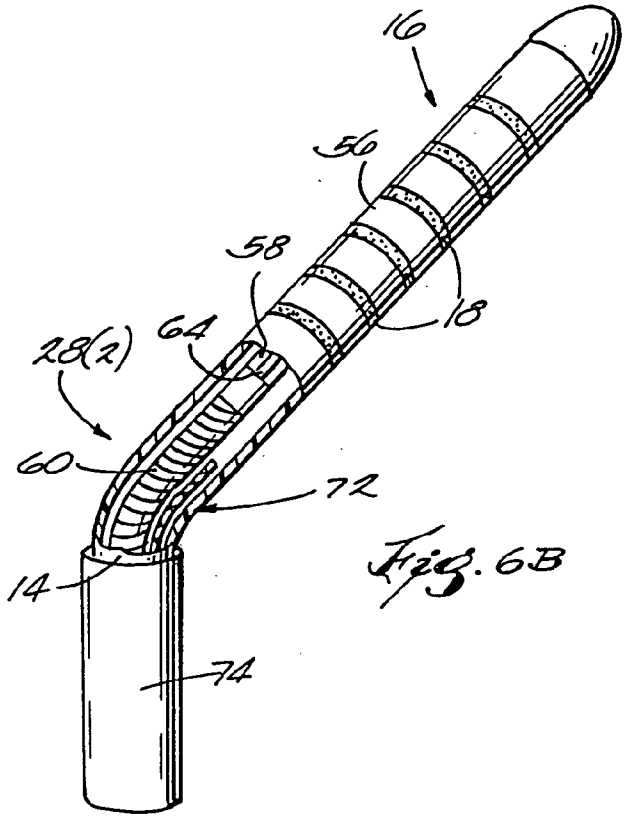

Fig. 6B

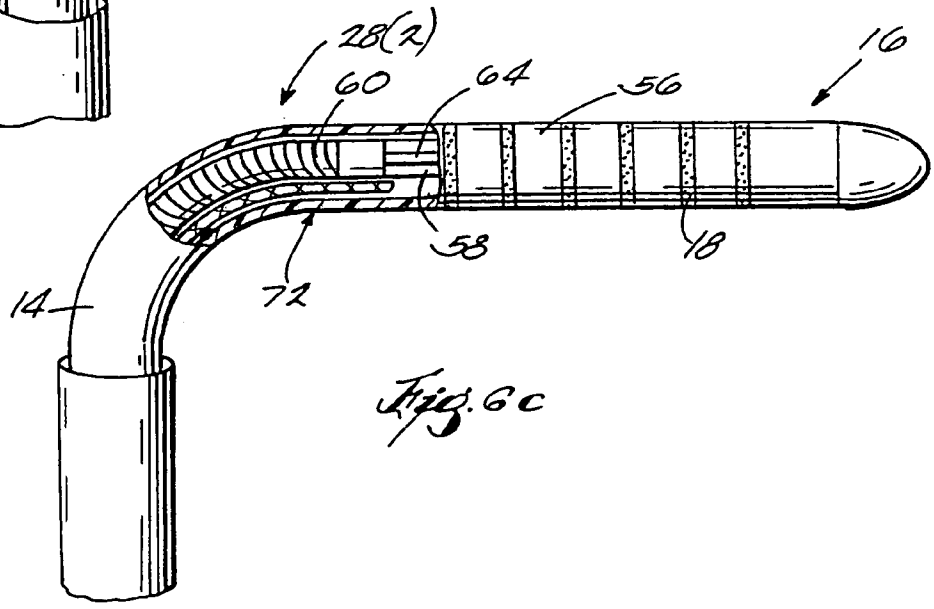

Fig. 6C

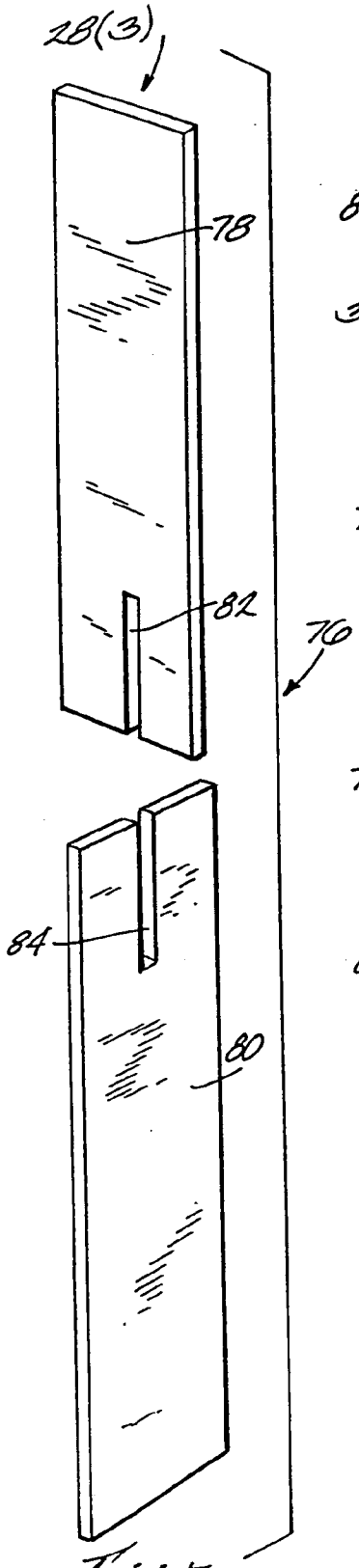

Fig. 7

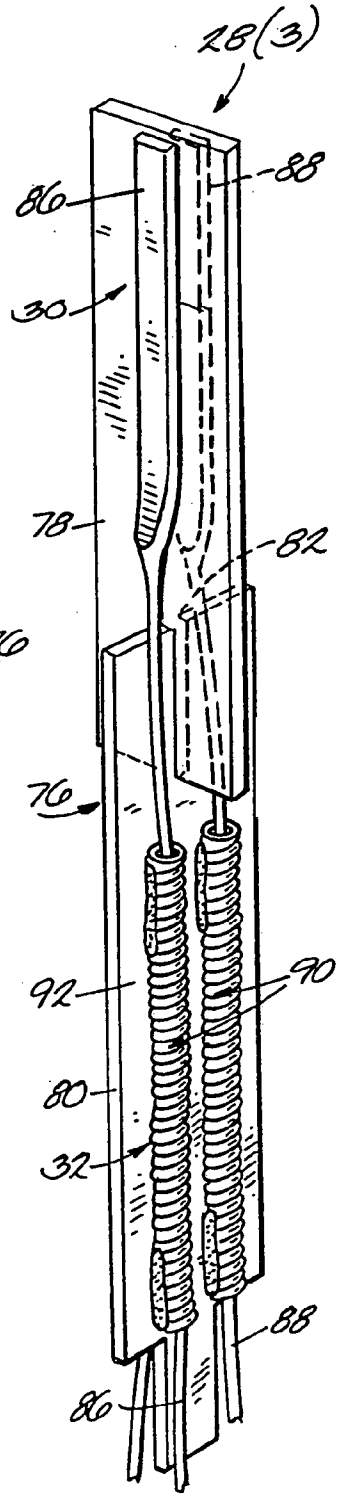

Fig. 8

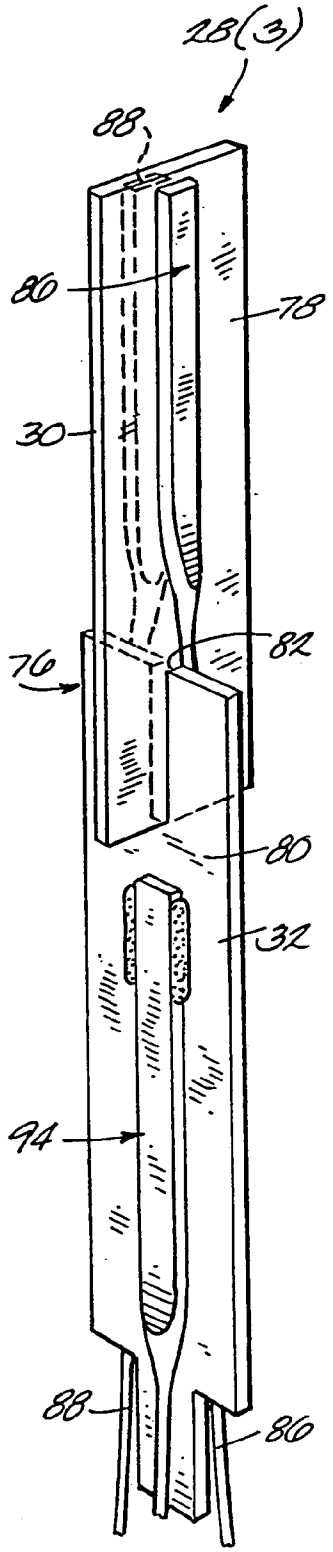

Fig. 9

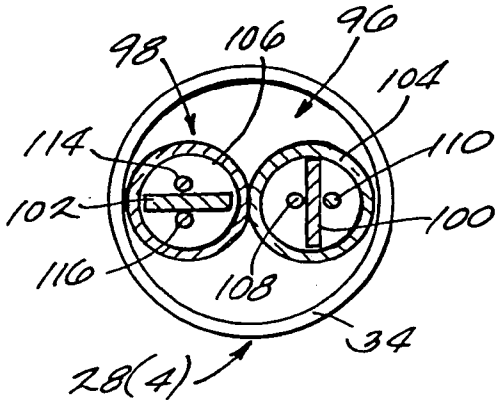

Fig. 10B

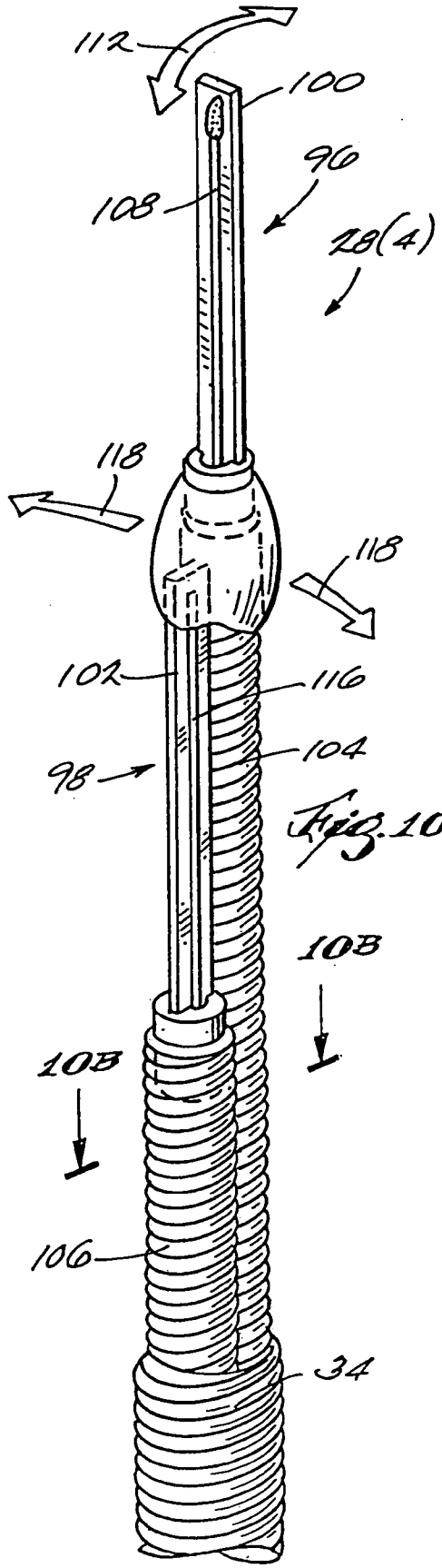

Fig. 10A

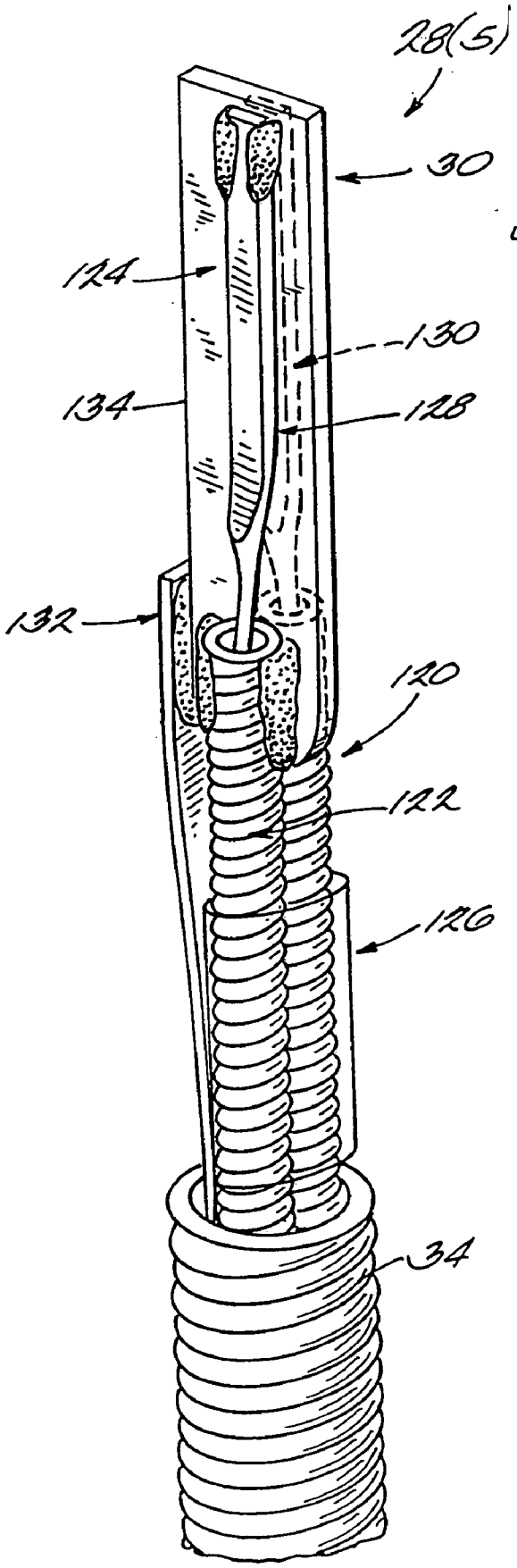

Fig. 11

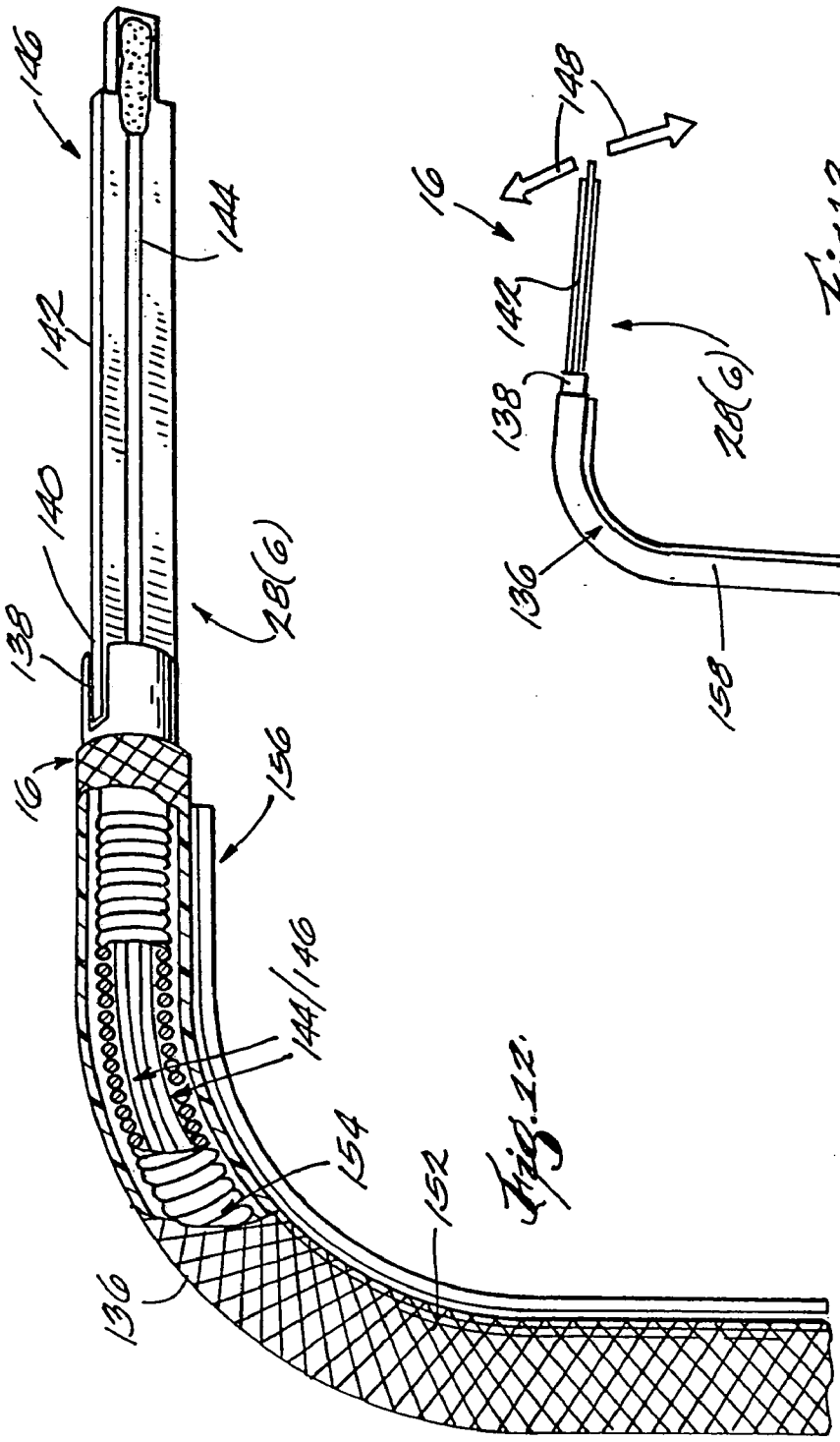
146
142
140
138
16
144
28(6)
156
144/146
154
152
136

Fig. 12.

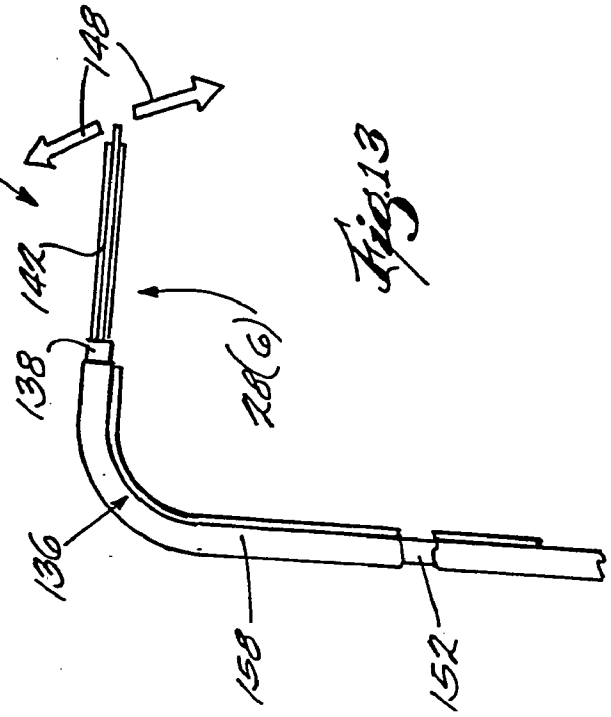
16
148
142
138
28(6)
136
158
152

Fig. 13

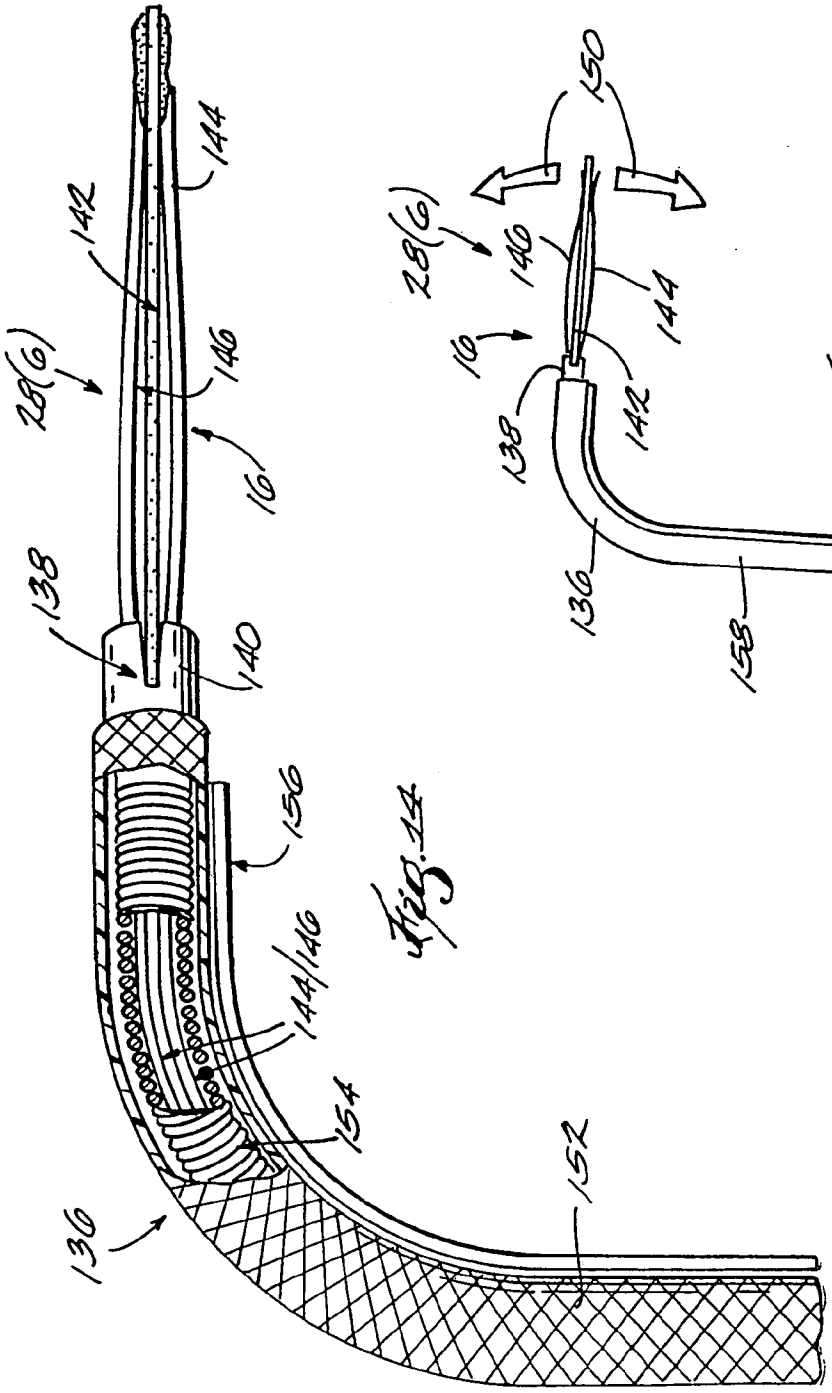
28(6)
138
142
144
146
16
140
156
144/146
154
136
152

Fig. 14

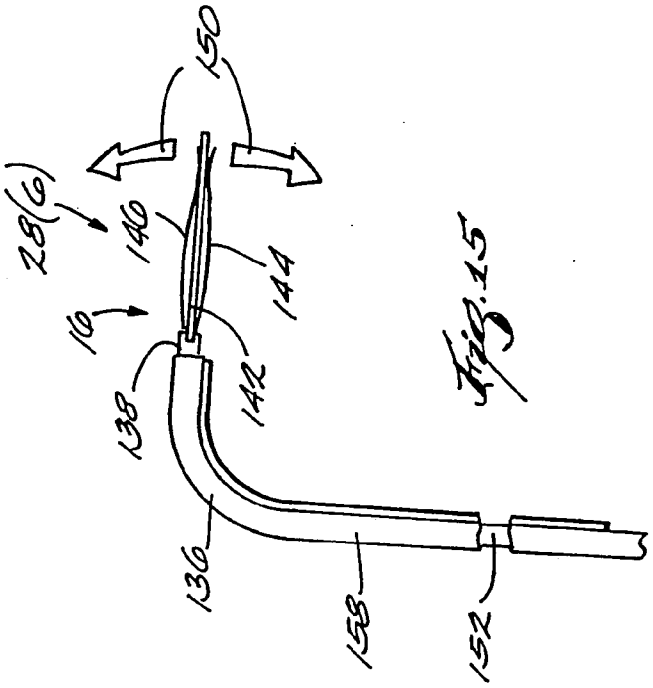
150
28(6)
146
144
16
138
142
136
158
152

Fig. 15

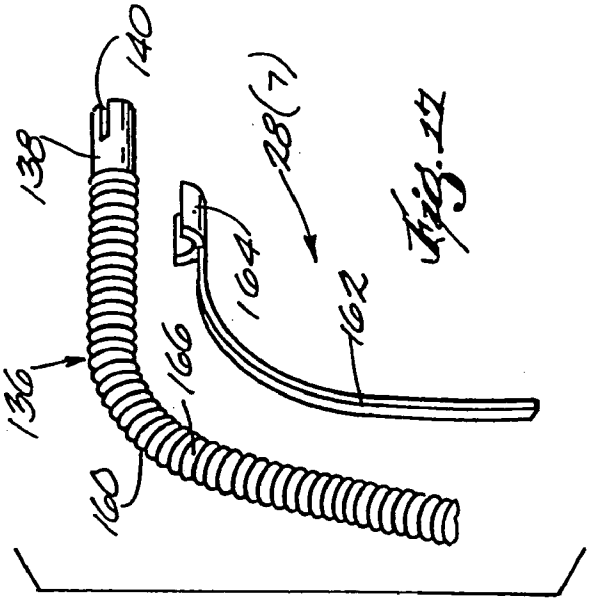

Fig. 17

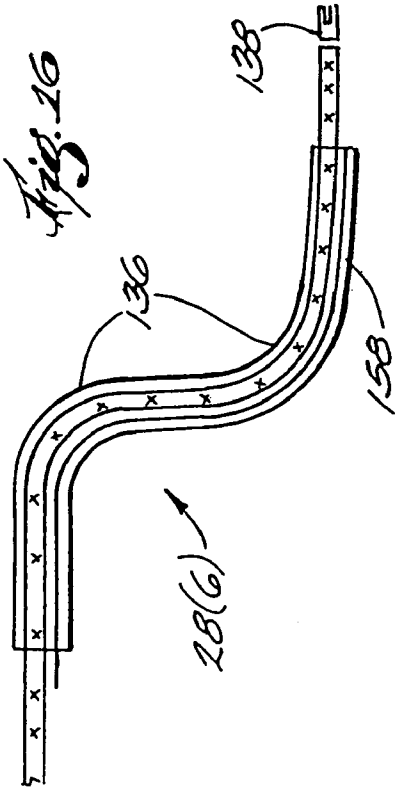

Fig. 16

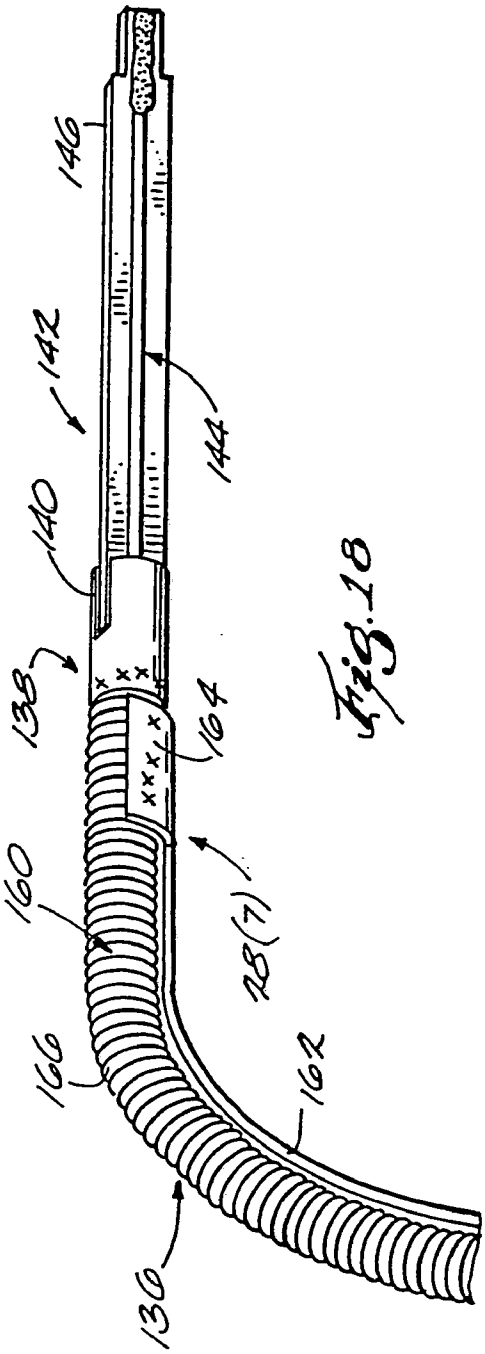

Fig. 18

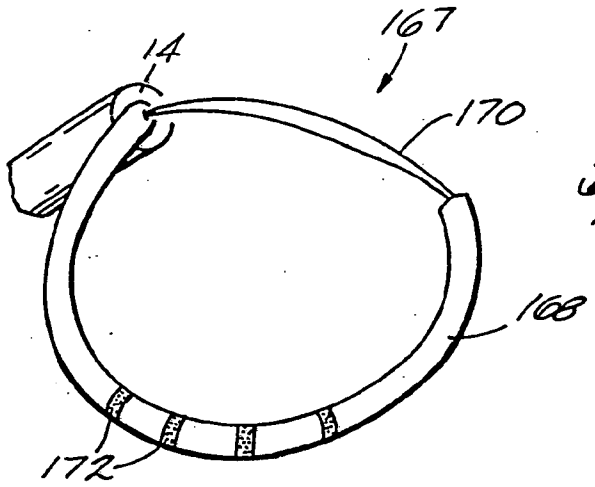

Fig. 19A

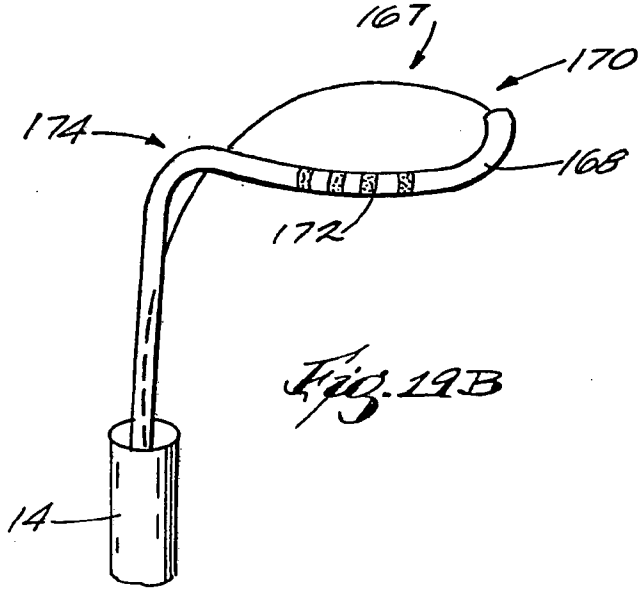

Fig. 19B

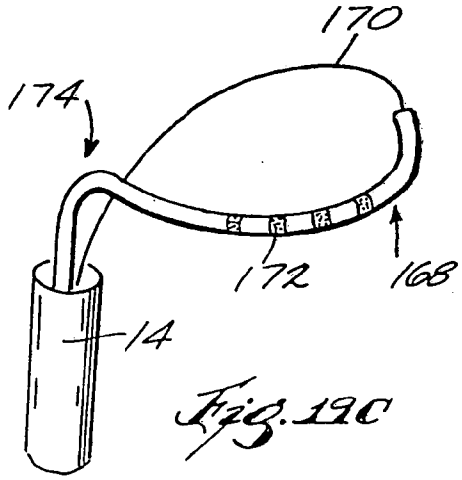

Fig. 19C

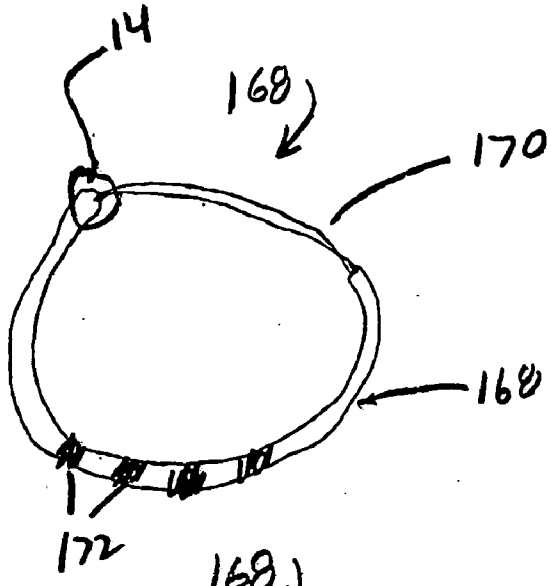

FIG. 19A

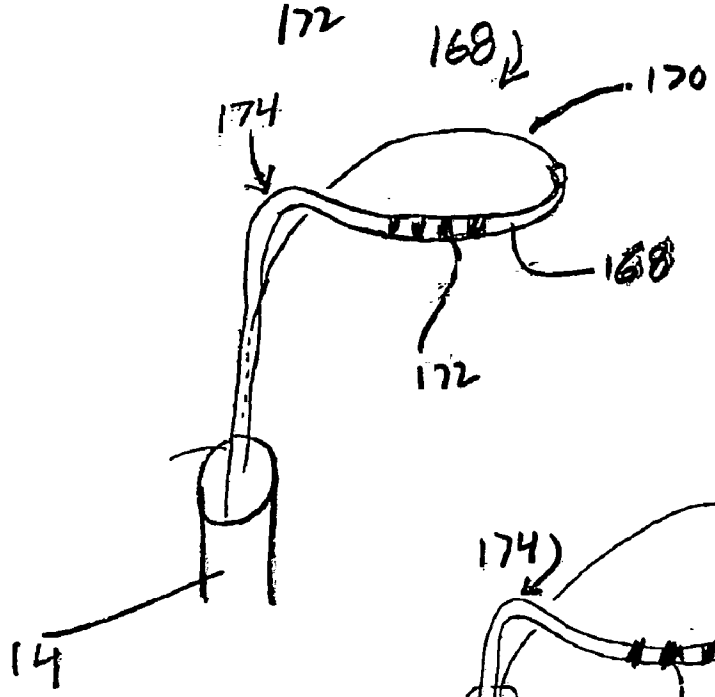

FIG. 19B

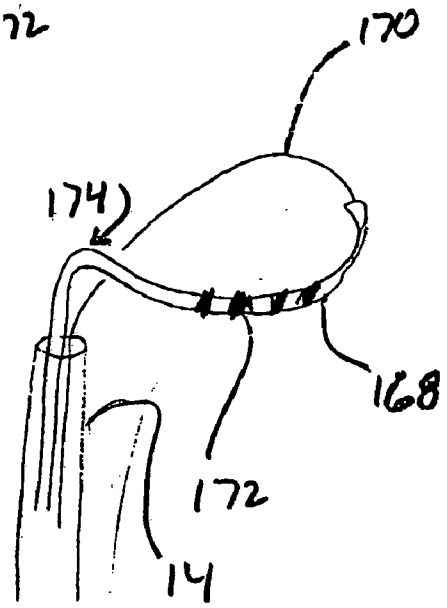

FIG. 19C

ASSEMBLIES FOR CREATING COMPOUND CURVES IN DISTAL CATHETER REGIONS

FIELD OF THE INVENTION

[0001] This invention relates to catheters that can by steered by external controls. More particularly the invention relates to such catheters that can assume complex three dimensional curves. In addition, the invention relates to the use of such complex curves to ablate arrhythmia substrates in body tissue.

BACKGROUND OF THE INVENTION

[0002] Cardiac mapping is used to locate aberrant electrical pathways and currents emanating within the heart. Such aberrant pathways cause irregular contractions of the heart muscle resulting in life-threatening patterns or disrhythmias.

[0003] Ablation of cardiac tissue to create long curvilinear lesions within the heart is also desired for treatment of various disorders such as atrial fibrillation. Various steering mechanisms for catheters carrying such electrodes have heretofore been developed and used.

[0004] To access various endocardial sites, physicians have used a number of different catheters and techniques, each of which provides a different characteristic. The use of catheters having limited steering characteristics increases the risk inherent in any catheterization procedure and limits the accessibility of many potential ablation sites.

[0005] Site access using standard distal tip steerable catheters is less of a problem because those catheters position a single electrode into contact with the endocardium and a specific electrode orientation is not required. Problems of endocardial site access are accentuated when trying to simultaneously position multiple electrodes into intimate tissue contact. In this scenario, standard steerable catheter configurations orient multiple electrodes in planes emanating about the axis of the introduction vessel.

[0006] A need has thus existed for catheters which, in the nonlinear environment found within the heart as well as other body cavities, are capable of being steered to place ablation elements at a number of locations while creating intimate tissue contact throughout the length of all active ablation elements.

[0007] Particularly, a need has existed for a catheter which could effectively and accurately form curves in more than one plane for better access or tissue contact. Previous attempts to provide such devices are represented by U.S. Pat. No. 5,383,852 wherein there was suggested the use of steering wire extending from a central lumen of a catheter radially outward to the periphery of a distal end component. Another suggestion in represented by U.S. Pat. No. 5,358,479 wherein a single pull cable is attached to the distal end of a shim which has two flat sections that are twisted relative to each other. This arrangement, however limits the device to bending, first, of the more distal portion of the shim followed by subsequent b nding of the more proximal section, thus limiting the procedures using the device.

SUMMARY OF THE INVENTION

[0008] The present inventions provides a catheter, usable in both diagnostic and therapeutic applications, that enables a physician to swiftly and accurately steer the distal section of the catheter containing the ablation and/or mapping element(s) in multiple planes or complex curves within the body of a patient. The catheters that embody the invention allows physicians to better steer a catheter to access various endocardial sites. In its broadest aspect, the invention provides catheters which enable a physician to position ablation and/or mapping electrodes inserted within a living body by manipulation of external controls into intimate contact with an interior body surface that curves in more than one plane.

[0009] One aspect of the invention provides a catheter having more than one steering mechanism for bending the distal section by external manipulation into more than one curvilinear direction. Movement of the individual controls results in bending of the distal section at more than one location and in more than one direction. Thus the ease of accessing and measuring electrical activity in all portions of the heart is increased.

[0010] In accordance with another embodiment, the catheter steering assembly may include a proximal section containing a preformed portion in conjunction with a distal steering mechanism which enables steering in a different plane that is non-parallel to the bending plane of the preformed proximal section, and/or improving tissue contact by moving the focal point of the steering mechanism to increase the angle of steering capable of applying force against the endocardial surface. This configuration may be accomplished by preforming the proximal section of the catheter into the desired curve or manipulating a preformed wire or other support structure which, when freed from the constraints of a sheath such as the catheter main body, causes the proximal section to assume the preformed shape.

[0011] In accordance with a further embodiment of the invention, a loop catheter has a preformed proximal end and a moveable wire attached to the distal end of the spline housing the ablation element(s). The preformed proximal end enables the loop to access varying planes relative to the catheter axis.

[0012] Further, objects and advantages of the invention will become apparent from the following detailed description and accompanying drawings.

BRIEF DESCRIPTION OF DRAWINGS

[0013] **FIG. 1** is a perspective view of a catheter having a distal region with a compound steering assembly that embodies features of the invention;

[0014] **FIG. 2** is a fragmentary side view of the handle portion of the catheter shown in **FIG. 1**;

[0015] **FIG. 3** is a perspective view of one embodiment of a compound steering assembly that embodies features of the invention;

[0016] **FIG. 4** is a side section view of another embodiment of a compound steering assembly that embodies features of the invention;

[0017] **FIGS. 5A** to **5C** are side views, with portions broken away and in section, of the compound steering assembly shown in **FIG. 4** in use;

[0018] **FIGS. 6A** to **6C** are side views, with portions broken away and in section, of an alternative embodiment of a compound steering assembly that embodies features of the invention being used;

[0019] **FIG. 7** is an exploded perspective view of a two piece offset spring assembly that forms a part of an alternative embodiment of a compound steering assembly that embodies feature of the invention;

[0020] **FIGS. 8 and 9** are side perspective views of the compound steering assembly that incorporates the two piece offset spring assembly shown in **FIG. 7**;

[0021] **FIG. 10A** is a side view of another embodiment of a compound steering assembly that embodies features of the invention;

[0022] **FIG. 10B** is a top sectional view of the compound steering assembly shown in **FIG. 10**A, taken generally along line **10**B-**10**B in **FIG. 10A**;

[0023] **FIG. 11** is a side view of another embodiment of a compound steering assembly that embodies features of the invention;

[0024] **FIGS. 12 and 13** are side views of another embodiment of a compound steering assembly that embodies features of the invention;

[0025] **FIGS. 14 and 15** are side views of another embodiment of a compound steering assembly that embodies features of the invention;

[0026] **FIG. 16** is a side view of a complex curve that a compound steering assembly made in accordance with the invention can assume;

[0027] **FIGS. 17 and 18** are side views of another embodiment of a compound steering assembly that embodies features of the invention; and

[0028] **FIGS. 19A** to **19**C are side views of another embodiment of a compound steering assembly that embodies features of the invention.

[0029] The invention may be embodied in several forms without departing from its spirit or essential characteristics. The scope of the invention is defined in the appended claims, rather than in the specific description preceding them. All embodiments that fall within the meaning and range of equivalency of the claims are therefore intended to be embraced by the claims.

DETAILED DESCRIPTION OF PREFERRED EMBODIMENTS

[0030] This Specification discloses electrode-carrying structures that can be bent in compound and complex manners for greater maneuverability within the body and enhanced contact with tissue. The illustrated and preferred embodiments discuss these structures, systems, and techniques in the context of catheter-based cardiac ablation. That is because these structures, systems, and techniques are well suited for use in the field of cardiac ablation.

[0031] Still, it should be appreciated that the invention is applicable for use in other tissue ablation applications. For example, the various aspects of the invention have application in procedures for ablating tissue in the prostrate, brain, gall bladder, uterus, and other regions of the body, using systems that are not necessarily catheter-based.

[0032] **FIG. 1** shows a catheter **10**, which embodies features of the invention. The catheter **10** includes a handle **12** and a flexible catheter body **14**. The distal region **16** of the catheter body **14** carries at least one electrode **18**. In the illustrated and preferred embodiment, the distal region **16** carries an array of multiple electrodes **18**.

[0033] The electrodes **18** can serve to monitor electrical events in h art tissue, or transmit electrical energy to ablate heart tissue, or both. Signal wires (not shown) are electrically coupled to the electrodes **18** in conventional fashion. The signal wires extend through the catheter body **14** into the handle **12**. The signal wires electrically connect to an exterior plug **22**, which can be connected to signal processing equipment or a source of electrical ablation energy, or both.

[0034] The catheter **10** shown in **FIG. 1** includes a steering mechanism **20**. The mechanism **20** includes two control knobs **24** and **26** on the handle **12**, which can be individually manipulated by the physician.

[0035] As will be described in greater detail later, the steering mechanism **20** is coupled to a compound steering assembly **28**, which is carried within the distal region **16** of the catheter body **14**. Operation of the control knobs **24** and **26** bend the steering assembly **28** to flex the distal region **16** (as **FIG. 1** generally shows) in ways that aid in orienting the ablation element **18** in intimate contact with tissue.

[0036] **FIG. 3** shows one embodiment of a compound steering assembly, designated by reference numeral **28(1)**, that embodies features of the invention. The compound steering assembly **28(1)** includes a spring element formed as a single piece in two bendable sections **30** and **32**. The bendable section **30** is distal to the bendable section **32**.

[0037] In the illustrated embodiment, the bendable sections **30** and **32** are arranged essentially orthogonally relative to each other, being offset by about 90°. Different offset angles between 0° and 180° may be used.

[0038] The proximal end of the proximal bendable section **32** is s cured within a guid tube **34**. In the illustrated embodiment, the guide tube **34** takes the form of a coiled stainless steel spring. The guide tube **34** extends from the steering assembly **28(1)** rearward within the catheter body **14** to the handle **12**. The guide tube **34** serves to stiffen the catheter body **14** and to help impart twisting motion from the handle to the steering assembly **28(1)**.

[0039] As **FIG. 3** shows, a distal steering wire **36** is attached by soldering or adhesive to one surface of the distal bendable section **30**. The steering wire **36** extends from the bendable section **30** through a guide tube **38** secured by soldering or adhesive to a surface **40** of the proximal bendable section **32**. From there, the steering wire **36** extends through the guide tube **34** into the handle **12**. The steering wire **36** is coupled to the control knob **24** within the handle **12**, as will be described in greater detail later.

[0040] A proximal steering wire **42** is attached by soldering or adhesive to the surface **44** of the proximal bendable section **32** opposite to the surface **40**. From there, the steering wire **42** extends through the guide tube **34** into the handle **12**. The steering wire **42** is coupled to the control knob **26** within the handle **12**, as will be described in greater detail.

[0041] Flexible heat shrink tubing **56** (shown in **FIG. 1** and in phantom lines in **FIG. 3**) encloses the compound steering assembly **28(1)**.

[0042] As **FIG. 2** shows, the control knobs **24** and **26** are individually coupled by shafts, respectively **45** and **46**, to rotatable cam wheels, respectively **48** and **50**, within the handle **12**. Rotation of the respective knob **24** and **26** serves to rotate its respective cam wheel **48** and **50**. The steering wire **36** is attached to the cam wheel **48**, and the steering wire **42** is attached to the cam wheel **50**.

[0043] Further details of the structure of the cam wheels **48** and **50** and their attachment to the steering wires **36** and **42** are not essential to the invention and can be found in U.S. Pat. No. 5,254,088, which is incorporated herein by reference.

[0044] Rotation of the cam wheel **48** (by manipulation of the knob **24**) pulls upon the distal steering wire **36**. This, in turn, pulls upon the distal bendable section **30**, flexing the bendable section **30** in the direction of the wire **36** (shown by arrow **52** in **FIG. 3**). The guide tube **38** facilitates movement of the steering wire **36** and the transmission of the pulling force from the cam wheel **48** to the bendable section **30**. In the absence of the pulling force upon the wire **36**, the bendable section **30** resiliently returns to its normal unbent condition (shown in **FIG. 3**).

[0045] Likewise, rotation of the cam wheel **50** (by manipulation of the knob **26**) pulls upon the steering wire **42**. This, in turn, pulls upon the proximal bendable section **32**, flexing the bendable section **32** in the direction of the wire **42** (as arrow **54** shows in **FIG. 3**). In the absence of the pulling force upon the wire **42**, the bendable section **32** resiliently returns to its normal unbent condition (as **FIG. 3** shows).

[0046] In the illustrated and preferred embodiment, the guide tube **38** comprises a stainless steel coil. As a steel coil, the guide tube **38** provides bending resistance and bias for the assembly **28(1)** to return to the unbent orientation after deflection.

[0047] The compound ste ring assembly **28(1)** makes possible the formation of complex curves in the distal region **16**. Pulling on the distal wire **36** bends the distal region **16** in the direction **52**. Pulling on the proximal steering wire **42** further bends the distal region **16** in a different direction **55**.

[0048] **FIG. 3** shows a single steering wire **36** and **42** attached to each bendable section **30** and **32** to provide unidirectional bending of each section **30** and **32**. Of course, either or both bendable sections **30** and **32** may include an opposing pair of steering wires (not shown) to provide bidirectional bending action. If bidirectional bending of the distal section **30** is desired, a guide tube **38** is preferably provided for each steering wire attached to the section **30**. In this arrangement, the guide tubes should preferably comprise a material at least as flexible as the proximal section **32** itself, so as to not impede the desired bending action.

[0049] **FIG. 4** shows an alternative embodiment of a compound steering assembly, designated **28(2)**. The compound steering assembly **28(2)** includes a spring element formed as a single piece in two bendable sections **58** and **60**. The bendable section **58** is distal to the bendable section **60**.

[0050] Like the embodiment shown in **FIG. 3**, the proximal end of the bendable section **60** is secured within a guide tube **34**. Unlike the embodiment shown in **FIG. 3**, the bendable sections **58** and **60** are not offset from each other, but extend in the same plane.

[0051] A pair of steering wires **62** and **64** are attached to opposite surfaces of the distal bendable section **58**. The steering wires **62** and **64** extend rearward through the guide tube **34** within the catheter body **14** for attachment to opposite sides of a rotatable cam wheel (not shown) within the handle **12**. U.S. Pat. No. 5,254,088 shows the details of this construction, which is incorporated herein by reference. Rotation of the cam wheel in one direction pulls on the steering wire **62** to bend the distal section **58** in one direction (shown by arrow **66**A in **FIG. 4**). Rotation of the cam wheel in the opposite direction pulls on the steering wire **64** to bend the distal section **58** in the opposite direction (shown by arrow **66**B in **FIG. 6**). Bi-directional steering of the distal section **58** is thereby achieved.

[0052] The compound steering assembly **28(2)** shown in **FIG. 4** further includes a preformed wire **68** secured by soldering or adhesive to the proximal bendable section **60**. The preformed wire **68** is biased to normally curve. The preformed, wire **68** may be made from stainless steel 17/7, nickel titanium, or other memory elastic material. It may be configured as a wire or as a tube with circular, elliptical, or other cross-sectional geometry.

[0053] The wire **68** normally imparts its curve to the attached bendable section **60**, thereby normally bending the section **60** in the direction of the curve. The direction of the normal bend can vary, according to the functional characteristics desired. The wire **68** can impart to the section a bend in the same plane as the distal bendable section **58** (as shown by arrow **66**C in **FIG. 4**), or in a different plane.

[0054] In this arrangement, the steering assembly **28(2)** further includes a main body sheath **70**. The sheath **70** slides along the exterior of the catheter body **14** between a forward position overlying the junction between the wire **68** and proximal bendable section **60** and an aft position away from the proximal bendable section **68**. In its forward position, the sheath **70** retains the proximal bendable section **60** in a straightened configuration against the normal bias of the wire **68**, as **FIG. 4** shows. The sheath **70** may include spirally or helically wound fibers to provide enhanced tensile strength to the sheath **70**. Upon movement of the sheath **70** to its aft position, the proximal bendable section **60** yields to the wire **68** and assumes its normally biased bent position. The slidable sheath **70** is attached to a suitable control mechanism on the handle **12**.

[0055] As **FIG. 5A** shows, during introduction of the proximal catheter region **16** into the body, the sheath **70** is retained in its forward position. This retains the proximal bendable section **60** in a substantially straight orientation (as **FIG. 4** also shows). After introduction of the distal catheter region **16** into a desired heart chamber, the sheath **70** is withdrawn (as shown in a stepwise fashion by **FIGS. 5B and 5C**). The wire **68** urges the proximal bendable section **60** to assume a curvature in the direction indicated by arrow **66**C.

[0056] The embodiment of **FIGS. 4 and 5**A/B/C provides compound curves. The amount of curvature of the preshaped wire **68** is selected in accordance with the projected shape of the body chamber into which the catheter is introduced. Further bending of the distal section **58** is accomplished by pulling on the steering wires **62** and **64**.

[0057] It should be appreciated that, instead of a stationary preshaped wire **68** and movable sheath **70**, the steering assembly **28(2)** can include a precurved stylet **72** (see **FIGS. 6A** to 6C) moveable along the proximal bendable section **60** within a stationary sheath **74**. A mechanism (not shown) mounted in the handle affects movement of the stylet **72** under the control of the physician. The stationary sheath **74** extends about the catheter body .**14** up to distal region **16**.

[0058] When located within the region of the sheath **74** (as **FIG. 6A** shows), the stylet **72** is retained by the sheath **74** in a straight condition. When the preshaped stylet **72** is advanced beyond the sheath **74** (as **FIGS. 6B and 6C** show, the stylet **72** imparts its normal curve to the proximal section **60**, causing it to assume a curvature determined by the stylet **72**.

[0059] FIGS. **7** to **9** show another alternative embodiment for a compound steering assembly, designated **28(3)**, embodying features of the invention. The compound steering assembly **28(3)** includes a composite spring **76** formed from two individual spring sections **78** and **80** (see **FIG. 7**). The spring sections **78** and **80** include mating central notches **82** and **84**, which nest one within the other to assemble the spring sections **78** and **80** together. Soldering or brazing secures the assembled sections **78** and **80** to complete the composite spring **76**.

[0060] The resulting composite spring **76**, like the spring shown in **FIG. 3**, comprises a bendable distal section **30** (spring section **78**) and a bendable proximal section **32** (spring section **80**). The bendable proximal section **32** is secured to a guide coil in the catheter body in the same manner shown in **FIG. 3**.

[0061] As **FIG. 8** and **9** further show, the compound steering assembly **28(3)** preferably includes two steering wires **86** and **88** attached by soldering or adhesive to opposite surfaces of the distal bendable section **30**. The steering wires **86** and **88** each extend from the distal bendable section **30** through a guide tube **90** secured by soldering or adhesive to one surface **92** of the proximal bendable section **32**. From there, the steering wires **86** and **88** extend through the main guide tube **34** within the catheter body **14** into the handle **12** for attachment to a control mechanism in the handle, as already described.

[0062] As **FIGS. 8 and 9** also show, the compound steering assembly **28(3)** preferably includes one steering wire **94** attached by soldering or adhesive to the proximal bendable section **32** on the surface opposite to the surface to which the guide tubes **90** are attached. The steering wire **94** likewise passes through guide tube **34** within the catheter body **14** for attachment to a second control mechanism in the handle, as already described.

[0063] As also previously described, the guide tubes **90** preferable take the form of metal coils. As coils, the guide tubes **90** provide increased spring bias to aid the return of the proximal bendable section **32** to the straightened position in the absence of pulling force on the steering wire.

[0064] The compound steering assembly **28(3)** shown in **FIGS. 8 and 9** permits flexing the distal bendable section **30** in opposite directions normal to the surface of spring section **78**. The compound steering assembly **28(3)** also permits independent flexing of the proximal bendable section **32** in a single direction normal to the surface of spring section **80** to which the steering wire **94** is attached.

[0065] While the illustrated and preferred embodiment of the proximal bendable section **32** shown in **FIGS. 8 and 9** does not permit bidirectional bending, it should be appreciated that two oppositely attached steering wires may be attached to the proximal section **32** to allow bidirectional steering. In this arrangement, the guide tubes **90** should be made of materials no less flexible than the proximal section itself.

[0066] **FIGS. 10A and 10B** show another alternate embodiment of a compounding steering assembly, designated **28(4)**. The compound steering assembly **28(4)** includes two separate steering assemblies **96** and **98** radially offset from each other within the catheter body **14** (see **FIG. 10B**). Each steering assembly **96** and **98** includes a bendable spring, respectively **100** and **102**, carried by relatively small diameter spring coils, respectively **104** and **106**. The bendable spring **100** extends distally to the bendable spring **102**.

[0067] A pair of steering wires **108** and **110** are attached to the opposite sides of the distal steering spring **100** to enable bending in a first plane (shown by arrows **112** in **FIG. 10A**). A second pair of steering wires **114** and **116** are attached to opposite sides of the proximal steering spring **102** to enable bending in a second plane (shown by arrows **118** in **FIG. 10A**). As **FIG. 10A** shows, the small diameter wire coils **104** and **106** may themselves be contained within the larger diameter steering coil **34** within the catheter body **14**.

[0068] Instead of steering wires **108/110** and **114/116**, either or both springs **100** and **102** could be attached to preshaped wires (not shown) to assume a desired curvature, to thereby bend the respective spring in the manner shown in **FIG. 4**. Alternatively, the compound steering assembly **28(4)** may includes a third, preshaped wire section (not shown), like that shown in **FIG. 4** located, either proximally or distally to the bendable springs **100** and **102**. In these arrangements, an external slidable sleeve (not shown) is used to selectively straighten the preshaped wire when desired. In this way, complex bends can be formed in the distal region in at least 3 different planes, or, alternatively, two bending locations can be provided in a single plane with another bending location being provided in an orthogonally separate plane.

[0069] **FIG. 11** shows an alternative embodiment of a compound steering assembly, designated **28(5)**, that reduces stiffness of the proximal section. The compound steering assembly **28(5)** includes two side-to-side guide coils **120** and **122**. A distal element **124** is soldered between the distal ends of the guide coils **120** and **122**, thereby collectively forming a distal bendable section **30**. A PET retaining sleeve **126** preferably holds the guide coils **120** and **122** together orthogonal to plane of the distal element **124**.

[0070] Distal steering wires **128** and **130** are attached to opposite sides of the distal element **124**. The steering wires **128** and **130** pass through the guide coils **120** and **122** and into the main guide coil **34** within the catheter body **14** for attachment to a control element on the handle. By applying tension to a steering wire **128** and **130**, the distal element **124** and guide coils **120** and **22** bend as a unified structure in the direction of the tensioned steering wire.

[0071] A proximal steering wire **132** is soldered to a transverse edge **134** of the distal element **124**. The proximal

steering wire **132** also extends into the main guide coil **34** within the catheter body **14** for attachment to another control element on the handle. By applying tension to the proximal steering wire **132**, the distal element **124** and guide coils **120** and **122** bend as a unified structure in a direction orthogonal to the direction controlled by the distal steering wires **128** and **130**. A second proximal steering wire (not shown) could be soldered to the opposite transverse edge of the distal element **124** for bi-directional steering.

[**0072**] **FIGS. 12 and 13** show another embodiment of a compound steering assembly, designated **28(6)** that embodies features of the invention. The steering assembly **28(6)** includes a preformed proximal section **136**, which maintains a predefined curve, thereby forming a bend in the distal region **16**. The distal end of the preformed proximal section **136** carries a ferrule **138**. The ferrule **138** includes a notch **140**. A bendable distal spring **142** fits within the notch **140**.

[**0073**] The distal spring **142** includes two oppositely attached steering wires **144** and **146**. Bi-directional bending of the spring **142** is thereby provided. Alternatively, a single steering wire could be provided for single directional bending.

[**0074**] A sleeve (not shown) made of Kevlar polyester or Kevlar Teflon or plain polyester preferable encircles the junction of the distal spring **142** and the ferrule **138** to strengthen the junction. Further details concerning the sleeve and the attachment of the spring to the distal end of the proximal section are contained in U.S. Pat. No. 5,257, 451, which is incorporated herein by reference.

[**0075**] As shown in **FIGS. 12 and 13**, the notched ferrule **138** holds the distal spring **142** in a plane that is generally orthogonal to the plane of the preshaped bend of the preformed proximal section **136**. The distal spring **142** therefore bends in two cross-plane directions, to the right and to the left of the proximal section **136** (as arrows **148** in **FIG. 13** show). Still, it should be appreciated that the notched ferrule **138** can be rotated to hold the distal spring **142** in any desired angular relationship with the preshaped proximal section **136**.

[**0076**] For example, **FIGS. 14 and 15** show the notch **140** of the ferrule **138** has been rotated to orient the distal spring **142** in generally the same plane as the preformed proximal section **136**. In this arrangement, the distal spring **142** is supported for bi-directional, in-plane bending, upward and downward of the preformed proximal section (as arrows **150** in **FIG. 15** show).

[**0077**] The proximal section **136** may be preformed into any desired curve, simple (as **FIGS. 12 and 13** and **FIGS. 14 and 15** show) or complex (as **FIG. 16** shows, without a distal spring **142** attached).

[**0078**] In the illustrated simple and complex curve embodiments, the proximal section **136** preferably comprises a braid tube **152** made of polyamide with wire braid, which is thermally formed into the desired shape. The preshaped proximal tube **152** preferably contains within it a guide coil **154**, through which the steering wires **144/146** for the distal spring **142** pass. The steering wires **144/146** may also be preshaped like the proximal section to prevent straightening the preformed proximal section.

[**0079**] In the illustrated and preferred embodiments shown in **FIGS. 12 and 13** and **FIGS. 14 and 15**, a flatwire **156** lends additional support to the preformed proximal section **136**. The flatwire **156** is formed in a preshaped curve matching corresponding to the proximal section **136**. The flatwire **156** is preferably bonded to the exterior of the proximal tube **152**. Also preferably, an exterior polyester shrink tube **158** encloses the flatwire **156** and proximal tube **152** to hold them intimately together. The polyester shrink tube **158** can also serve this purpose without first bonding the flatwire **156** to the proximal tube **152**. The assembly of the flatwire **156** and shrink tube **158** as just described can also be used in association with the complex curve shown in **FIG. 16**.

[**0080**] In an alternative embodiment (see **FIGS. 17 and 18**), a compound steering assembly, designated **28(7)** includes a proximal section **160** comprising a guide coil **166** that does not have a preset curvature. In this embodiment, the steering assembly **28(7)** includes a flatwire **162** preshaped into the desired curve. The precurved flatwire **162** includes a bracket **164** at its distal end designed to receive and support the guide coil **166**. The bracket **164** is spot welded to the guide coil **166**, thereby holding the guide coil **166** in a bent condition corresponding to the curve of the flatwire **162**. A heat shrink polyester tube (not shown) preferably encircles the flatwire **162** and guide coil **166** to hold them together. The preformed proximal section **136** is thereby formed.

[**0081**] The compound steering assembly **28(7)** includes a notched ferrule **138** like that shown in the preceding FIGS. **12** to **16**. The ferrule **138** is spot welded to the distal end of the guide coil **166** (see **FIG. 18**) to receive and support a distal bendable spring **142** and steering wires **144** and **146**, in the manner previously shown in FIGS. **12** to **16**. As before described, the notch **140** of the ferrule **138** can be rotated to orient the distal spring **142** in any desired orientation, either orthogonal to the curve axis of the preformed proximal section (as **FIG. 18** and preceding **FIGS. 12 and 13** show), or in plane with the curve axis of the preformed proximal section (as preceding **FIGS. 14 and 15** show), or any desired angular relationship in between.

[**0082**] Instead of using a preformed braid tube **152** and/or a flatwire **156/162** to preform the proximal section **136** in the manner above described, the proximal section **136** may take the form of a malleable tube, which can be bent by the physician into the desired simple or complex curvature.

[**0083**] As **FIG. 16** represents, the preformed proximal section **136** may be shaped in any simple 2-dimensional or complex 3-dimensional shape. Virtually any curvature can be selected for the proximal section end, provided that the curvature permits unimpeded movement of the steering wires **144/146** for the bendable distal spring **142**. Furthermore, the stiffness of the preformed proximal section **136** is controlled so that it readily yields for straightening during introduction, either through the vasculature or a guide sheath.

[**0084**] In vivo experiments demonstrate that the walls of the vasculature themselves provide enough force to straighten the proximal section **136** made according to the invention, to thereby enable easy advancement of the distal region **16** of the catheter body **14** through the vasculature. Guide sheaths may also be used, if desir d.

[**0085**] Entry of the distal region **16** of the catheter body **14** into the desired body cavity frees the proximal section **136**,

and it assumes its predef ined shape as previously described. The physician may now further manipulate the distal region **16** by rotating the catheter body **14** and/or bending the distal spring **142** to locate the ablation and/or sensing element(s) **18** at the desired tissue location(s).

[**0086**] The various compound steering assemblies **28(1)** to **28(7)** that the invention provides make it possible to locate the ablation and/or mapping electrode(s) at any location within the body cavity. With prior conventional catheter designs, various awkward manipulation techniques were required to position the distal region, such as prolapsing the catheter to form a loop within the atrium, or using anatomical barriers such as the atrial appendage or veins to support one end of the catheter while manipulating the other end, or torquing the catheter body. While these techniques can still be used in association with the compound assemblies **28(1)** to **28(7)**, the compound bendable assemblies **28(1)** to **28(7)** significantly simplify placing electrode(s) at the desired location and thereafter maintaining intimate contact between the electrode(s) and the tissue surface. The compound assemblies **28(1)** to **28(7)** make it possible to obtain better tissue contact and to access previously unobtainable sites, especially when positioning multiple electrode arrays.

[**0087**] Compound bendable assemblies **28(1)** to **28(7)** which provide a proximal curved section orthogonal to the distal steering plane allow the physician to access sites which are otherwise difficult and often impossible to effectively access with conventional catheter configurations, even when using an anatomic barrier as a support structure. For example, to place electrodes between the tricuspid annulus and the cristae terminalis perpendicular to the inferior vena cava and superior vena cava line, the distal tip of a conventional the catheter must be lodged in the right ventricle while the catheter is torqued and looped to contact the anterior wall of the right atrium. Compound bendable assemblies **28(1)** to **28(7)** which can provide a proximal curved section orthogonal to the distal steering plane greatly simplify positioning of electrodes in this orientation. Compound bendable assemblies **28(1)** to **28(7)** which provide a proximal curved section orthogonal to the distal steering plane also maintain intimate contact with tissue in this position, so that therapeutic lesions contiguous in the subepicardial plane and extending the desired length, superiorly and/or inferiorly oriented, can be accomplished to organize and help cure atrial fibrillation.

[**0088**] A transeptal approach will most likely be used to create left atrial lesions. In a transeptal approach, an introducing sheath is inserted into the right atrium through the use of a dilator. Once the dilator/sheath combination is placed near the fossa ovalis under fluoroscopic guidance, a needle is inserted through the dilator and is advanced through the fossa ovalis. Once the needle has been confirmed to reside in the left atrium by fluoroscopic guidance of radiopaque contrast material injected through the needle lumen, the dilator/sheath combination is advanced over the needle and into the left atrium. At this point, the dilator is removed leaving the sheath in the left atrium.

[**0089**] A left atrial lesion proposed to help cure atrial fibrillation originates on the roof of the left atrium, bisects the pulmonary veins left to right and extends posteriorly to the mitral annulus. Since the lesion described above is perpendicular to the transeptal sheath axis, a catheter which can place the distal steering plane perpendicular to the sheath axis and parallel to the axis of the desired lesion greatly enhances the ability to accurately place the ablation and/or mapping element(s) and ensure intimate tissue contact with the element(s). To create such lesions using conventional catheters require a retrograde procedure. The catheter is advanced through the femoral artery and aorta, past the aortic valve, into the left ventricle, up through the mitral valve, and into the left atrium. This approach orients the catheter up through the mitral valve. The catheter must then be torqued to orient the steering plane parallel to the stated lesion and its distal region must be looped over the roof of the left atrium to position the ablation and/or mapping element(s) bisecting the left and right pulmonary veins and extending to the mitral annulus. This awkward technique often fails to create adequate tissue contact necessary for therapeutic lesions.

[**0090**] Preformed guiding sheaths have also been employed to change catheter steering planes. However, preformed guiding sheaths have been observed to straighten in use, making the resulting angle different than the desired angle, depending on the stiffness of the catheter. Furthermore, a guiding sheath requires a larger puncture site for a separate introducing sheath, if the guiding sheath is going to be continuously inserted and removed. Additional transeptal punctures increase the likelihood for complications, such as pericardial effusion and tamponade.

[**0091**] While various preferred embodiments of the invention have been shown for purposes of illustration it will be understood that those skilled in the art may make modifications thereof without departing from the true scope of the invention as set forth in the appended claims.

[**0092**] For example, as **FIGS. 19A** to **19C** show a compound loop assembly **168** carried at the distal end of a catheter body **14**. The loop assembly **168** comprises at least two loop splines **168** and **170**.

[**0093**] The loop spline **168** carries an array of ablation elements **172**. According to the features of the invention described above, the loop spline **168** includes a proximal section **174** that is preformed into a desired curvature to access additional planes.

[**0094**] Since the loop spline **168** may be formed from memory elastic materials, the spline **168** may be preformed into any desired shape through mechanically forming the spline **168** and thermally forming the spline **168** in that shape. Preshaped braid tubing or other support may also be included to help maintain the shape of the proximal spline bend **174**, as previously described.

[**0095**] As **FIGS. 19B and 19C** show, the other spline **170** of the loop structure **168** may be retracted or advanced to decrease or increase the loop diameter to affect desired tissue contact and ablation element location.

[**0096**] The two splines **168** and **170** may be fabricated from a single wire made of nickel titanium or other memory elastic material. Alternatively, the two splines **168** and **170** may be fabricated from two or more wires which are connected by a distal tip at a common point. One spline may be attached to the catheter body, or two splines may be attached to the catheter body with another stylet to manipulate the preshaped loop, or both splines may be maneuvered.

[**0097**] Various features of the invention are set forth in the following claims.

What is claimed is:

1. A steerable catheter comprising

an elongated catheter body secured to a proximal handle and having a distal end carrying at least one functional element,

a unitary spring structure for steering said distal end comprising at least two orthogonally arranged flattened sections bendable normal to flattened planes of said sections,

said flattened sections being axially displaced along the length of said spring structure thereby comprising a proximal flattened section and a distal flattened section,

at least one steering wire being attached to each flattened section to apply bending forces thereto,

a coil spring having a hollow interior lumen extending along the length of said catheter body, a distal end of said coil spring being affixed to said proximal flattened section,

at least one steering wire extending distally from said distal end, said wire being attached to said distal flattened action for application of bending forces thereto, said steering wire having a proximal end connected to means in said handle for application of pulling forces of said wire, and

at least one steering wire being attached to said proximal flattened section for exertion of bending forces thereon.

2. A steerable catheter comprising

an elongated catheter body secured to a proximal handle and having a distal end carrying at least one functional element,

a distal steering assembly which includes a section containing a preshaped wire, said wire being biased to bend said assembly into a curvilinear shape in a first plane, and

a second steering mechanism independent from said preshaped wire which enables bending said assembly in a second plane that is non-parallel to the bending plane of the preshaped section.

3. A catheter according to claim 2 wherein said preshaped wire is located proximally to said second steering mechanism.

4. A catheter according to claim 2 wherein said preshaped wire is contained within an introducer tube for introduction into a living body, wherein said introducer tube retains said preshaped wire in a generally linear orientation.

5. A catheter according to claim 1 wherein said unitary spring structure comprises two orthogonally arranged segments which are soldered together to form said unitary structure.

6. A catheter according to claim 1 wherein a pair of steering wires is attached to each of said orthogonally arranged flattened sections.

7. A catheter according to claim 1 wherein a guide tube containing at least one of steering wires is attached to a proximal one of said flattened sections.

* * * * *