Nov. 9, 1943. R. L. GODSHALK 2,333,777

FLUID COOLED WALL CONSTRUCTION AND METHOD OF ASSEMBLING THE SAME

Filed Dec. 31, 1941 3 Sheets-Sheet 1

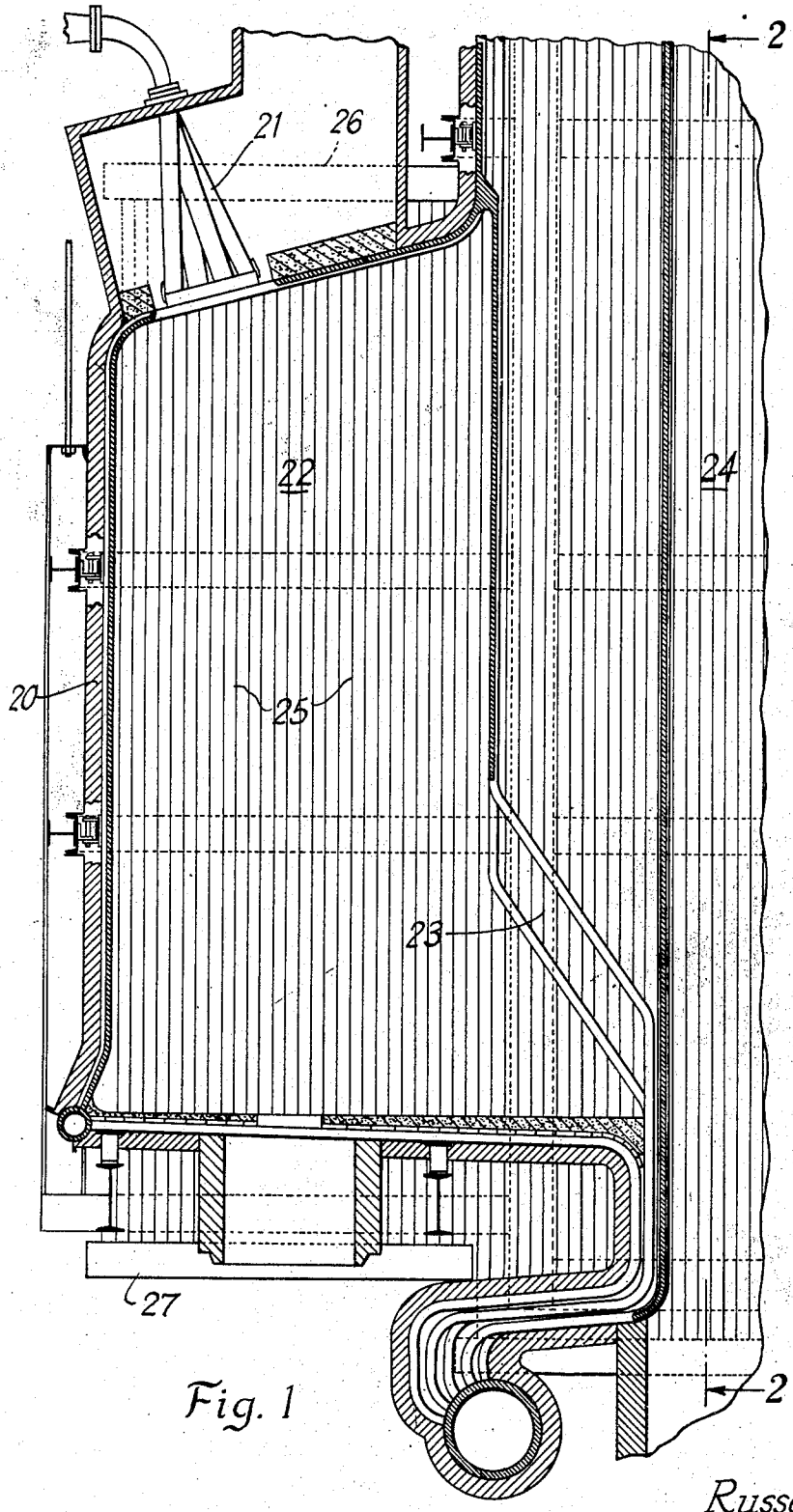

Fig. 1

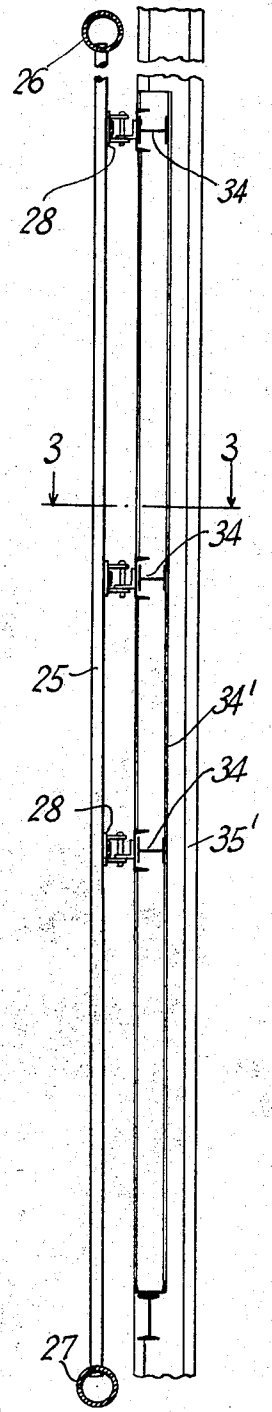

Fig. 2

INVENTOR.
Russell L. Godshalk
BY Joseph P. Moran
ATTORNEY

Nov. 9, 1943. R. L. GODSHALK 2,333,777

FLUID COOLED WALL CONSTRUCTION AND METHOD OF ASSEMBLING THE SAME

Filed Dec. 31, 1941 3 Sheets-Sheet 2

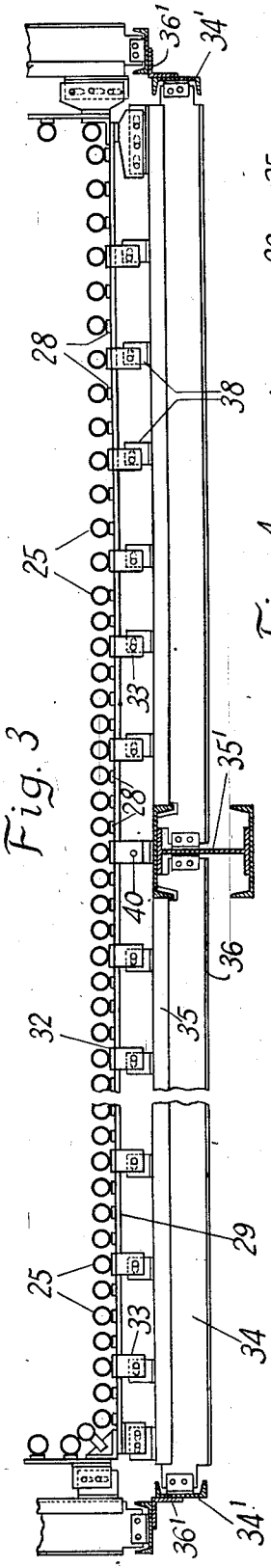

Fig. 3

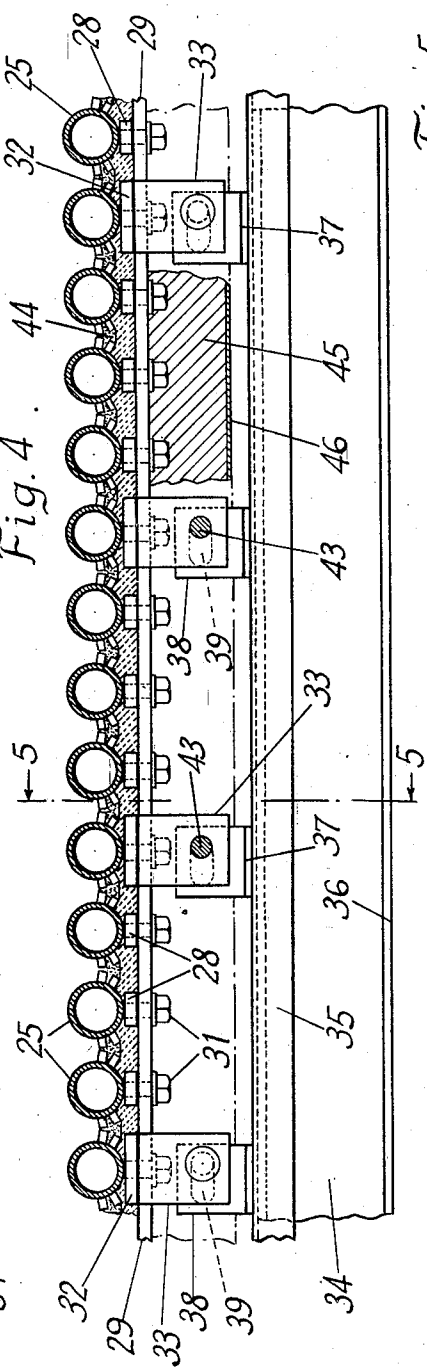

Fig. 4

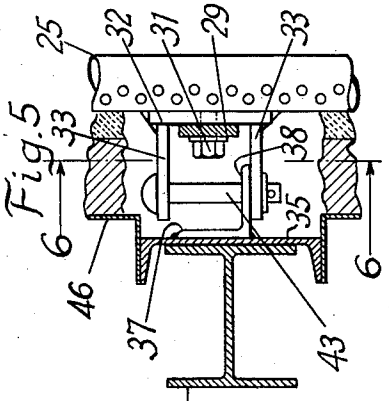

Fig. 5

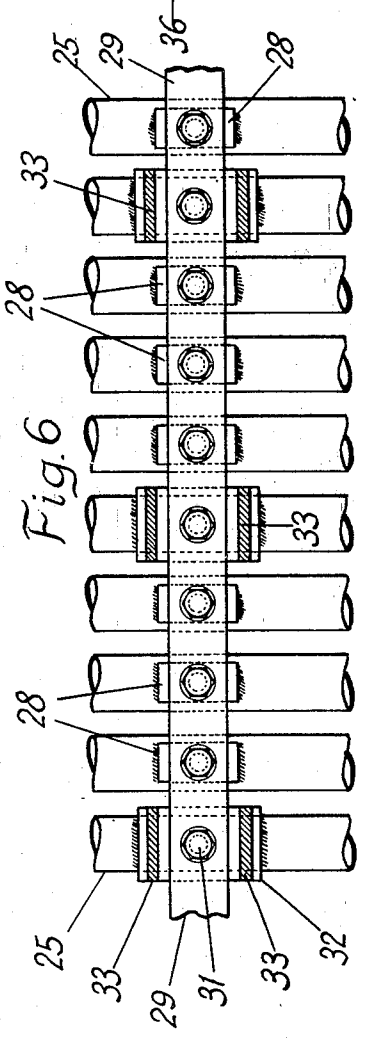

Fig. 6

INVENTOR.
Russell L. Godshalk

BY Joseph P. Moran
ATTORNEY

Nov. 9, 1943. R. L. GODSHALK 2,333,777

FLUID COOLED WALL CONSTRUCTION AND METHOD OF ASSEMBLING THE SAME

Filed Dec. 31, 1941 3 Sheets-Sheet 3

Fig. 8

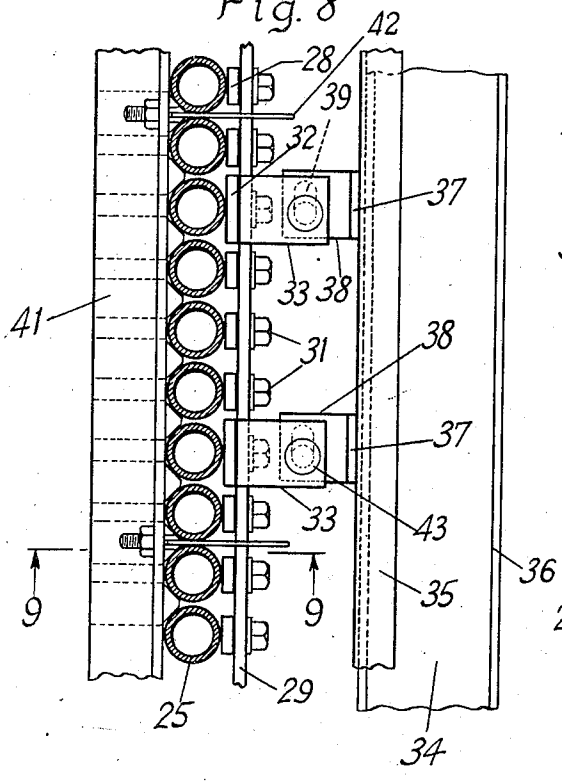

Fig. 7

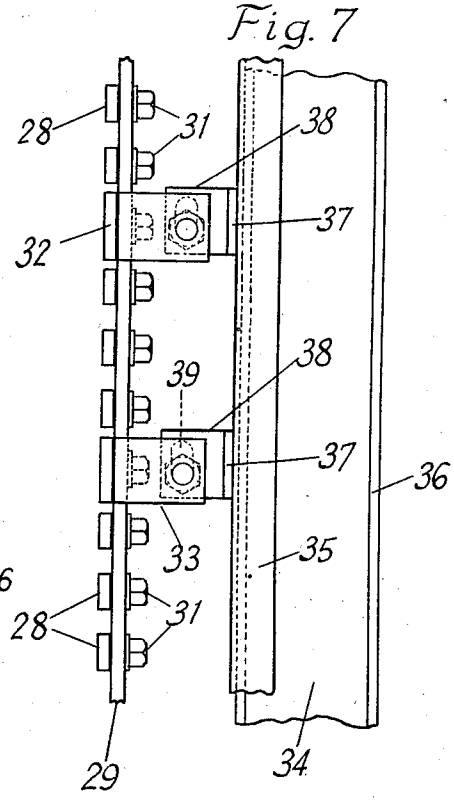

Fig. 9

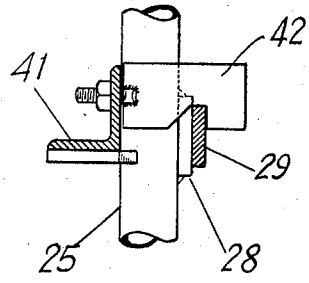

Fig. 10

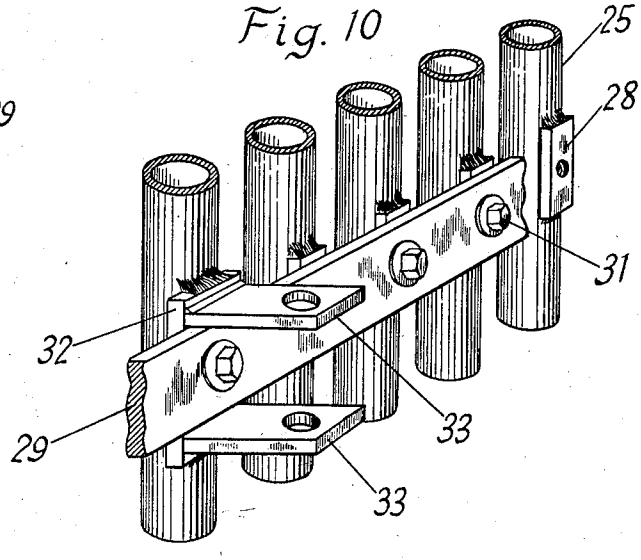

INVENTOR.
Russell L. Godshalk
BY
Joseph P. Moran
ATTORNEY

Patented Nov. 9, 1943

2,333,777

UNITED STATES PATENT OFFICE

2,333,777

FLUID COOLED WALL CONSTRUCTION AND METHOD OF ASSEMBLING THE SAME

Russell I. Godshalk, Akron, Ohio, assignor to The Babcock & Wilcox Company, Newark, N. J., a corporation of New Jersey

Application December 31, 1941, Serial No. 425,044

6 Claims. (Cl. 122—6)

This invention relates to heat exchange apparatus and more particularly to the type used for cooling the walls of fuel-fired furnaces and consisting of a row of fluid heating tubes having their ends connected to suitable inlet and outlet headers.

Where a row of these tubes together with suitable intertube closures as, for example, studs and refractory, and the outer enclosure of insulation and the like, are assembled to form a vertical furnace wall, the tubes and wall are subject in operation to longitudinal expansion and contraction and to outward thrust resulting from changes in furnace pressure and thermal expansion of associated walls and partitions. The inherent rigidity of the tubes and wall is therefore augmented by vertical and lateral supports arranged to hold the wall parts in the desired assembled position and prevent warping or buckling of the tubes while permitting thermal expansion and contraction thereof in the plane of the wall.

Heretofore in wall constructions of the character described, the tubes have been connected to common tie bars spaced along their length in a manner permitting the removal or replacement of any given tube when disconnected from its headers without disturbing other tubes in the wall assembly. The tie bars in turn, are supported on suitably located horizontal buckstay members which permit lateral and vertical movements of the tubes and wall in the plane of the wall due to temperature changes. The buckstays are mounted on vertical steel supporting members. For its connections to the tie bars each tube has metal plates or pads welded to the tube in the shop at spaced points along its length and connected to the tie bars in the field at the time of erection.

This construction frequently causes considerable trouble when the tubes and other wall parts are assembled in the field, due sometimes to the fact that the support members are not of the proper shape and dimensions and, therefore, are out of alignment with the rows of pads welded to the tubes, and at other times to the fact that the pads on the tubes are not in alignment with the corresponding tie bars. This latter condition usually results from improper location of the pads on the tubes when welded in the shop, or from the operation of expanding the tubes into the headers where a slight longitudinal displacement of a tube may be required in order to obtain a good pressure-tight expanded joint beween the tube and the header. Any of these errors prevents quick and accurate assembly of the wall parts and as the errors must be corrected in the field, erection costs are considerably increased.

The main object of this invention is to provide a method of assembling a wall structure of the type set forth which eliminates the need for costly corrections or the like in the field, yet without any sacrifice in tolerance or workmanship and without increasing the number of operations previously required to erect an installation having perfectly formed and located parts.

A further object is to provide an improved construction of the parts employed in connecting each tie bar to a supporting buckstay to permit thermal expansion and contraction of the tubes, tie-bars and other wall parts.

These and other objects which will be apparent to those skilled in the art are accomplished by this invention, embodiments of which are illustrated in the accompanying drawings, in which,

Fig. 1 is a vertical sectional view through part of a steam generating unit having fluid cooled walls constructed and assembled in accordance with the invention;

Fig. 2 is a section through a top-supported side wall of the unit shown in Fig. 1, taken on the line 2—2 of Fig. 1, some of the parts being omitted for clarity;

Fig. 3 is a horizontal section taken on the line 3—3 of Fig. 2;

Fig. 4 is a similar view on an enlarged scale showing the invention as applied to a portion of the wall having studded tubes;

Fig. 5 is a transverse section on the line 5—5 of Fig. 4;

Fig. 6 is a section on the line 6—6 of Fig. 5 with parts omitted, showing the tie bar and tubes in elevation;

Fig. 7 is a plan view of the tie bar and buckstay assembly in position before the connection thereto of a row of closely spaced bare tubes;

Fig. 8 is a view similar to Fig. 7 showing a further step in the assembly operation;

Fig. 9 is a vertical section taken on the line 9—9 of Fig. 8; and

Fig. 10 is a perspective view showing the welding of the tubes to the pads and plates.

As illustrated, the invention is shown in connection with a steam generating unit 20 having a pulverized fuel burner 21 directed downwardly into a fluid cooled furnace chamber 22, and a screened opening 23 leading to a fluid cooled gas passage 24, although it will be apparent that various features of the invention can be employed in a wide variety of installations.

As illustrated, a row of vertical water tubes 25 lining the side walls of the furnace and open pass 24 are expanded into upper and lower headers 26 and 27, respectively, the unit as a whole being top-supported so that on thermal expansion, the lower ends of the tubes will be relatively free to move downwardly. When assembled each tube is welded to one or more metal plates or pads 28 which are removably secured to horizontal tie bars 29 by any suitable means such, for example, as cap screws 31. At regular intervals along each tie bar a pad is supplanted by a spacer lug plate 32 having outwardly extending parallel spacer lugs 33 welded thereon, each plate being welded to an associated tube and secured to the tie bar 29 in the same manner as the pads 28.

A horizontally disposed steel member or buckstay 34, shown in the drawings as formed by a channel 35 and I-beam 36, as shown in Fig. 5, extends along the side wall adjacent each tie bar. As illustrated in Fig. 3, each buckstay member is supported at one end on a vertical corner member 34' and at its opposite end adjacent the center of the corresponding wall on a vertical member 35'. The corner members 34' are top-supported and carry only the vertical load of the buckstays and casing, permitting outward movement of the tubes and wall as a unit. A two-way slip seal 36' connects adjacent corner members. The tie bar ends at the corners are also connected to one another. The vertical member 35' has its top and bottom connected to pressure parts permitting outward movement with the associated wall. Each tie bar is connected to the associated buckstay so as to permit relative movement between them in the plane of the furnace wall as a result of the expansion and contraction of the tubes and furnace wall while preventing relative movement in a plane perpendicular to the wall. As shown, a series of clips in the form of horizontal angles 37 are welded or otherwise secured to the buckstay opposite each pair of lugs 33, and each clip has a horizontal flange 38 provided with a slot 39 extending parallel to the buckstay and tie bar. As shown in Fig. 3, at a predetermined position along the wall one of the clips has a round rivet hole 40 in its horizontal flange so that horizontal expansion of the wall in its own plane may take place in opposite directions from this point and the slots 39 are arranged accordingly. A rivet 43 extending through holes in each pair of lugs 33 and the corresponding slot 39 removably connects each spacer plate 32 and tie bar 29 to the buckstay while permitting relative movement therebetween in directions parallel to the plane of the wall.

In erecting installations of this type in accordance with the present invention, the pads 28 are not welded to the wall tubes in the shop as heretofore but, on the contrary, are secured in place on the tie bars by the cap screws 31 in the shop before the tie bars are shipped. The lug plates 32 are similarly secured on the tie bar at that time.

In erecting a furnace wall in accordance with this invention, the structural steel members 34' and 35' and the buckstays 34 are first put in place. The horizontal tie bar assemblies, shipped with the pads 28 and lug plates 32 bolted on the tie bars, are then mounted in position on the buckstays by inserting temporary erection bolts through the slots 39 in the clip flanges 38 and the holes in one of each pair of spacer lugs 33. When the wall is top-supported as described, the parts are arranged with each clip flange 38 above and bolted to the lower lug 33 to permit relative downward but not upward movement of the tubes. Each tie bar is secured rigidly in place by this means so that the inner faces of the associated pads 28 and lug plates 32 will lie in a plane tangent to the outer faces of the wall tubes when the latter are subsequently installed. The tubes 25 are then located in properly spaced position and expanded into the header tube holes in the usual way to produce pressure-tight connections. The tubes are then clamped tightly against the faces of the pads 28 and the plates 32 by any suitable means such, for example, as the strong back and tube spacer 41 and hook clamps 42, as illustrated in Figs. 8 and 9. When so clamped the tubes are integrally secured to the pads 28 and the plates 32 by welding as, for example, the deposit of weld metal at the upper and lower edges thereof, as shown in Fig. 10, after which the strong back and clamps are removed. The temporary bolts connecting the spacer lugs 33 and the clip angles 38 are then removed and the rivets 43 and associated washers and cotter pins are substituted permitting horizontal and downward expansion of the tubes and wall in the plane of the wall to an extent limited only by the effective lengths of the slots 39 and rivets 43, the horizontal expansion being in opposite directions from the center hole 40 shown in Fig. 3.

It is apparent that this method of assembling the wall compensates for irregularities in dimensions of the component parts normally encountered in fabricating this class of work without the expense or delay heretofore involved in adjusting misfitting parts, and forestalls any need of having to correct in the field any improperly located or dimensioned part. The tube ends can thus be expanded into the headers without regard to pad alignment.

As indicated in Fig. 4, the spaces between the tubes are usually filled with plastic refractory 44 which is applied after the tubes are in place. The usual block insulation 45, is also provided, as well as an outer metal casing 46.

When the buckstays are fixed in position so that no outward movement of the tubes and wall is permitted, the necessary alignment of the pads 28 and lug plates 32 is secured by bolting the vertical flanges of the clip angles to the channel section of each buckstay and using shims therebetween as needed.

It will be apparent that the invention can be variously modified and adapted within the scope of the appended claims.

I claim:

1. The method of field assembling a wall having a row of vertical tubes extending between headers and connected to an intermediate transverse tie bar, which comprises installing the tie bar with tube-contacting pads mounted thereon at points spaced along the length thereof, installing said tubes in said headers with one side thereof in contact with said pads, and then rigidly securing said tubes to said pads.

2. The method of assembling a furnace wall having a row of vertical fluid cooled tubes along the furnace side thereof and connected to transverse headers, which comprises securing a series of tube-contacting pads at points spaced along the length of a common tie bar, installing said tie bar intermediate said headers and with one face of said pads in position to properly locate said tubes when in contact therewith, installing

said wall tubes in said headers, and then rigidly securing said tubes to said pads.

3. The method of assembling a furnace wall having tubes supported between headers on transverse tie bars, which comprises removably securing a series of tube-engaging pads in predetermined spaced relation along a tie bar, installing said tie bar with the faces of said pads in a plane tangent to the outer faces of said tubes when in operative position, installing said tubes in said headers at a spacing corresponding to the spacing of said pads along said tie bar, holding said tubes in contact with said pads, and then welding said tubes to said pads.

4. The method of assembling a furnace wall having a row of vertical tubes along the furnace side thereof and connected to transverse headers, which comprises removably securing a series of tube-contacting pads and spacer lug plates in predetermined spaced relation along a common tie bar, mounting said tie bar horizontally on a supporting buckstay by means of a temporary rigid connection and with one side of said pads and plates in a vertical plane tangent to the outer sides of said tubes when in operative position, installing said wall tubes in said headers at a spacing corresponding to the spacing of said pads and plates along said tie bar, holding said tubes in contact with said pads and plates, then welding said tubes to said pads and plates, and connecting said tie bar and buckstay to permit relative movement of said tubes in the plane of said wall.

5. The combination in a furnace wall having a row of parallel fluid cooled tubes, of a transverse tie bar, tube-contacting pads mounted on said tie bar and secured to said tubes, a lug plate mounted on one of said tubes and secured to said bar, a spacer lug mounted on and extending outwardly from said plate, a supporting buckstay, and means for connecting said lug to said buckstay to permit relative vertical and horizontal movement therebetween including a slotted flange mounted on said buckstay and positioned adjacent said lug, and a pin extending through said lug and the slot of said flange.

6. The combination in a furnace wall having a row of top-supported vertical fluid cooled tubes, of a horizontal tie bar, tube-contacting pads mounted on said bar and secured to said tubes, parallel lugs mounted on and extending outwardly from said tie bar, a supporting buckstay, and means connecting said lugs to said buckstay to permit downward and horizontal movements of said tubes relative to said buckstay including a slotted flange horizontally mounted on said buckstay and positioned between said lugs, and a vertical pin extending through said lugs and the slot of said flange.

RUSSELL L. GODSHALK.