SCIENCE REFERENCE AND INFORMATION SERVICE

(19) Europäisches Patentamt
European Patent Office
Office européen des brevets

(11) Publication number : **0 396 492 B1**

(12) # EUROPEAN PATENT SPECIFICATION

(45) Date of publication of patent specification : **19.01.94 Bulletin 94/03**

(51) Int. Cl.^{5} : **E05B 27/00**

(21) Application number : **90630030.6**

(22) Date of filing : **01.02.90**

ERRATUM

DIE TEXTSTELLE: TEXT PUBLISHED: LE PASSAGE SUIVANT:	SEITE PAGE PAGE	SPALTE COLUMN COLONNE	ZEILE LINE LIGNE	LAUTET BERICHTIGT: SHOULD READ: DEVRAIT ETRE LU:
and undesired alignment	4	5	49	and undesired misalignment
unerwünschten Ausrichtung in bezug auf	4	6	51	unerwünschten Fehlausrichtung in Bezug auf
son alignement indésiré	5	7	56	son défaut d'alignement indésiré

AMENDED SPECIFICATION ORIGINAL FILED BEHIND

Korrekturhinweis im Patentblatt Nr.
Mention of correction in Patent Bulletin No. **9415**
Mention de la correction dans le bulletin n°

veröffentlicht am
published on **13.04.94**
publié le

THE BRITISH LIBRARY
REFERENCE AND INFORMATION SERVICE

(19) Europäisches Patentamt
European Patent Office
Office européen des brevets

(11) Publication number : **0 396 492 B1**

(12) # EUROPEAN PATENT SPECIFICATION

(45) Date of publication of patent specification : **19.01.94 Bulletin 94/03**

(51) Int. Cl.[5] : **E05B 27/00**

(21) Application number : **90630030.6**

(22) Date of filing : **01.02.90**

AMENDED
SPECIFICATION
FILED IN FRONT.

(54) **Cylinder lock.**

(30) Priority : **05.05.89 IL 90211**

(43) Date of publication of application : **07.11.90 Bulletin 90/45**

(45) Publication of the grant of the patent : **19.01.94 Bulletin 94/03**

(84) Designated Contracting States : **AT BE CH DE DK ES FR GB GR IT LI LU NL SE**

(56) References cited :
EP-A- 0 238 442
EP-A- 0 297 929
DE-B- 1 122 866
US-A- 3 494 158

(73) Proprietor : **MUL-T-LOCK LTD.**
Southern Industrial Zone, POB 465
Yavne 70 653 (IL)

(72) Inventor : **Eizen, Noach**
34 Ben Gurion Street
Rishon Lezion (IL)

(74) Representative : **Weydert, Robert et al**
OFFICE DENNEMEYER S.à.r.l. P.O. Box 1502
L-1015 Luxembourg (LU)

EP 0 396 492 B1

Note : Within nine months from the publication of the mention of the grant of the European patent, any person may give notice to the European Patent Office of opposition to the European patent granted. Notice of opposition shall be filed in a written reasoned statement. It shall not be deemed to have been filed until the opposition fee has been paid (Art. 99(1) European patent convention).

Description

FIELD OF THE INVENTION

The present invention relates to cylinder locks generally and more particularly to cylinder locks of the pin tumbler type.

BACKGROUND OF THE INVENTION

A wide variety of cylinder locks of the pin tumbler type are known. In an effort to provide enhanced security, cylinder locks having a plurality of coaxial pins in each chamber have been developed. Locks of this description are disclosed in U.S. Patents 593,436; 1,095,500; 3,818,732; 3,494,158; and 4,142,389. Such locks, while providing a relatively high level of security, have a severe cost disadvantage in that they are extremely difficult and time consuming to assemble, master and service.

SUMMARY OF THE INVENTION

The present invention seeks to provide a high security cylinder lock having multiple pins in each chamber and which overcomes the disadvantages of prior art cylinder locks of this type.

There is thus provided in accordance with the present invention a cylinder lock including a housing and a plug disposed in the housing and arranged for rotation relative thereto, a first plurality of chambers formed in the housing and a second plurality of chambers formed in the plug and arranged such that each one of the first plurality of chambers extends coaxially with a corresponding one of the second plurality of chambers, when the plug is in a first rotational orientation relative to the housing, a first multi-element pin assembly being disposed in said first plurality of chambers and a second multi-element pin assembly being disposed in said second plurality of chambers, the first multi-element pin assembly including an outer pin element having an axial recess and an inner pin element disposed for selectable axial orientation relative to the outer pin element and apparatus for retaining the inner pin element against disengagement from and undesired misalignment with respect to the outer pin element, the means for retaining being operative to permit the end of the inner pin element facing the plug to be disposed either substantially outwardly or substantially inwardly of the end of the outer pin element facing the plug.

In accordance with a preferred embodiment of the present invention, the inner and outer pin elements are spring loaded with respect to each other.

Further in accordance with a preferred embodiment of the invention the apparatus for retaining the inner pin element comprises an axial extension of the inner pin element which slidably extends through a portion of the outer pin element and is configured so as not to be normally separable therefrom.

It is a particular feature of the present invention that the use of the multi-element pin assembly having retaining apparatus enables automated or semiautomated assembly of the lock to be practical and greatly simplifies mastering and servicing the lock.

Additionally in accordance with a preferred embodiment of the invention, the plug is formed with a plurality of circumferential grooves thereby defining a non-straight shear line between the housing and the plug.

BRIEF DESCRIPTION OF THE DRAWINGS

The present invention will be understood and appreciated more fully from the following detailed description, taken in conjunction with the drawings in which:

Fig. 1 is a side sectional illustration of a cylinder lock constructed and operative in accordance with a preferred embodiment of the present invention;

Fig. 2 is an enlarged sectional illustration of the lock of Fig. 1, taken along the lines II - II in Fig. 1.

Figs. 3A, 3B and 3C illustrate three alternative embodiments of multi-element pin assemblies constructed and operative in accordance with a preferred embodiment of the present invention;

Figs. 4A, 4B and 4C illustrate three alternative embodiments of multi-element pin assemblies constructed and operative in accordance with a further preferred embodiment of the present invention; and

Figs. 5A, 5B and 5C illustrate three alternative embodiments of multi-element pin assemblies constructed and operative in accordance with still a further preferred embodiment of the present invention.

DETAILED DESCRIPTION OF PREFERRED EMBODIMENTS

Reference is now made to Figs. 1 and 2, which illustrate a cylinder lock constructed and operative in accordance with a preferred embodiment of the present invention and comprising a housing 10 in which is defined a plug 12. As illustrated in Fig. 1, the plug 12 is formed with circumferential grooves to present a non-linear shear line therebetween.

The housing 10 and the plug 12 are formed with respective complementary housing chambers 14 and plug chambers 16, plug chambers 16 communicating with a keyway 18 in which is shown disposed a key 20. Housing chambers 14 communicate with the outer peripheral surface of housing 10 and are preferably closed by a removable sealing strip 22. The housing

10 preferably comprises an escutcheon 26 and a hardened pin 28. Pin 28 serves to prevent drilling damage to the cylinder.

Disposed in each of plug chambers 16 is a multi-element plug pin assembly 30 comprising a core pin element 32 and a peripheral pin element 34 having an aperture 36 through which slidably extends core pin element 32. Additionally, respective internal and external mastering disks 38 and 24 may be provided as appropriate.

Disposed in each of housing chambers 14 is a multi-element housing pin assembly 40 comprising a core pin element 42 and a peripheral pin element 44 having an aperture 46 through which slidably extends an extension 48 of core pin element 42. It is a particular feature of the present invention that disengagement of core pin element 42 from peripheral pin element 44 is prevented. In the illustrated embodiment, such disengagement is prevented by broadening the extreme end 49 of extension 48 so that it cannot pass through aperture 46. Alternatively, any other suitable means for preventing disengagement of the core pin element 42 from the peripheral pin element 44 and for maintaining them in generally coaxial alignment may be provided.

In accordance with the present invention, a compression spring 50 is disposed between core pin element 42 and peripheral pin element 44 such that the two elements are urged to a relative orientation whereby end 49 is drawn towards aperture 46. Another compression spring 52 is provided between the peripheral pin element 44 and the sealing strip 22 for urging the entire multi-element housing pin assembly towards the shearing line and towards chambers 16.

It is a particular feature of the present invention that, due to the fact that the housing pin assembly 40 is constructed so as to prevent undesired and inadvertent disengagement and misalignment thereof, assembly, mastering and servicing of the lock of Fig. 1 is greatly simplified and automated assembly of the lock and of the pin assembly may be realized, producing very significant cost savings.

Reference is now made to Figs. 3A, 3B and 3C which illustrate various embodiments of multi-element pin assemblies useful in the present invention. Fig. 3A illustrates an embodiment of the type illustrated in Figs. 1 and 2 wherein the extension 48 is a separate element from core pin 42 and is embedded therein. Alternatively, pin 42 and extension 48 may be unitarily formed as in Figs. 5A, 5B and 5C.

Fig. 3B illustrates a three part multi-element pin assembly 60 including a core pin element 62, an intermediate peripheral pin element 64 and an outer peripheral pin element 66. An extension 68 of pin element 62 is provided with two compression springs, spring 70, disposed between elements 64 and 66 and spring 72, disposed between pin elements 62 and 64.

Fig. 3C illustrates a four part multi-element pin assembly 80 including a core pin element 82, a first intermediate peripheral pin element 84, a second intermediate peripheral pin element 85 and an outer peripheral pin element 86. An extension 88 of pin element 82 is provided with three compression springs, spring 90, disposed between elements 85 and 86, spring 92 disposed between elements 84 and 85, and spring 94, disposed between pin elements 82 and 84.

Assembly of the multi-element pin assemblies of Figs. 3A - 3C may be achieved by first assembling the various pin elements onto each other with the corresponding springs and then joining the extension to the core pin element. Alternatively, when the extension is integrally formed with the core pin element, as in Figs. 5A-5C, following assembly, the extreme end of the extension may be broadened, as by impact, such as hammering, or by any other suitable process.

Reference is now made to Figs. 4A, 4B and 4C which illustrate various alternative embodiments of multi-element pin assemblies useful in the invention. Fig. 4A illustrates a two part embodiment of the type illustrated in Figs. 1 and 2 but wherein the extension and aperture are replaced by a retaining ring 100 seated in a groove 102 formed in a core pin 104. Core pin 104 is retained against disengagement from a peripheral pin element 106 by engagement of retaining ring 100 by a shoulder 107 defined in the peripheral pin element 106. A compression spring 108 urges core pin element 104 forward as shown.

Fig. 4B illustrates a three part multi-element pin assembly 110 including a core pin element 112, an intermediate peripheral pin element 114 and an outer peripheral pin element 116. Each of the pin elements 112 and 114 is formed with a circumferential groove 118 in which is seated a retaining ring 120. Element 112 is retained within peripheral pin element 114 by means of engagement of the corresponding retaining ring 120 with a shoulder 122 formed in element 114. Element 114 is retained within element 116 by engagement of the corresponding retaining ring 120 with a shoulder 124 formed in element 116. Two compression springs are provided: spring 126, disposed between elements 112 and 114 and spring 128, disposed between pin elements 114 and 116.

Fig. 4C illustrates a four part multi-element pin assembly 130 including a core pin element 132, a first intermediate peripheral pin element 134, a second intermediate peripheral pin element 136 and an outer peripheral pin element 138. Each of the pin elements 132, 134 and 136 is formed with a circumferential groove 140, in each of which is seated a retaining ring 142.

Element 132 is retained within peripheral pin element 134 by means of engagement of the corresponding retaining ring 142 with a shoulder 144 formed in element 134. Element 134 is retained within element 136 by engagement of the corresponding retaining ring 142 with a shoulder 146 formed in ele-

ment 136. Element 136 is retained within element 138 by engagement of the corresponding retaining ring 142 with a shoulder 148 formed in element 138. Three compression springs are provided: spring 150, disposed between elements 132 and 134, spring 152, disposed between elements 134 and 136, and spring 154, disposed between pin elements 136 and 138.

Assembly of the apparatus of Figs. 4A - 4C may be effected by forcing the relatively interior pin elements with their retaining rings into the relatively exterior pin elements until past the corresponding shoulder.

Figs. 5A-5C illustrate an embodiment of the type illustrated in Figs. 1 and 2 wherein the extension 48 is integrally formed with central pin 42. This embodiment resembles the embodiment of Figs. 3A -3C, respectively, in all other respects. For convenience, similar reference numbers to the numbers used in Figs. 3A-3C have been used in Figs. 5A - 5C to indicate corresponding elements.

Claims

1. A cylinder lock comprising:

   a housing (10); a plug (12) disposed in the housing (10) and arranged for rotation relative thereto; a first plurality of chambers (14) formed in the housing (10); and a second plurality of chambers (16) formed in the plug (12) and arranged such that one of the first plurality of chambers (14) extends coaxially with a corresponding one of the second plurality of chambers (16), when the plug (12) is in a first rotational orientation relative to the housing (10); the cylinder lock characterised by:

   a first multi-element pin assembly (40) disposed in each chamber of the housing (10) and a second multi-element pin assembly (30) disposed in each chamber of the plug (12), each multi-element pin assembly comprising an outer pin element (44, 34) and a corresponding inner pin element (42, 32) disposed for selectable axial orientation relative to the corresponding outer pin element (44, 34); and means (48, 49) for retaining the inner pin element (42) of the first multi-element pin assembly against disengagement from and undesired alignment with respect to the corresponding outer pin element (44), the means (48, 49) for retaining being operative to permit the end of the inner pin element (42) facing the plug (12) to be disposed either substantially outwardly or substantially inwardly of the end of the outer pin element (44) facing the plug (12).

2. A cylinder lock according to claim 1, characterised in that the inner pin element (42) and the outer pin element (44) of the first multi-element pin assembly (40) are spring (50) loaded with respect to one another.

3. A cylinder lock according to claim 1 or claim 2, characterised in that the means for retaining the inner pin element (42) of the first multi-element pin assembly (40) comprises an axial extension (48) of the inner pin element which slidably extends through the rear-ward end (46) of the outer pin element and is configured so as not to be normally separable therefrom.

4. A cylinder lock according to any of claims 1 to 3, characterised in that the plug (12) is formed with a plurality of circumferential grooves (24) thereby defining a non-straight shear line between the housing (10) and the plug.

Patentansprüche

1. Zylinderschloß mit:
   einem Gehäuse (10); einem Zylinderkern (12), der in dem Gehäuse (10) angeordnet und relativ zu diesem drehbar ist; einer ersten Anzahl von Kammern (14), die in dem Gehäuse (10) gebildet sind; und einer zweiten Anzahl von Kammern (16), die in dem Zylinderkern (12) gebildet und so angeordnet sind, daß eine Kammer, der ersten Anzahl von Kammern (44) sich koaxial zu einer entsprechenden Kammer der zweiten Anzahl von Kammern (16) erstreckt, wenn der Zylinderkern (12) in einer ersten Drehorientierung relativ zu dem Gehäuse (10) ist; wobei das Zylinderschloß gekennzeichnet ist durch:
   eine erste Multielementstiftbaugruppe (40), die in jeder Kammer des Gehäuse (10) angeordnet ist, und eine zweite Multielementstiftbaugruppe (30), die in jeder Kammer des Zylinderkerns (12) angeordnet ist, wobei jede Multielementstiftbaugruppe ein äußeres Stiftelement (44, 34) und ein entsprechendes inneres Stiftelement (42, 32), das zur wählbaren axialen Orientierung relativ zu dem entsprechenden äußeren Stiftelement (44, 34) angeordnet ist, aufweist; und eine Halteeinrichtung (48, 49) zum Hindern des inneren Stiftelements (42) der ersten Multielementstiftbaugruppe am Trennen von dem entsprechenden äußeren Stiftelement (44) und an einer unerwünschten Ausrichtung in bezug auf das äußere Stiftelement, wobei die Halteeinrichtung (48, 49) bewirkt, daß das Ende des inneren Stiftelements (42), das dem Zylinderkern (12) zugeordnet ist, entweder im wesentlichen außerhalb oder im wesentlichen innerhalb des Endes des äußeren Stiftelements (44), das dem Zylinderkern (12) zugeordnet ist, angeordnet sein kann.

2. Zylinderschloß nach Anspruch 1, dadurch gekennzeichnet, daß das innere Stiftelement (42) und das äußere Stiftelement (44) der ersten Multielementstiftbaugruppe (40) in bezug aufeinander federbelastet (50) sind.

3. Zylinderschloß nach Anspruch 1 oder Anspruch 2, dadurch gekennzeichnet, daß die Halteeinrichtung für das innere Stiftelement (42) der ersten Multielementstiftbaugruppe (40) einen axialen Fortsatz (48) des inneren Stiftelements aufweist, der sich verschiebbar durch das hintere Ende (46) des äußeren Stiftelements erstreckt und so ausgebildet ist, daß er von demselben normalerweise nicht trennbar ist.

4. Zylinderschloß nach einem der Ansprüche 1 bis 3, dadurch gekennzeichnet, daß der Zylinderkern (12) mit einer Vielzahl von Umfangsnuten (24) versehen ist, wodurch eine ungerade Trennungslinie zwischen dem Gehäuse (10) und dem Zylinderkern gebildet ist.

Revendications

1. Serrure à barillet comprenant:

un boîtier (10), un tampon (12) disposé dans le boîtier (10) et conçu pour tourner par rapport à celui-ci; un premier ensemble de chambres (14) réalisé dans le boîtier (10) et un deuxième ensemble de chambres (16) réalisé dans le tampon (12) et disposé de façon que chacune des chambres du premier ensemble (14) soit disposé coaxialement par rapport à une chambre du deuxième ensemble de chambres (16) quand le tampon (12) se trouve dans une première position de rotation par rapport au boîtier (10), la serrure à barillet étant caractérisée par:

un premier assemblage de broche à éléments multiples (40) disposé dans chaque chambre du boîtier (10) et un deuxième ensemble de broche à éléments multiples (30) disposé dans chaque chambre du tampon (12), chaque assemblage de broche à éléments multiples comprenant un élément à broche extérieur (44, 34) et un élément à broche intérieur correspondant (42, 32) disposé pour permettre une orientation axiale sélectionnable par rapport à l'élément à broche extérieur correspondant (44, 34) et des moyens (48, 49) pour retenir l'élément à broche intérieur (42) du premier assemblage de broche à éléments multiples contre son dégagement de l'élément à broche extérieur correspondant (44) et son alignement indésiré par rapport à celui-ci, les moyens (48, 49) de retient pouvant fonctionner pour permettre que l'extrémité de l'élément à broche intérieur (42) tourné vers le tampon (12) soit disposé soit essentiellement à l'extérieur, soit essentiellement à l'intérieur de l'extrémité de l'élément à broche extérieur (44) tourné vers le tampon (12).

2. Serrure à barillet selon la revendication 1, caractérisé en ce que l'élément à broche intérieur (42) et l'élément à broche extérieur (44) du premier assemblage de broche à éléments multiples (40) sont poussés par ressort (50) l'un vers l'autre.

3. Serrure à barillet selon la revendication 1 ou la revendication 2, caractérisée en ce que le moyen pour retenir l'élément à broche intérieur (42) du premier assemblage de broche à éléments multiples (40) comprend un prolongement axial (48) de l'élément à broche intérieur qui coulisse dans l'extrémité arrière (46) de l'élément à broche extérieur et est configuré de façon à ne pas être séparable de celui-ci dans les conditions normales.

4. Serrure à barillet selon l'une quelconque des revendications 1 à 3, caractérisée en ce que le tampon (12) comporte plusieurs rainures périphériques (24) qui définissent une ligne de séparation non rectiligne entre le boîtier (10) et le tampon.

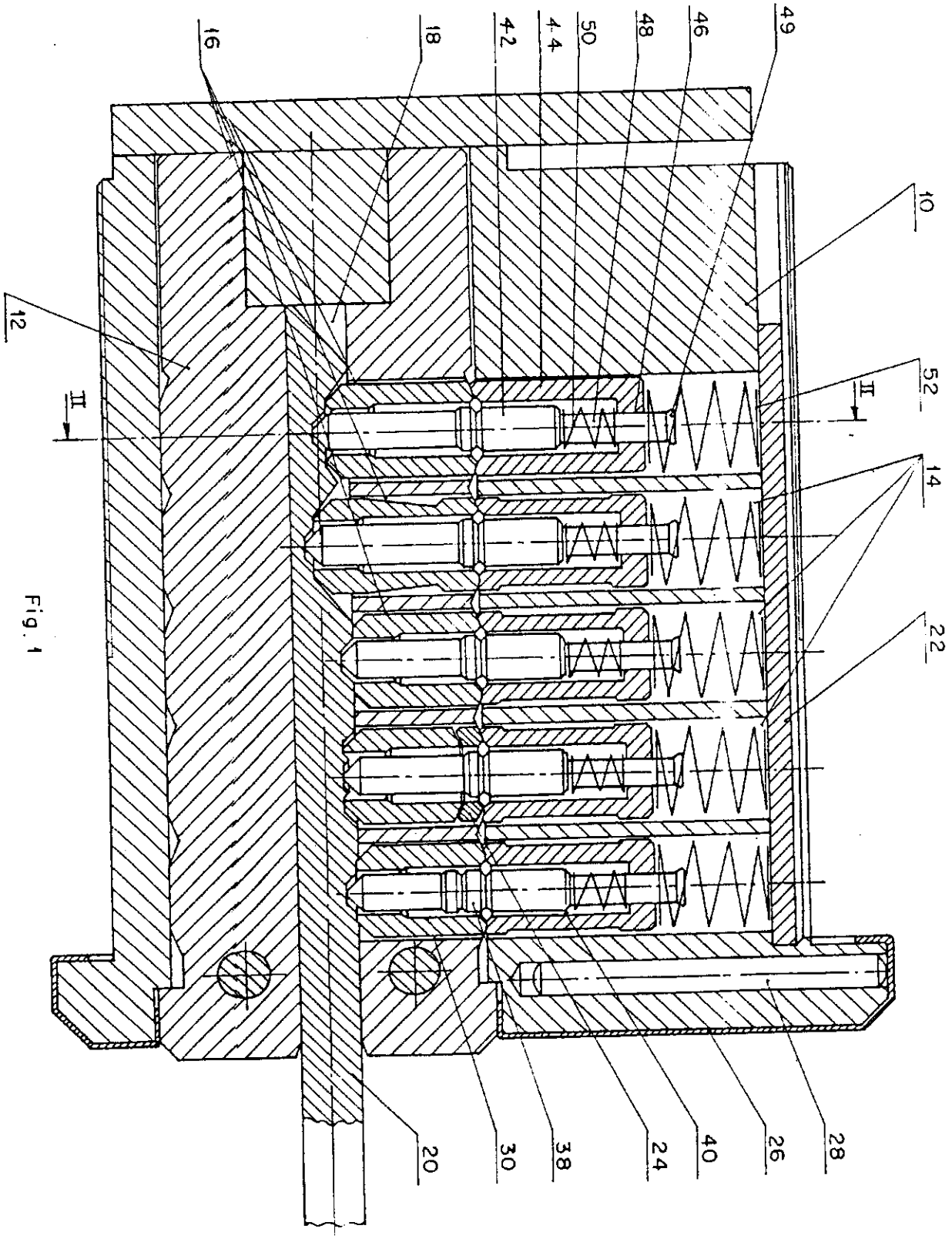

Fig. 1

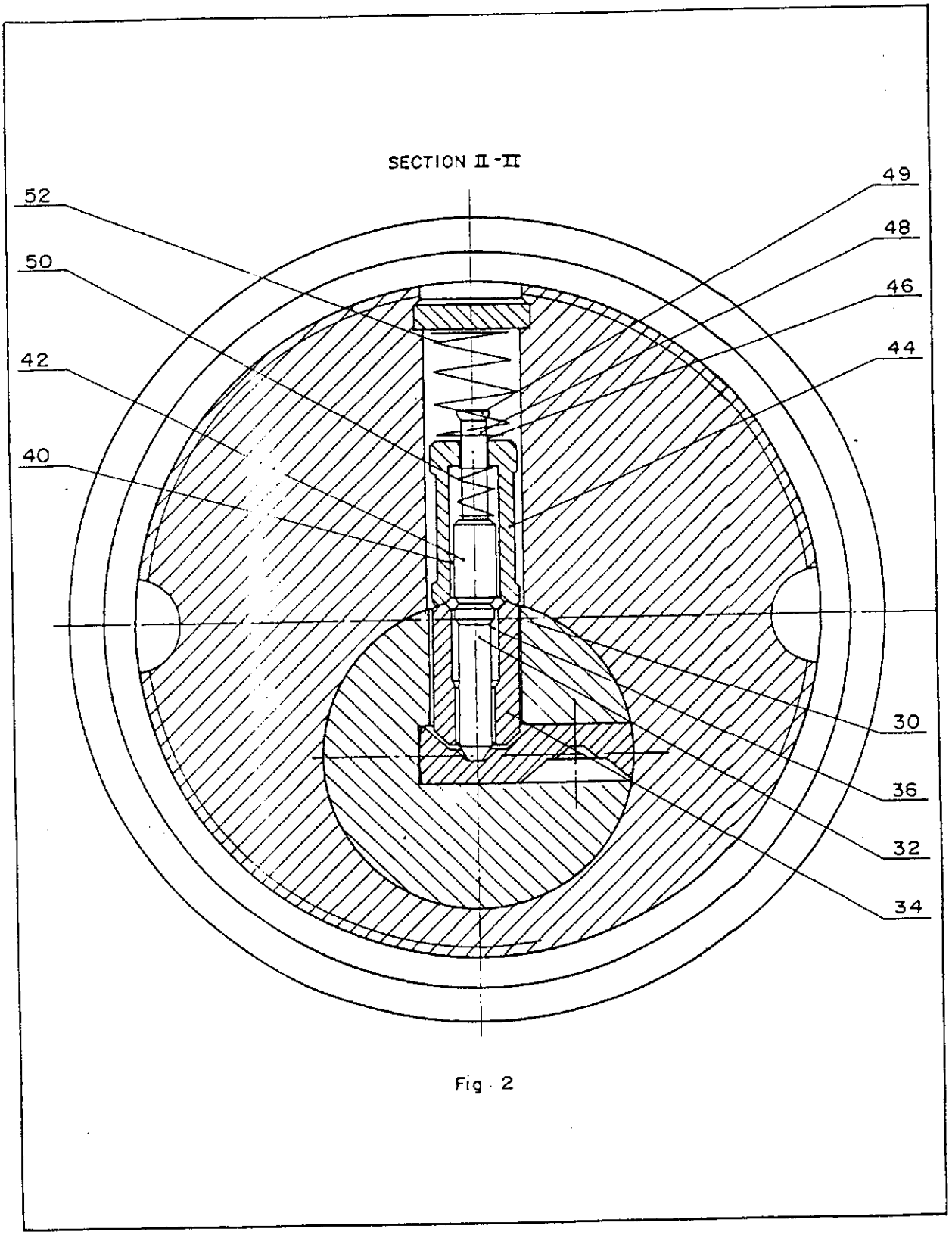

Fig. 2

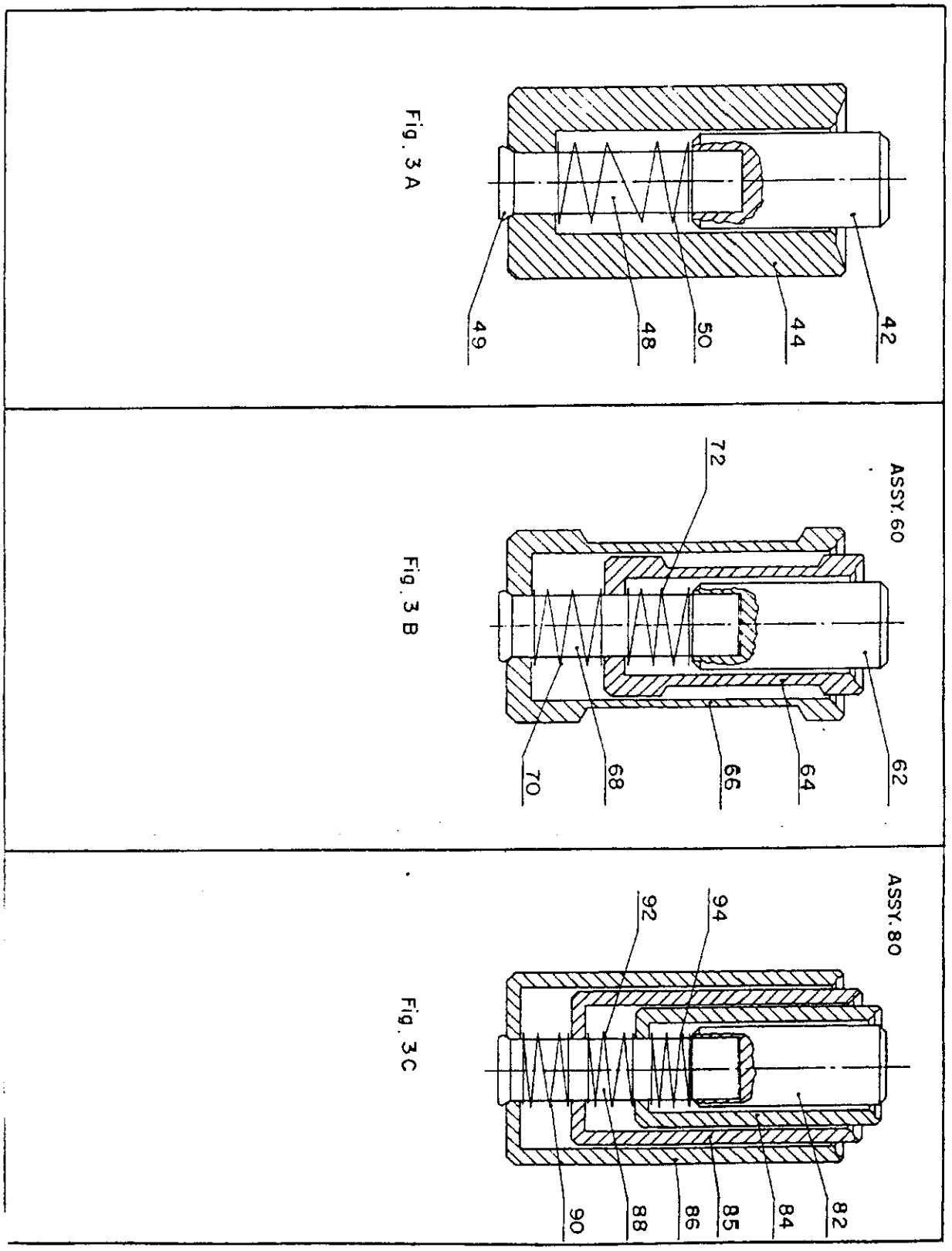
Fig. 3A
49
48
50
44
42
Fig. 3B
ASSY. 60
72
70
68
66
64
62
Fig. 3C
ASSY. 80
92
94
90
88
86
85
84
82

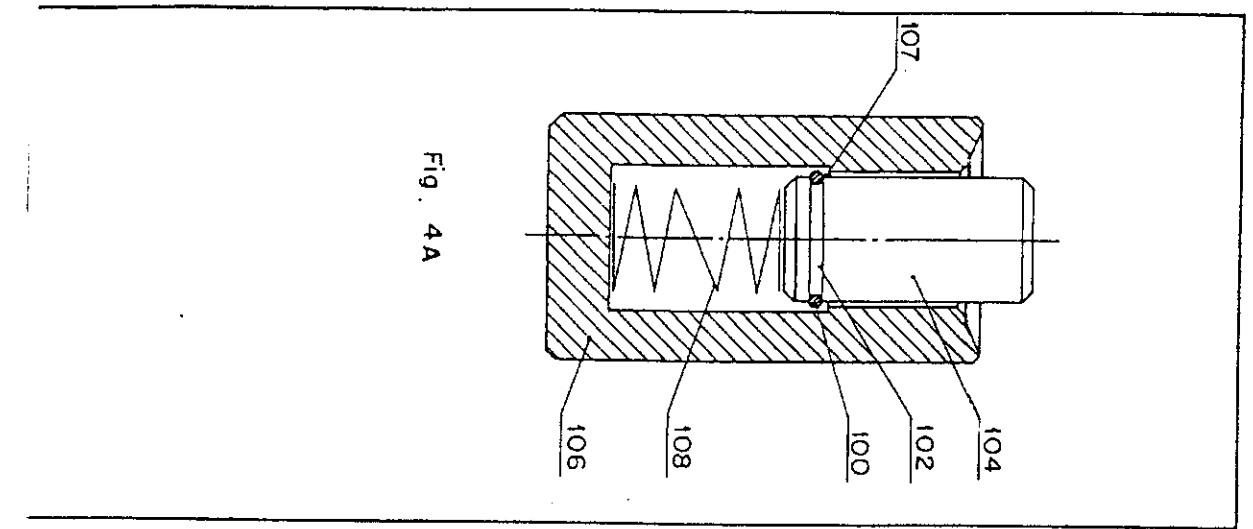

Fig. 4A

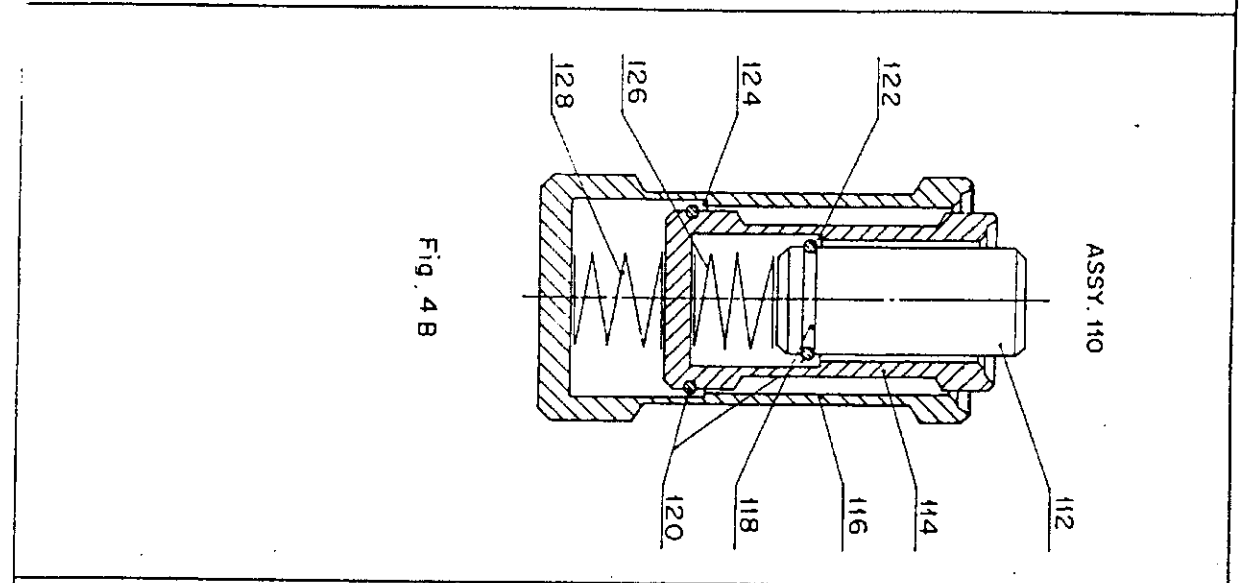

Fig. 4B

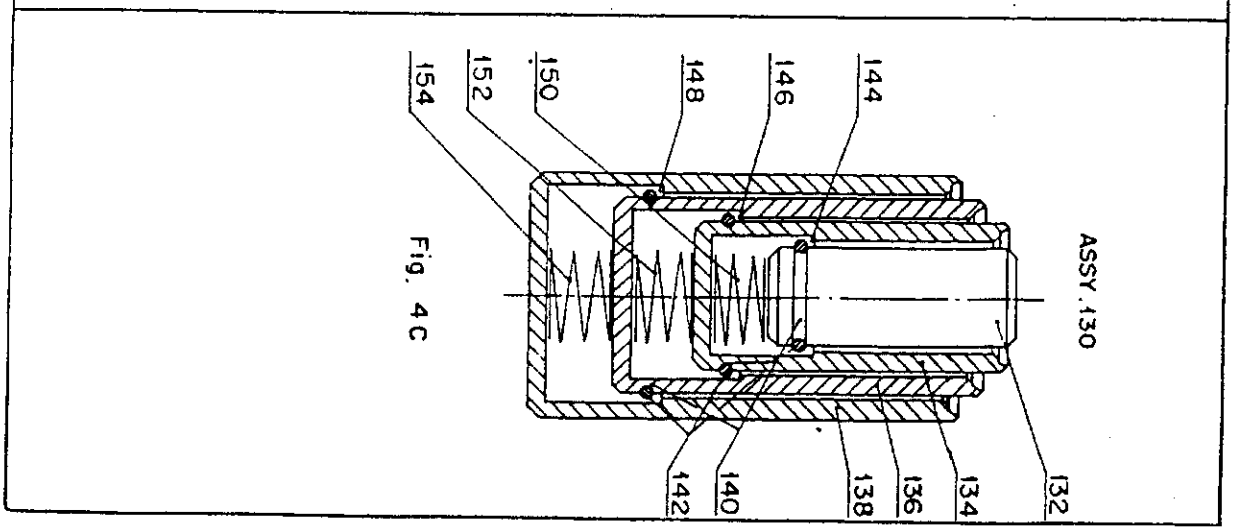

Fig. 4C

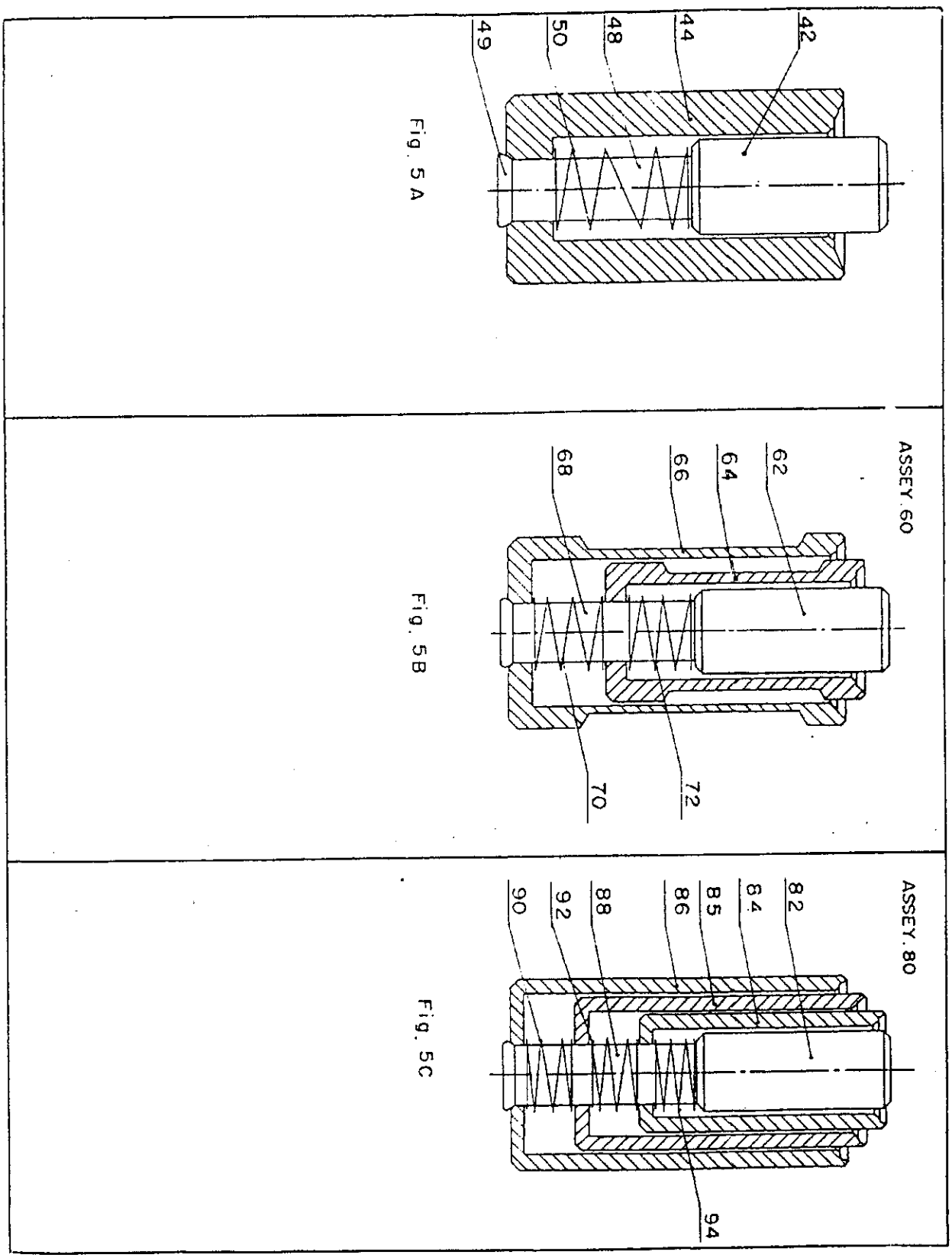
49
50
48
44
42
Fig. 5A
ASSEY. 60
68
66
64
62
70
72
Fig. 5B
ASSEY. 80
90
92
88
86
85
84
82
94
Fig. 5C

REGISTER ENTRY FOR EP0396492

European Application No EP90630030.6 filing date 01.02.1990

Priority claimed:
05.05.1989 in Israel - doc: 90211

Designated States BE CH DE DK ES FR GB GR IT LI LU NL SE AT

Title CYLINDER LOCK.

Applicant/Proprietor
MUL-T-LOCK LTD., Southern Industrial Zone, POB 465, Yavne 70 653, Israel
[ADP No. 50515519002]

Inventor
NOACH EIZEN, 34 Ben Gurion Street, Rishon Lezion, Israel
[ADP No. 57973372001]

Classified to
E05B

Address for Service
MCNEIGHT & LAWRENCE, Regent House, Heaton Lane, STOCKPORT, Cheshire, SK4 1BS, United Kingdom
[ADP No. 00001115001]

EPO Representative
ROBERT WEYDERT, OFFICE DENNEMEYER S.à.r.l. P.O. Box 1502, L-1015 Luxembourg, Luxembourg
[ADP No. 50374016001]

Publication No EP0396492 dated 07.11.1990
Publication in English

Examination requested 06.06.1991

Patent Granted with effect from 19.01.1994 (Section 25(1)) with title CYLINDER LOCK.

19.11.1990 EPO: Search report published on 19.12.1990
Entry Type 25.11 Staff ID. RD06 Auth ID. EPT

11.03.1994 EPO application/specification rectified (partial reprint) on 13.04.1994
Entry Type 25.20 Staff ID. RD06 Auth ID. EPT

**** END OF REGISTER ENTRY ****

RENEWAL DETAILS

PUBLICATION NUMBER EP0396492

PROPRIETOR(S)

MUL-T-LOCK LTD., Southern Industrial Zone, POB 465, Yavne 70 653, Israel

DATE FILED 01.02.1990

DATE GRANTED 19.01.1994

DATE NEXT RENEWAL DUE 01.02.1996

DATE NOT IN FORCE

DATE OF LAST RENEWAL 16.01.1995

YEAR OF LAST RENEWAL 06

STATUS PATENT IN FORCE

**** END OF REPORT ****