Sept. 15, 1959 J. B. RICKETTS, JR 2,904,726

THRYATRON ACTUATED PAWL CIRCUIT

Filed March 4, 1955

FIG. 1

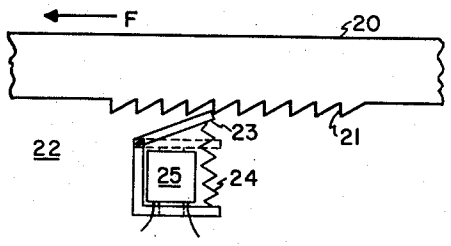

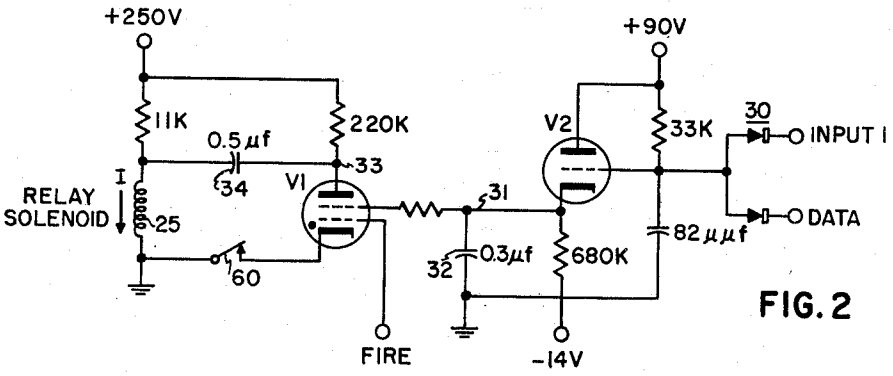

FIG. 2

FIG. 3

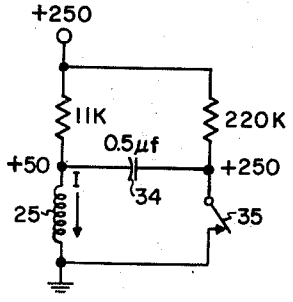

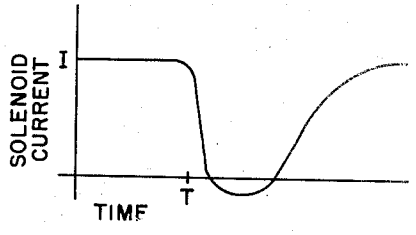

FIG. 4

INVENTOR.
JAMES B. RICKETTS JR

BY
Charles F. Carroll, Jr

ATTORNEY

United States Patent Office 2,904,726
Patented Sept. 15, 1959

2,904,726

THYRATRON ACTUATED PAWL CIRCUIT

James B. Ricketts, Jr., Bryn Mawr, Pa., assignor to Burroughs Corporation, Detroit, Mich., a corporation of Michigan

Application March 4, 1955, Serial No. 492,060

4 Claims. (Cl. 317—123)

This invention relates to a method of and means for reading out numbers from computers and is more particularly concerned with an improved method of and means for stopping a print bar of a printing machine at a position representative of the number to be printed.

In the system with which this invention is concerned, a high speed electronic computer tells a printer when each number is coming up. The printer then senses each digit position to see which digit coincides with the stated number. The print bar position which corresponds to the coincident digit position is then stopped or selected at the right time with a solenoid actuated pawl. Accurate timing and fast operation for this procedure is critical. It is so critical that conventional solenoid actuation and release time for a pawl are not reliable.

An object of this invention is to provide an improved high speed solenoid operated device and method.

A more specific object is to provide solenoid actuation and release means using a thyratron which provides high speed functioning of pawls associated therewith.

In accordance with one feature of this invention a thyratron is connected into circuitry to drive a solenoid actuated pawl associated with each rack. Thyratrons which correspond to a coincident digit position are readied to fire by computer signals and then are fired synchronously at the time the pawl is to stop a particular rack from printer timing signals. The thyratron is connected in this invention to deenergize the solenoid when such stopping action is required, and provides for eliminating residual magnetism which inhibits fast operation.

In describing this invention in detail, reference will be made to the attached drawings wherein:

Fig. 1 illustrates mechanical details of a rack stop solenoid actuated in accordance with the invention;

Fig. 2 illustrates the thyratron circuitry coupled to actuate the rack stop pawl;

Fig. 3 illustrates an equivalent circuit for the thyratron and solenoid of Fig. 2; and

Fig. 4 is a graph of current in the solenoid upon firing the associated thyratron.

As shown in Fig. 1, rack **20** is provided with a stop or indent **21** for each position in which rack **20** is to be held against force F tending to move it to the left as shown. Solenoid and pawl assembly **22** has clapper **23** positioned to abut against a selected stop **21**. Clapper **23** is urged in the direction of abutment by pressure from compressed spring **24**. In an initial position solenoid **25** is energized, and pawl or clapper **23** is pulled down to be clear of stops **21**. This energized position is the normal position of clapper **23**. To stop the rack at a desired position, solenoid **25** is deenergized at the proper instant, allowing spring **24** to push clapper **23** into engagement with stop **21**.

Fig. 2 shows a thyratron **V1** connected to deenergize solenoid **25** when the thyratron is fired. The firing is accomplished in two steps. A digit coincidence from computer signals is sensed by "and" circuit **30**, driving the cathode follower tube **V2** to high current. This current raises the potential on the shield or No. 2 grid of

thyratron **V1** from about —7 volts to slightly positive. Since it is desirable to trigger the thyratron from standard computer signals, capacitor **32** functions as part of an integrating circuit, holding lead **31** above ground potential for several milliseconds to permit functioning with trigger pulses of short duration. A further trigger input pulse is applied from the printer to grid No. 1 of thyratron **V1** through the "Fire" terminal. Since this pulse is derived from a slower speed mechanical printer, it is of long enough duration to reliably trigger the thyratron. With grid No. 2 above —2 volts, a +5 volt pulse on grid No. 1 will trigger thyratron **V1**, and thus the thyratron itself serves as a logical "and" circuit for obtaining coincident timing.

When tube **V1** fires, point **33** which has been at about +250 volts suddenly drops to about +10 volts. A strong negative pulse then passes through capacitor **34** to pawl-actuating solenoid **25**. This causes the current I initially flowing through the solenoid to decay rapidly, as shown in Fig. 4. When capacitor **34** is large enough, current I goes completely through zero and reverses. This negative current cancels the residual magnetism and allows clapper **23** to accelerate at the maximum capability of the pressure from spring **24**. Thus much faster operation is possible by the combined features of releasing the clapper and cancelling the residual magnestim, so that operation of a high speed printer is possible.

Fig. 3 shows an equivalent circuit for the thyratron **V1** and the associated solenoid circuit. When tube **V1** fires, it is equivalent to switch **35** closing. This shunts solenoid **25** with charged capacitor **34** which pushes current through the solenoid in a direction opposite to current I from the +250 volt supply. With values as shown in Fig. 3, a negative current flows through solenoid **25** for a short period. Once pawl or clapper **23** engages stop **21**, it will remain engaged until reset, even though current slowly returns to I, as shown in Fig. 4.

With the 220 K resistor in the thyratron anode circuit, the capacitor **34** coupling the solenoid to the thyratron anode holds the anode below 100 volts during the time the tube deionizes after breaking the cathode circuit with the normally closed switch **60**. This feature eliminates cathode-filament breakdown and permits the thyratron filaments to be coupled with other tubes.

In this manner, a thyratron actuates a relay by momentary deenergization and removal of residual magnetism, to provide high speed movement of clapper **23** to stop rack **20**.

In the circuits of Figs. 2 and 3, the value of capacitor **34** in microfarads is chosen so that the electrostatic energy stored in capacitor **34** before thyratron **V1** fires or switch **35** closes, is slightly greater than the electromagnetic energy stored in the magnetic field produced by current I through solenoid **25**. Thus when tube **V1** fires or switch **35** closes and capacitor **34** is effectively shunted across solenoid **25**, deenergization of solenoid **25** occurs very rapidly because opposite and nearly equal energies are combining. The slight excess of energy in capacitor **34** drives a small reverse current through solenoid **25**, removing residual magnetism.

Other embodiments of this invention will be evident from this illustrative description. The features of novelty provided by the invention are defined with particularity in the following claims:

What is claimed is:

1. A pawl actuation circuit comprising a voltage supply, a relay solenoid connected to said supply to store energy received therefrom, a capacitor connected to said solenoid and connected by an impedance element to said supply to store energy received therefrom, a gaseous discharge tube interconnecting said capacitor and said solenoid and effective upon firing to transfer the energy stored

in said capacitor to deenergize said solenoid, and input means connected to said gaseous discharge tube responsive to a plurality of signals to fire said tube.

2. A pawl actuation circuit comprising a source of electrical energy, a pawl actuating solenoid, a capacitor one plate of which is connected to said solenoid, separate resistance means connecting said source across said solenoid and across said capacitor and said solenoid in series to store energy therein, and a two grid gaseous discharge tube connected across said solenoid and said capacitor and effective upon firing to utilize the stored energy for rapid actuation of the pawl by said solenoid, said tube having a first input circuit responsive to coincident signals to prepare said tube for firing by raising one grid from low to high potential and having a second input circuit at the other grid responsive to a firing signal to fire said tube in the presence of the high potential at the first said grid.

3. Apparatus for rapid actuation of a pawl, comprising, a solenoid; a voltage supply; conductive means for connecting said voltage supply to said solenoid to pass current therethrough; a capacitor having one plate connected to said solenoid; impedance means connecting the other plate of said capacitor to said voltage supply to charge said capacitor by current flow through said impedance and said solenoid; a gaseous discharge tube having an anode, cathode, and a plurality of grid electrodes; means connecting said voltage supply to the anode-cathode electrodes of said tube; means for applying a plurality of signals to said grid electrodes of said tube to

fire aid tube in response thereto and thereby to discharge said capacitor through said solenoid.

4. A circuit for operating a relay solenoid comprising in combination, a source of energy connected for normally passing current through the solenoid including an impedance element connected between the solenoid and the source of energy, a capacitor coupled to said solenoid and having one plate connected to said source of energy for charging said capacitor, a thyratron having an anode, cathode and switching electrodes for selectively shunting said capacitor across said solenoid to discharge said capacitor thereby to reverse the current in said solenoid, an impedance device to couple the thyratron anode to said energy source, and a switch to couple the cathode to effect deionization whereby the impedance device prevents cathode-filament breakdown upon deionization.

References Cited in the file of this patent

UNITED STATES PATENTS

632,932	Williamson	Sept. 12, 1899
1,215,242	Bopp	Feb. 6, 1917
1,663,539	Bellinger	Mar. 27, 1928
1,939,071	Long	Dec. 12, 1933
1,979,054	Scheer	Oct. 30, 1934
2,082,123	Samuel	June 1, 1937
2,347,714	Sorensen	May 2, 1944
2,508,198	Sonnemann	May 16, 1950
2,627,945	Hooker	Feb. 10, 1953
2,764,715	Lorenz	Sept. 25, 1956