United States Patent

Schneider

[15] **3,635,290**

[45] **Jan. 18, 1972**

[54] APPARATUS FOR FIGHTING FOREST FIRES

[72] Inventor: **James L. Schneider,** 223 W. Wilshire Ave., Fullerton, Calif. 92632

[22] Filed: **Mar. 7, 1969**

[21] Appl. No.: **805,150**

[52] **U.S. Cl.** **169/1,** 169/2

[51] **Int. Cl.** **A62c 3/00**

[58] **Field of Search** ..... 169/1, 2; 47/26 X, 28.1; 239/2, 14; 89/36 N

[56] **References Cited**

UNITED STATES PATENTS

816,352	3/1906	Murphy	169/2
1,027,308	5/1912	Bishop	169/1
2,340,370	2/1944	Doyle	169/2
3,209,837	10/1965	Freedman	169/2
3,489,072	1/1970	Secor	239/2 X

FOREIGN PATENTS OR APPLICATIONS

538,395	11/1941	Great Britain	89/36 N
7,568	9/1899	Norway	169/1
15,685	8/1903	Great Britain	169/1
176,187	10/1965	U.S.S.R.	169/1

Primary Examiner—Lloyd L. King
Attorney—Hinderstein & Silber

[57] **ABSTRACT**

Apparatus for fighting forest fires in which a plurality of large sails are erected in the path of a forest fire thereby forming a shield which the fire cannot penetrate. The sails are erected using hot air balloons and the individual sails are constructed in such a manner that the heat and wind are trapped thereunder thereby helping keep the sails erect.

4 Claims, 2 Drawing Figures

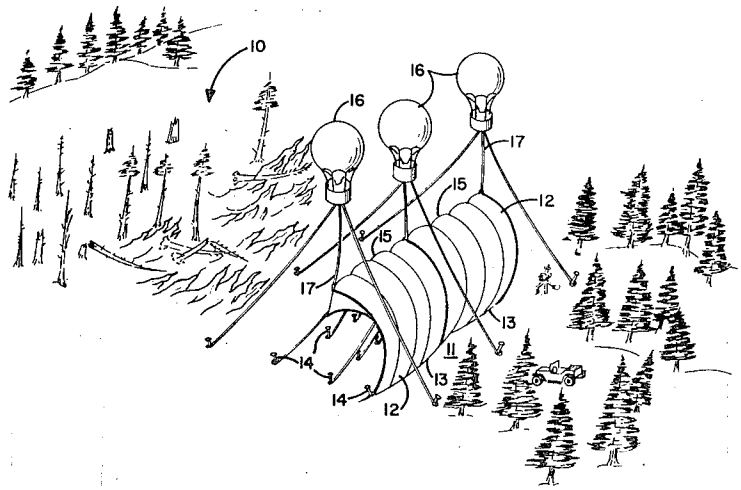

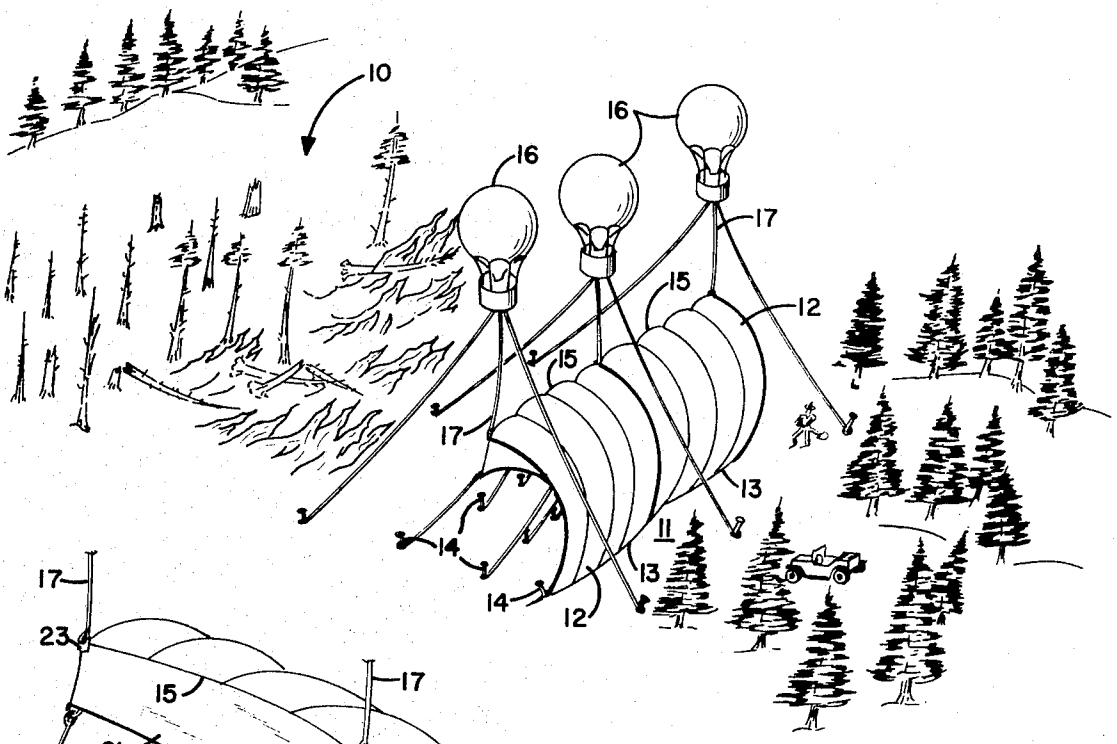

FIG. 1

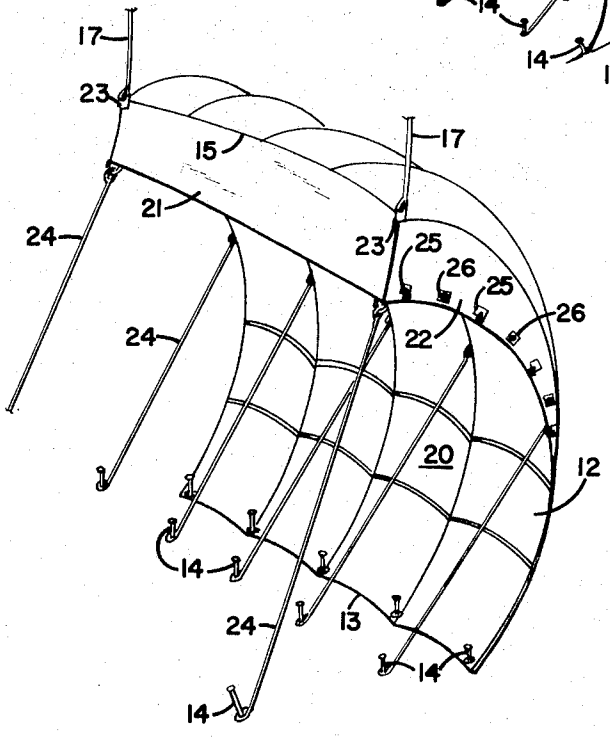

FIG. 2

INVENTOR.
JAMES L. SCHNEIDER
BY
Hinderstein & Silber
ATTORNEYS

APPARATUS FOR FIGHTING FOREST FIRES

BACKGROUND OF THE INVENTION

1. Field of the Invention

The present invention relates to means for fighting forest fires and, more particularly, to a fire-fighting method and apparatus wherein a plurality of sails are positioned in the path of the fire so as to create a shield which the fire cannot penetrate.

2. Description of the Prior Art

Every year millions of dollars worth of timber land, recreational facilities, homes and other natural resources are lost due to fire. Many of these fires take several days or even weeks to contain. Realizing that one way to stop the loss is to prevent the fires from occurring, great efforts are made and much time is spent in educating the public so that the fires will not occur. However, no matter how much care is taken, there is no way to stop forest fires from occurring.

Therefore, the next question is whether our present methods for fighting forest fires are adequate. Unfortunately, the answer seems to be clearly "no." When a fire breaks out in one of our forests, many crews of men are sent in to try and contain it, but they are not given effective tools in order to achieve their task. The men generally try to stop the fire by digging holes and grading roads and just plain hoping that the fire will not jump across the fireline. Fire retardant sprays and powders are also used but these generally are not effective in stopping the travel of the fire.

SUMMARY OF THE INVENTION

In accordance with the present invention there is provided novel means for fighting forest fires. The present invention will not stop forest fires from occurring but will give fire-fighting crews a tool with which to minimize the damage caused by the fire. The present fire-fighting apparatus is operative to provide a shield which the fire cannot penetrate. In this manner, the fire may be prevented from spreading and may be contained in a relatively small area. By containing the fire in a small area, fire retardant sprays or powders may be effectively used to put the fire out in the shortest possible period of time.

Briefly, the present invention comprises a plurality of sails having an awning at the upper end thereof, which sails are adapted to be erected in the path of the fire. The lower end of the sails are secured to the ground and the upper ends of the sails are elevated using hot air balloons. The heat and wind caused by the fire will be trapped under the awning to help keep the sails erect. With the sails in place, the fire-fighting crews are now in a position to bring the fire under control.

It is, therefore, an object of the present invention to provide novel apparatus for fighting forest fires.

It is a further object of the present invention to provide apparatus for fighting forest fires in which a plurality of sails are erected in the path of the fire.

It is a still further object of the present invention to provide apparatus for fighting forest fires in which a plurality of sails are supported in the path of the forest fire by a plurality of hot air balloons.

It is another object of the present invention to provide forest fire-fighting apparatus in which a plurality of aluminized, asbestos sails are erected in the path of the fire.

Still other objects, features and attendant advantages of the present invention will become apparent to those skilled in the art from a reading of the following detailed description of the preferred embodiment constructed in accordance therewith, taken in conjunction with the accompanying drawings wherein like numerals designate like parts in the several figures and wherein:

BRIEF DESCRIPTION OF THE DRAWINGS

FIG. 1 is a perspective view showing apparatus for fighting forest fires constructed in accordance with the teachings of the present invention;

FIG. 2 is a perspective view of one of the sails of FIG. 1.

DESCRIPTION OF THE PREFERRED EMBODIMENT

Referring now to the drawings and, more particularly, to FIG. 1 thereof, assume a fire is out of control in a forest, generally designated **10**, and that it is desired to take a stand and form a fireline in an area **11**. Either airplanes, helicopters, pack horses or trucks could deliver one or more sails **12** to area **11**. As will be explained more fully hereinafter, the lower end **13** of sails **12** are secured to the ground using stakes **14**. The upper end **15** of sails **12** may be elevated by using a plurality of hot air balloons **16** connected to ends **15** of sails **12** by wires **17**.

Referring now to FIG. **2**, sails **12** may have any one of many possible shapes and may be any size. According to a preferred embodiment, sails **12** may include a first generally rectangular section **20** which may be 150 feet wide and 150 feet high. Attached to edge **15** of sheet **20** is a second sheet **21**, whose purpose will be explained more fully hereinafter. An additional pair of sheets **22** may be attached to the end of sheet **21** and the sides of sheet **20**, as shown.

As shown in FIG. **2**, edge **13** of sail **12** is adapted to be secured to the ground by means of stakes **14**. In addition, upper end **15** of sail **12** includes a plurality of hooks **23** for connection to wires **17**. A plurality of guy wires **24** connected to sail **12** keep sail **12** in the desired shape.

With hot air balloons **16** connected to hooks **23** via cables **17**, balloons **16** are sent aloft. As balloons **16** rise, they will carry sail **12** with them thereby erecting sails **12** in the path of the fire. Sheets **21** and **22** form an awning which traps the heat and wind caused by the fire thereby helping keep sails **12** erect.

Sails **12** may be made of any fire-resistant material such as aluminized asbestos fabric. In addition, hot air balloons **16** may also be made of aluminized asbestos fabric. Guy wires **17** and **24** may be made of lightweight aluminum.

In the event that a single sail **12** does not cover a sufficient area to contain the fire, a plurality of sails may be connected together. For this purpose side sheets **22** may include a plurality of hooks **25** and a plurality of eyelets **26**, hooks **25** on one sail adapted to be connected to eyelets **26** on the next sail.

With sails **12** in place, the fire-fighting crews are now in a position to bring the fire under control. Sails **12** provide an effective shield which the fire cannot penetrate, thereby preventing the fire from spreading and containing it in a relatively small area. By containing the fire in a small area, fire retardant sprays or powders may be effectively used to put the fire out in the shortest possible period of time.

While the invention has been described with respect to a preferred physical embodiment constructed in accordance therewith, it will be apparent to those skilled in the art that various modifications and improvements may be made without departing from the scope and spirit of the invention.

I claim:

1. Apparatus for fighting forest fires comprising:
at least one, relatively large sail, said sail comprising:
a first generally rectangular section, the bottom edge of which is adapted to be secured to the ground;
an awning secured to the top edge and sides of said rectangular section, said awning trapping the heat and wind caused by said fire thereby keeping said sails erect; and
inflatable means for erecting said sail in the path of a fire.

2. Apparatus according to claim **1** wherein said inflatable means for erecting said sail comprises:
a plurality of hot air balloons; and
a plurality of cables connected between said top edge of said rectangular section and said balloons.

3. Apparatus according to claim **1** further comprising:
a plurality of said sails; and
means for connecting the sides of adjacent sails together.

4. Apparatus according to claim **3** wherein said means for connecting comprises:
a plurality of hooks and eyelets connected to the sides of said awnings, the hooks on one sail adapted to be secured to the eyelets on the adjacent sail.

* * * * *