June 27, 1950 R. V. HARROLD 2,513,021

COMBINATION SWING AND EXERCISING DEVICE

Filed Nov. 8, 1948

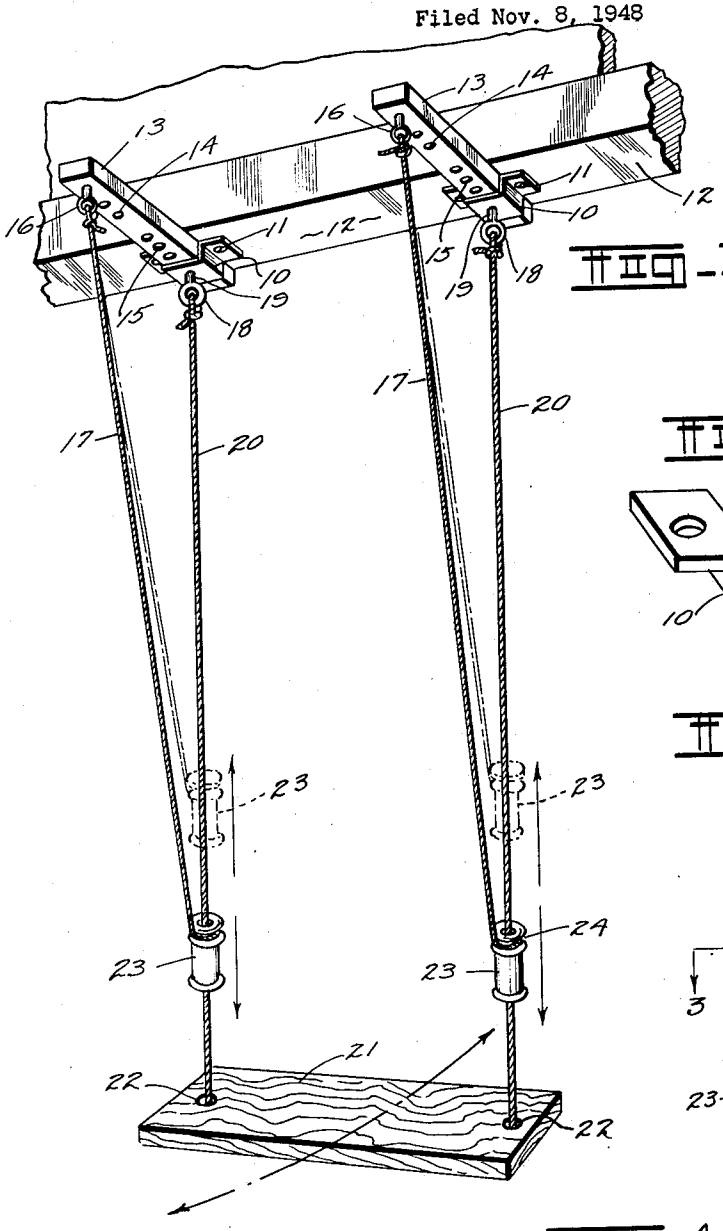

FIG. 1.

FIG. 2.

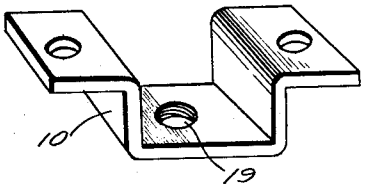

FIG. 3.

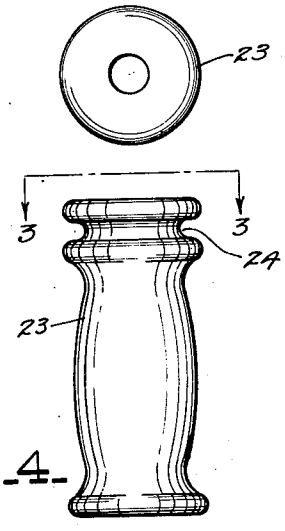

FIG. 4.

INVENTOR.
Roy V. Harrold.

BY W. B. Harpman
ATTORNEY.

Patented June 27, 1950 2,513,021

UNITED STATES PATENT OFFICE

2,513,021

COMBINATION SWING AND EXERCISING DEVICE

Roy V. Harrold, Columbiana, Ohio

Application November 8, 1948, Serial No. 58,867

4 Claims. (Cl. 155—65)

1

This invention relates to a combination swing and exercising device.

The principal object of the invention is the provision of a simple and inexpensive combination swing and exercising device.

A further object of the invention is the provision of a combination swing and exercising device having means for adjusting the same.

A still further object of the invention is the provision of a swing and exercising device having means for attachment to a supporting member.

A still further object of the invention is the provision of a combination swing and exercising device which will enable the arm and back muscles of a person using the same to be exercised in a controlled degree.

A still further object of the invention is the provision of a combination swing and exercising device which may be used as a child's swing.

The combination swing and exercising device herein comprises a simple and inexpensive device which may be readily secured to a supporting member such as an overhead beam, doorway casing or ceiling and usable both as a child's swing and as an exerciser for a child or adult. It is well known that swinging and particularly swinging motion when occasioned by shifting the relative position of a person's weight with respect to the swing provides beneficial exercise for various muscles of the body and that when such muscular activity can be achieved in addition to that of the arm and leg muscles, very nearly all of the muscles of the body benefit therefrom.

The combination swing and exercising device disclosed herein enables all of the muscles of the body to be used in a self-propelled swinging motion or, alternately, the arm muscles to be used, as desired. Additionally, the device is capable of use as a child's swing for amusement purposes.

With the foregoing and other objects in view which will appear as the description proceeds, the invention resides in the combination and arrangement of parts and in the details of construction hereinafter described and claimed, it being understood that changes in the precise embodiment of the invention herein disclosed can be made within the scope of what is claimed without departing from the spirit of the invention.

The invention is illustrated in the accompanying drawing, wherein:

Figure 1 is a perspective view of the combination swing and exercising device.

Figure 2 is an enlarged detail view of an element of the device shown in Figure 1.

2

Figure 3 is a top plan view of an element of the device shown in Figure 1.

Figure 4 is a side view of an element of the device shown in Figure 1.

By referring to the drawings and Figure 1 in particular it will be seen that a combination swing and exercising device has been disclosed and comprises a pair of support brackets 10—10 which are secured by suitable fasteners 11 to an overhead support 12. The overhead support 12 may obviously comprise a beam, a doorway casing or a ceiling or any other suitable horizontally disposed member. Each of the support brackets 10—10 is of semi-U-shaped construction (as shown in Figure 2 of the drawings) and is adapted to slidably receive and retain a pair of support arms 13—13. Each of the support arms has a plurality of vertically extending openings 14 located near its outermost end and a plurality of vertical openings 15 located near its innermost end. A pair of eye bolts 16 are positioned one in each of the arms 13 and in registry with one of the plurality of openings 14 and a pair of ropes 17 are secured to the eye bolts 16 and depend therefrom. A pair of secondary eye bolts 18, which may alternately be screws having eye heads, are positioned through openings 19—19 which are preferably drilled and tapped in the brackets 10—10 and the ends of a rope 20 are secured thereto, the rope 20 depending therefrom in a general U-shape.

A swing seat 21 having openings 22 therein is positioned on the rope 20 to form a seat with the lower portion of the rope 20 lying thereinunder. A pair of sleeve-like handles 23—23 are slidably positioned on the rope 20, one at each side and above the swing seat 21. Each of the sleeve-like handles 23—23 (as may be best seen in Figures 3 and 4) forms a member which may be conveniently grasped by the hand and also provides an annular channel 24 around which the lower end of one of the ropes 17 is secured, as best shown in Figure 1 of the drawings. It will thus be seen that the assembled device comprises a swing including the rope 20 and the swing seat 21 secured to the eye bolts 18 which are in turn secured to the brackets 10 and the arms 13—13.

It will be obvious to those skilled in the art that when a person is seated upon the swing seat 21 and grasps the sleeve-like handles 23—23, the swing may be propelled forwardly and backwardly, as shown by the arrows in Figure 1 of the drawings, by moving the sleeve-like handles vertically on the ropes 20. This action is occasioned by reason of the altering of the triangular shape

defined by the rope 20 and the ropes 17 and the arms 13. Alternately, the user may operate the device in the usual manner wherein shifting of the body weight causes the swing to move back and forth. In either event the degree of the exercise and the movement of the swing may be directly controlled by adjusting the positions of the arms 13 with respect to the brackets 10 as by loosening the eye bolts 18 and moving the arms 13 with respect thereto or alternately by re-positioning the eye bolts 16 in any one of the plurality of openings 14 provided. Thus, the desired degree of exercise and motion imparted the combination swing and exercising device may be directly controlled by the simple dual adjustments provided and the degree of effort required to operate the swing varied by such adjustment to directly control the amount of exercise desired.

It will thus be seen that a simple and efficient combination swing and exercising device has been disclosed which may be simply and inexpensively formed and which provides means for beneficial exercising action chiefly by reason of its features of adjustment which make possible variation of the action obtained.

It will thus be seen that the combination swing and exercising device meets the several objects of the invention.

Having thus described my invention, what I claim is:

1. A combination swing and exercising device comprising in combination a pair of support brackets and a pair of support arms adjustably positioned in the said support brackets, a rope swing suspended from the said brackets and tubular members engaged on the ropes of the said swing, and secondary ropes connecting the said tubular members to the outermost ends of the said arms.

2. A combination swing and exercising device comprising in combination a pair of brackets for attachment to an overhead support member, a pair of eye bolts threadably engaged in the said brackets, a pair of flexible support members connected at their upper ends to the said eye bolts and a swing seat carried by said flexible support

members, a pair of tubular handles positioned on the said flexible support members, one on each thereof, and above the said swing seat and a pair of arms adjustably positioned in the said support brackets and extending outwardly therefrom, and a pair of flexible members connecting the outermost ends of the said arms with the said tubular handles.

3. In a swing and exercising device including support members and a swing suspended therefrom; a pair of arms adjustably positioned in the said support members and extending outwardly therefrom, movable members engaging the said swing and flexible members connecting the outermost ends of the said arms with the said movable members whereby said swing may be propelled by a person seated thereon and moving the said movable members vertically.

4. In a swing and exercising device, means for engaging an overhead support member, flexible support members attached to said means and suspended therefrom, a swing seat carried on said flexible support members and a pair of tubular members positioned on the said flexible support members and above the said seat, a pair of arms movably secured to the said support means and a pair of secondary flexible support members adjustably secured one to each of the said arms and to the said tubular members whereby a person seated on the said swing seat may move the swing seat by downward motion imparted to the tubular members and whereby the degree of energy necessary for such movement may be varied by the effective length of the said arm.

ROY V. HARROLD.

REFERENCES CITED

The following references are of record in the file of this patent:

UNITED STATES PATENTS

Number	Name	Date
82,998	Seaver	Oct. 13, 1868
1,490,619	Manikowske	Apr. 15, 1924
2,122,603	Bentz	July 5, 1938