No. 780,980. PATENTED JAN. 31, 1905.

A. D. CRESSLER.

NON-REFILLABLE BOTTLE.

APPLICATION FILED JUNE 25, 1903.

Fig. 1.

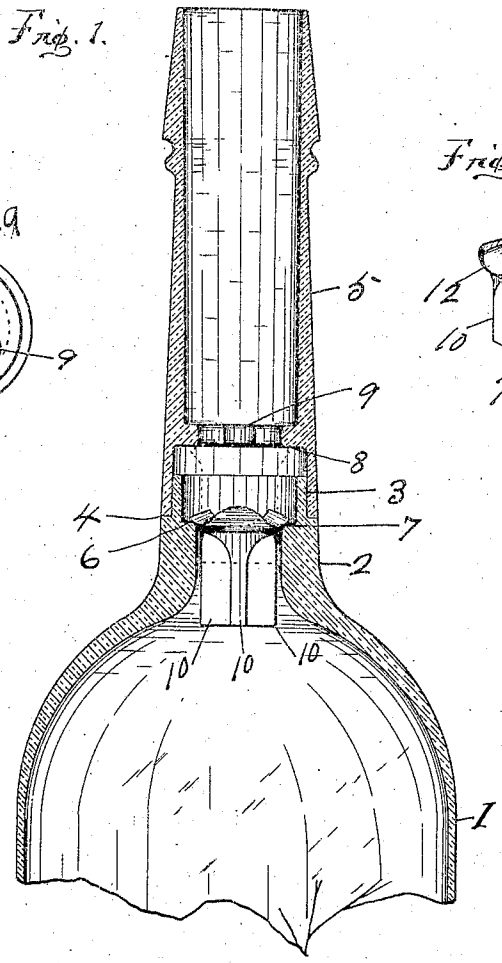

Fig. 2.

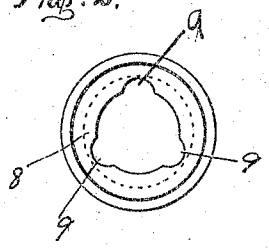

Fig. 3.

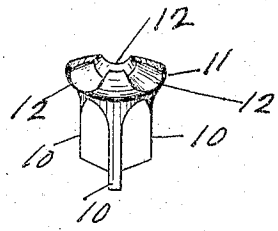

Fig. 4.

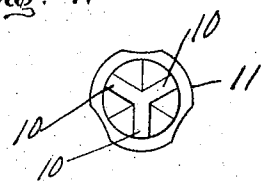

Fig. 5.

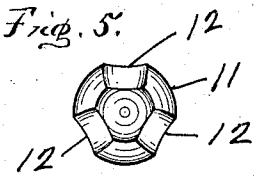

WITNESSES:

W. J. Burns

Luke E. Bulmahn

Alfred D. Cressler INVENTOR

BY Chapin & Denny

HIS ATTORNEYS.

PHOTO-LITHOGRAPHED BY SACHETT & WILHELMS LITHO. & PTG. CO. NEW YORK.

No. 780,980. Patented January 31, 1905.

UNITED STATES PATENT OFFICE.

ALFRED D. CRESSLER, OF FORT WAYNE, INDIANA.

NON-REFILLABLE BOTTLE.

SPECIFICATION forming part of Letters Patent No. 780,980, dated January 31, 1905.

Application filed June 25, 1903. Serial No. 163,008.

To all whom it may concern:

Be it known that I, ALFRED D. CRESSLER, a citizen of the United States, residing at Fort Wayne, in the county of Allen, in the State of Indiana, have invented certain new and useful Improvements in Non-Refillable Bottles; and I do hereby declare that the following is a full, clear, and exact description of the invention, which will enable others skilled in the art to which it appertains to make and use the same, reference being had to the accompanying drawings, which form part of this specification.

My invention relates to improvements in non-refillable bottles.

The object of my present invention is to provide an improved non-refillable bottle of simple and economical construction so arranged that when emptied of its contents the means for normally closing the same cannot be tampered with by a wire or other means for the purpose of refilling.

My invention consists of a glass bottle, or made of other suitable material, of proper dimensions, having the upper portion of its neck removable before filling, but firmly adherent thereto after filling, and having its neck provided with an annular chamber containing a closing plug or valve loosely mounted therein and normally resting upon an annular seat in said chamber when the bottle is closed, but adapted to seat itself by gravity upon an upper annular seat of special construction when the bottle is inverted, whereby the contents of the bottle can readily be discharged therefrom as desired without removing the valve.

The principal novel feature of my invention resides in the construction of the valve and upper valve-seat, whereby the valve cannot be held open by means of a wire or other device to refill the bottle.

Referring to the accompanying drawings, in which similar reference-numerals indicate like parts in the several views, Figure 1 is a vertical central section of the neck and upper portion of the bottle, broken away in part, showing the valve in its normal position upon its lower seat and showing in dotted outline the relative position of the valve upon its upper seat when the bottle is inverted. Fig. 2 is a bottom plan of the neck, showing the flanged upper seat for the valve and also showing the openings therein through which the contents can be discharged when the valve is seated thereon. Fig. 3 is a perspective detail of the valve, showing the radial recesses through which the contents discharge when resting upon its upper seat. Fig. 4 is a bottom plan of the valve, and Fig. 5 is a top plan of the same.

My improved non-refillable bottle is made of glass in two parts, the body portion 1 of which, of common form and any proper dimensions, is provided with a short, thickened, and contracted extension 2, having an annular upright flange 3, an outer annular shoulder or seat 4 for the neck 5 presently to be described, and an inner annular shoulder 6, upon which the valve 7 is normally and loosely seated by gravity.

The neck 5 has its lower end adapted to fit snugly over the flange 3 and rests upon the seat 4 and is provided near its lower end with an inner annular guard-shoulder 8, which is provided upon its inner edge with a plurality of recesses 9, through which the contents can readily discharge when the valve 6 is seated upon the shoulder 8, as shown in dotted outline in Fig. 1.

The valve has its lower portion formed of a plurality of radial guiding-wings 10, loosely arranged in the contracted circular opening in the upper end of the body portion 1. The upper end of this valve consists of an enlarged circular head 11, having its lower edge slightly beveled and adapted to normally rest upon a corresponding beveled seat on the adjacent edge of the shoulder 6. This head 11 is provided upon its upper face with a plurality of outwardly-inclined recesses 12, adapted to permit the discharge of the contents of the bottle when the valve is seated by gravity upon the shoulder 8.

The manner of using my invention thus described is obvious and, briefly stated, is as follows: The body 1 of the bottle, which is preferably of glass, is first filled with the liquid through the opening in the extension 2. The valve 7 is then seated, as described, in said opening, where it will normally retain its position

by gravity. The neck 5, which is properly heated to firmly adhere to the upright flange 3, is then placed in position and the upper end thereof is properly corked or sealed. When it is desired to empty the bottle, the cork is drawn and the bottle tipped up in the usual manner, thereby shifting the valve 7 from its normal position to the guard-shoulder 8, on which it rests and in which position the contents can readily escape through the recesses 12 of the valve and the openings 9 of the annular guard-shoulder 8. As soon as the bottle is placed in its proper position the valve 7 will automatically resume its normal position upon its lower seat 6 thereby completely closing the opening to the body of the bottle.

The wings 10 of the valve 7 are of sufficient length to have their lower ends remaining within the opening of the said extension 2 when the valve rests on the annular guard-shoulder 8, thereby securely guiding the valve in its return to its normal position.

As the valve 7 resumes its lower seat by gravity, and thereby completely closes the opening to the body of the bottle, it is obvious that refilling of the bottle is impossible.

It is also evident that as the top of the valve 7 is larger than the opening within the annular guard-shoulder 8 and the top of the valve is beveled, as shown, it cannot be tampered with by means of a wire or other like device.

Having thus described my invention, what I desire to secure by Letters Patent is—

In a non-refillable bottle, the combination of a body portion having a contracted upper extension provided with an inner annular valve-seat, a neck portion adapted to be secured upon said extension and provided within its inner end with a recessed annular guard-shoulder, and a gravity-valve adapted to be reciprocated in the chamber formed between the inner annular valve-seat and the recessed annular guard-shoulder, said valve having an enlarged circular head beveled on its lower edge and also having its upper face formed with a plurality of outwardly-inclined recesses, the lower beveled edge of the circular head normally resting on the inner annular valve-seat.

Signed by me at Fort Wayne, Allen county, State of Indiana, this 20th day of June, 1903.

ALFRED D. CRESSLER.

Witnesses:
LULU E. BULMAHN,
ETHEL M. COOKE.