E. N. HOGUE.

VACUUM LIFT.

APPLICATION FILED DEC. 6, 1916.

1,261,026.

Patented Apr. 2, 1918.

2 SHEETS—SHEET 1.

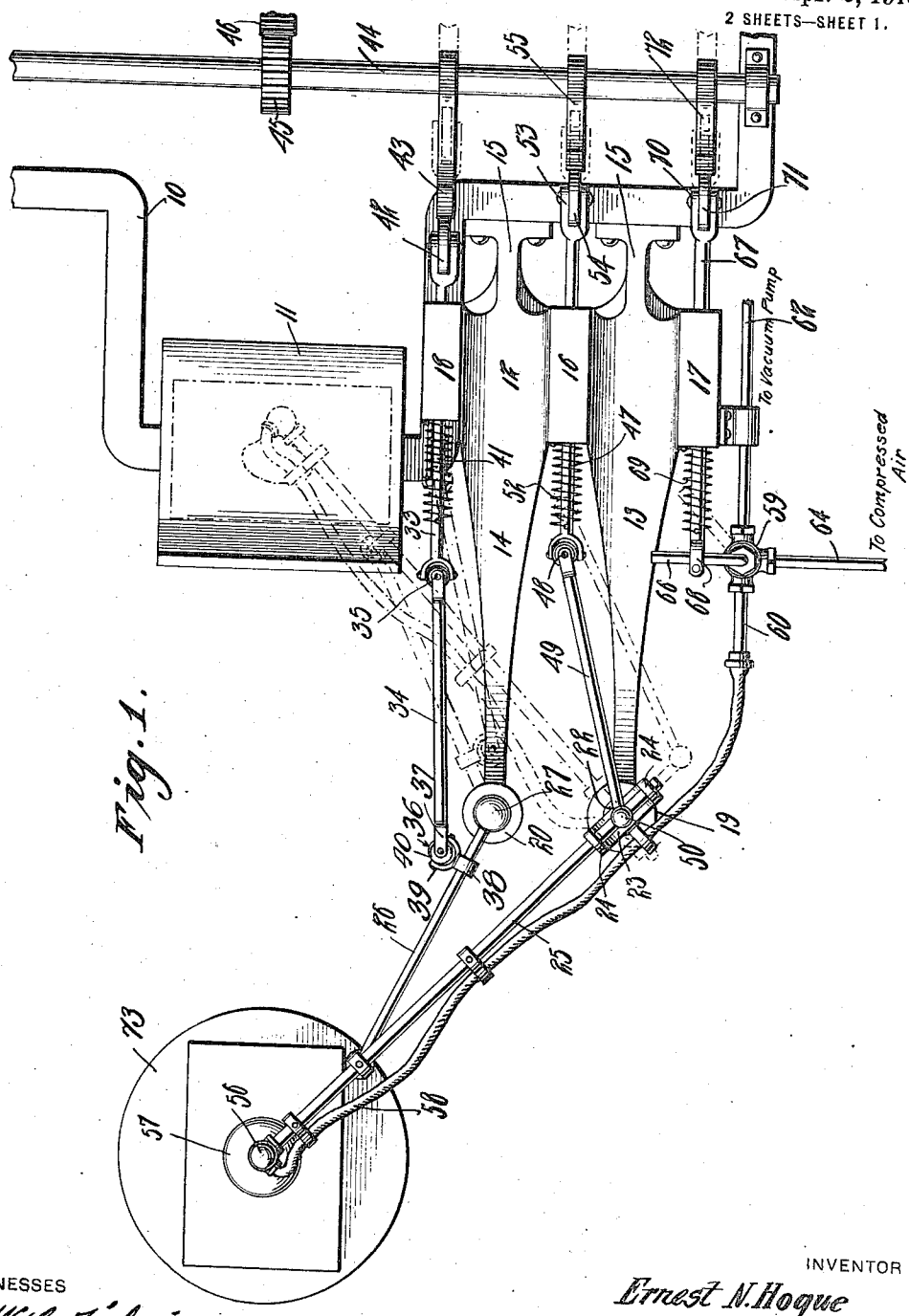

Fig. 1.

WITNESSES

W. C. Fielding

Wm Zeamans

INVENTOR

Ernest N. Hogue

BY Richard B. Owen.

ATTORNEY

SACKETT & WILHELMS CORP. N.Y.

E. N. HOGUE.

VACUUM LIFT.

APPLICATION FILED DEC. 6, 1916.

1,261,026.

Patented Apr. 2, 1918.

2 SHEETS—SHEET 2.

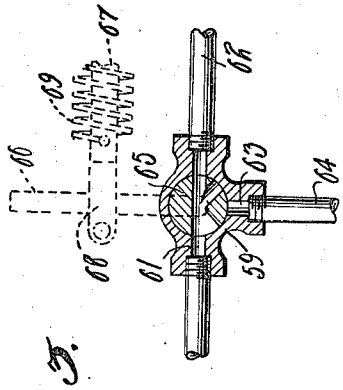

Fig. 5.

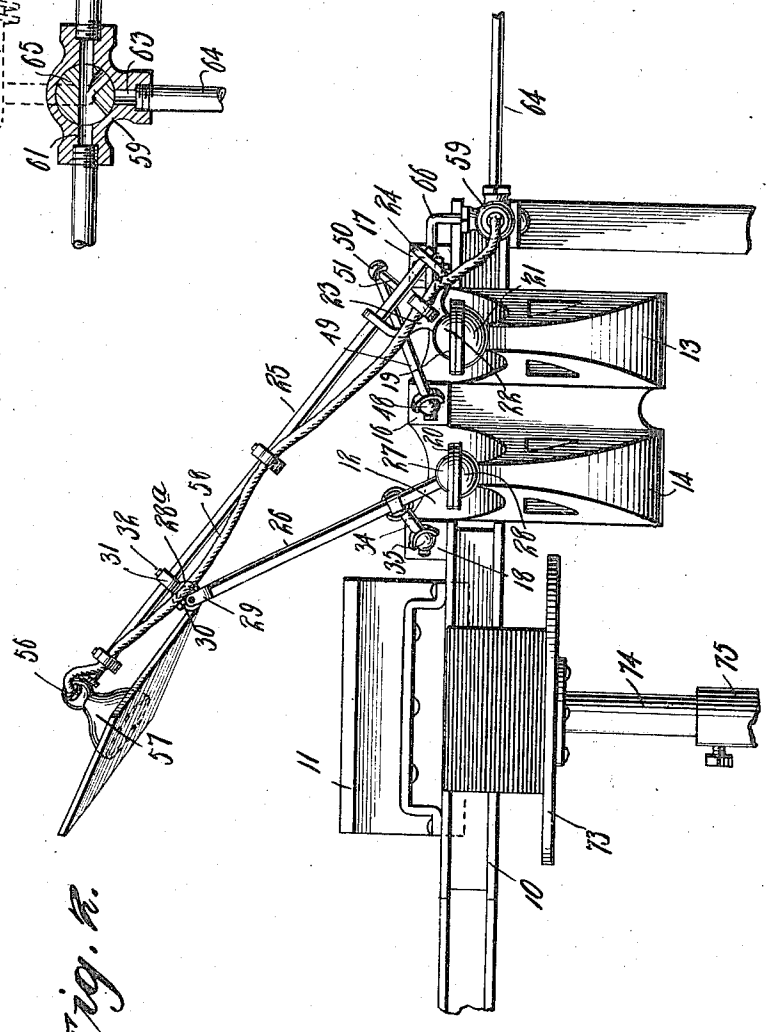

Fig. 2.

WITNESSES

W. C. Fielding

Wm. Graham

INVENTOR

Ernest N. Hogue

BY Richard B. Owen

ATTORNEY

UNITED STATES PATENT OFFICE.

ERNEST N. HOGUE, OF WILKINSBURG, PENNSYLVANIA.

VACUUM-LIFT.

1,261,026. Specification of Letters Patent. Patented Apr. 2, 1918.

Application filed December 6, 1916. Serial No. 135,409.

To all whom it may concern:

Be it known that I, ERNEST N. HOGUE, a citizen of the United States, residing at Wilkinsburg, in the county of Allegheny and State of Pennsylvania, have invented certain new and useful Improvements in Vacuum-Lifts, of which the following is a specification.

This invention has relation to conveying machinery, and has for its object to provide an apparatus for transferring objects or material such as laminations of paper, metal or the like, from one location to another by elevating the objects through the medium of a vacuum element, accomplishing the transfer of the objects while supported by the element, and subsequently releasing the object by discontinuing the vacuum when the object has reached its destination.

Another object of the invention is to provide an apparatus of simple construction for supporting the aforesaid vacuum element, and for moving the same, whereby the transferal of the objects from one location to another may be readily accomplished.

A still further object of the invention is to provide a specific adaptation of the principles set forth above in the form of mechanism adapted for association with and actuation by a job printing press, or the like, whereby a sheet of paper may be elevated and conveyed from a source of supply thereof to the platen of the press, thereby obviating the necessity for accomplishing the same purpose by hand.

In addition to the foregoing my invention comprehends improvements in the details of construction and arrangement of parts to be hereinafter more fully described and particularly set forth in the appended claims.

In the accompanying drawings in which similar and corresponding parts are designated by the same characters of reference throughout the several views in which they appear:—

Figure 1 is a view in plan of a conveying apparatus constructed after the manner of my invention, and illustrating its association with the platen and certain of the working parts of a printing press of conventional type.

Fig. 2, is a view of the apparatus of the preceding figure in front elevation and

Fig. 3 is a detail view in section of a valve.

With reference to the drawings, 10 indicates generally a portion of the frame of a job printing press or the like, and 11 the platen thereof which in this instance is presumed to be stationary, nevertheless it will be found that the apparatus of the present invention may be adapted for operation in connection with a movable platen as well.

The present invention includes a frame indicated generally at 12, and which comprises a pair of spaced, parallel brackets 13 and 14 having extensions at one of their ends indicated at 15 whereby the frame may be secured to the frame of the printing press. The frame 12 is formed centrally and between the brackets with a longitudinally extending enlargement 16 apertured to form a guide, and similar enlargements 17 and 18 extending laterally from the arms 13 and 14 adjacent the extension 15 thereof, the guides 16, 17 and 18 being apertured and disposed parallel with relation to each other, and preferably horizontally. The opposite extremities of the arms 13 and 14 are provided respectively with universal joints 19 and 20, the receptive member of the joint 19 being indicated at 21. The spherical member of the joint 19 is indicated at 22, and is formed with a substantially U-shaped bearing bracket 23 the arms of which are indicated at 24 and are apertured to support for rotation one end of a lifting and conveying arm indicated at 25. Thus, it will be seen that owing to the universal joint 19, said lifting arm 25 is capable of arcuate movement in either a vertical or horizontal plane, or planes intermediate therebetween.

An actuating arm indicated at 26 is provided with a spherical member 27 for operation within the receptive member 28 of the aforesaid universal joint 20, and the opposite or upper extremity of the said arm is adapted for connection with the arm 25 through the medium of a universal joint indicated generally at 28ª. Said universal joint includes a bifurcated portion 29, on the extremity of the arm 26, and a bifurcated portion 30 swiveled to a collar 31 which is slidably mounted upon the arm 25 and is adapted to be secured in any position thereof through the medium of a set screw 32. It is to be noted at this point, that the aforesaid universal joints 19 and 20, are preferably in the same horizontal plane, and in transverse alinement, the line extending transversely through said joint being midway between the point from which

the objects are to be lifted to the point at which they are to be released and deposited. Thus, the arms 25 and 26 are disposed at an angle with relation to each other and this angle may be varied by adjusting the collar 31 along the rod 25 for such purposes as may be obvious in connection with the use of this apparatus.

Slidably mounted within the guide block 18 of the aforedescribed frame 12, is a rod 33 having connection with a link 34 through the medium of a universal joint 35, the opposite end of the link 34 being connected through the medium of a universal joint, indicated generally at 36 to the aforedescribed actuating rod 26. The universal joint 36 includes a bifurcated portion 37 on the extremity of the link 34, and a collar 38 slidably mounted upon the rod 26 and having a bifurcated portion 39, and a member 40 connecting said bifuracted portion, in a manner similar to the afore described collar 31, the last mentioned collar 38 is adapted for movement along the rod 26 and is provided with a set screw for securing the collar against movement subsequent to adjustment. The rod 33 is provided at its end adjacent the universal joint with a pin, and a coil spring 41 is encircled about the rod and fastened to the pin and to the front face of the guide block 18, thereby urging the rod 33 in a rearward direction. The opposite end of the rod 33 projects beyond the rear end of the guiding block is bifurcated to receive therebetween a roller 42 journaled for rotation in a vertical plane and is adapted to bear against an actuating cam 43 fixedly secured to a shaft 44 which is journaled for rotation in the frame of the printing press. The shaft 44 is provided with a spur gear or its equivalent 45 for engagement with a gear 46 forming a part of the mechanism for operating the printing press whereby the conveying or transferring mechanism may be actuated in unison therewith.

The guide block 16 is similarly provided with a rod 47 slidable therein, the forward extremity of which rod is connected through the medium of a universal joint 48 to a link 49 which is connected through the agency of a universal joint 50 at its opposite end to an arm 51 which extends at rightangles from the rod 25 for rotation therewith and is disposed between the arms 24 of the U-shaped bearing member 23. A pin is inserted transversely through the rod 47 adjacent the univarsal joint 48 thereof, and a coil spring 52 is encircled about said rod and interposed between said pin and the front face of the guide block 16 whereby to urge said rod in a rearward direction. The rear end of the rod 47 is provided with a bifurcated portion 53 forming a support for a roller 54 journaled for rotation in a vertical plane, and adapted to bear against the lifting rod cam 55 fixedly secured to the aforesaid shaft 44.

Mounted upon the free terminal of the lifter rod 25 is a vacuum element indicated generally at 56, and which includes an inverted cup 57 of soft rubber or the like, having a passage therein placed in communication with a flexible fluid conducting tube 58, which extends in contiguous relation to the said lifter rod and is connected at its opposite end to one port of a valve 59 through the medium of a short section of tubing 60. The valve 59 is set forth in detail in Fig. 3 from which it will be noted that the valve is of the three way type, and comprises a three way port 61 in its casing which is in communication with the short tubular section 60, a port 62 substantially in alinement therewith for connection through the medium of a tube section 62 to a receptacle, pump or the like wherein a constant vacuum is maintained, and a port 63 substantially at rightangles to the center line connecting the aforesaid ports 61 and 63, which port 63 is adapted to be placed in communication through the medium of a conductor 54 with a source of air under pressure. The valve proper is mounted for rotation within the valve casing, as indicated at 65, provided with ports therein and an operating handle 66. The valve 59 is placed adjacent the afore described guide block 17, and a rod 67 is slidably mounted within said guide block, and is provided at its forward extremity with a bifuracted portion 68 through which the handle 66 of the valve extends. A pin is extended transversely through the rod 67 and coil spring 69 is interposed between said pin and the front face of the block 17, for urging the rod in a rearward direction, and to cause the valve within the valve casing to overlap both of the ports 62 and 63, thereby disestablishing communication between either the source of vacuum or compressed air, and the vacuum element 56. The rear end of the rod 67 is bifurcated, as at 70, and provided with a roller 71 journaled therein for rotation in a vertical plane, and in engagement with a valve actuating cam 72 also mounted upon the aforesaid shaft 44 for rotation therewith.

To further increase the efficiency of my apparatus, I may provide a support in the nature of a turn table indicated at 73 for supporting the paper which is to be transferred to the platen of the printing press, by rotating this turntable, the paper may be disposed at such an angle relative to the apparatus and of the platen as to enable the apparatus to deposit the paper upon the platen in the proper position.

In operation, the lifter arm 25 of the apparatus is disposed with its free extremity

and vacuum element adjacent the turn table and in the position indicated in Fig. 1. The arm is adapted to rest upon the surface of the paper supported upon the turn-table, and follow the stack of paper as it decreases in height due to the transfer of its elements, this following movement is permitted to some extent through the medium of the loose connection of the lifter rod and its associated elements, and when this following movement has reached its limit, the paper may be raised to the proper elevation for contact with the vacuum element by adjusting its standard 74 in the telescoping support 75 thereof.

The shaft 44 forming a part of my invention is adapted to be rotated constantly by the operating mechanism of the printing press, and at the proper moment, that is when the type form has left the platen, the cam 72 should actuate the sliding rod 67 to rotate the valve whereby to dispose the port 62 in communication with the pipe section 60 whereby a vacuum from the source thereof is communicated to within the vacuum cup, and as a result, the top sheet of paper in contact with the lower surface or edge of the vacuum cup will be held thereagainst. The next succeeding operation is induced by the cam 43, and as a result thereof the rod 33 is permitted to move backward under the tension of its spring 41, so as to spring the actuating rod 26 upon its universal connection 20, thereby in turn swinging the lifter arm 25 and owing to the angular relation of said lifter arm, and arm 26, to swing the vacuum cup in the arc of a circle which will be partly in a vertical and partly in a horizontal plane. Continued movement of the lifter arm 25 and its said actuating arm 26, will thus carry the sheet of paper which adheres to the vacuum cup from the supply thereof upon its table 73 to the platen 11 of the printing press. During such movement, the sheet paper adhering to the vacuum cup is obviously changing its position with relation to the paper remaining upon the turn-table 73, and before it has reached the platen, the lifter rod actuating cam 55 will have rotated to position, to permit the rod 47 to move rearward under the tension of its spring whereby to cause the link 49 to exert a pull upon the arm 51 thereby slightly rotating the lifter arm 25 whereby to dispose the paper supported upon said arm from a horizontal plane to a plane at an angle thereto, which angle coincides with the angle of the platen 11 of the printing press. At the instant when the paper has reached the platen, and when the cam 43 is acting to urge the rod 33 forward to replace the actuating rod 26 and consequently the rod 25 to its former position, the shaft 72 will, by continued rotation, rotate the valve within the valve casing to establish communication between the port 63 and the vacuum element. Thus, pressure will be created within the vacuum cup whereby to force the paper supported thereby upon the platen.

Thus it will be seen, the operation of transferring the paper from a source of supply thereof to a platen of a printing press or the like, while the same is in motion is accomplished automatically, thus enabling the operator to merely remove the paper after it has been printed upon. From the foregoing, it will be obvious that while my invention has been set forth in detail in connection with a printing press, for feeding papers thereto, nevertheless, it may be employed to raise and transfer other light objects in connection with other machinery or in other arts and industries, and therefore, I do not desire to limit myself in this application to the use as herein set forth. And furthermore, while I have illustrated and described my invention with some degree of particularity, I realize that in practice that various alterations thereover may be made and I therefore reserve the right and privilege of changing the form of the details of construction, or otherwise altering the arrangement of the correlated parts without departing from the spirit of the invention or the scope of the appended claims.

Having thus described my invention what I claim as new and desire to secure by Letters Patent is:—

1. In a paper conveying mechanism for printing presses, an arm, means supporting one end of the arm to permit universal swinging movement thereof and to permit rotary axial movement of the arm, means forming an auxiliary support for the arm to cause swinging movement thereof in the arc of a circle and to cause the free end of the arm to travel in a path lying between a horizontal and vertical plane, means for swinging the arm in the manner stated, means for rotating the arm axially, a vacuum cup carried by the free end of the arm, and means for creating a fall of pressure in the cup in one position of the arm, and a rise of pressure therein in another position of the arm.

2. In a conveying apparatus, a vacuum cup; an arm for supporting the cup, supporting means for the arm permitting universal swinging movement thereof, means for swinging said arm in one direction or the other, and means operable for creating a rise of pressure within the cup in one position of its supporting arm on a decrease in pressure in another position thereof.

3. In a conveying apparatus, a vacuum cup for engaging an object, an arm supporting at one extremity the cup, means supporting the other end of the arm and for permitting universal movement thereof, an actuating arm, a support for said arm permitting universal movement thereof, means

connecting the opposite extremity of the actuating arm with the aforesaid lifting arm, means for moving said actuating arm whereby the lifting arm may be moved to cause the cup thereon to describe a path in a plane which is intermediate between a vertical and horizontal plane, and means for creating a decrease of pressure within the cup while in its first position, said means being operable to create an increase of pressure within the cup at its second position.

4. In a conveying apparatus, a frame, a lifting arm, a universal joint connecting one end of said lifting arm with the frame whereby universal movement of the arm may be permitted, a vacuum cup supported at the opposite extremity of the arm, an actuating arm, a universal joint supported upon the frame for supporting one extremity of said actuating arm, a universal joint connecting the opposite extremity of said actuating arm with the lifter arm, said arms being thus disposed in diverging relation, means for swinging the actuating arm upon its universal support whereby to cause the vacuum cup to describe an arc in a plane intermediate between a vertical and horizontal plane, means for rotating the lifter rod when it has reached its second position to dispose the object supported by the vacuum cup in a plane different from its former plane, and means for creating a decrease of pressure in the cup when in its former position, said means being operable to create a rise of pressure in the cup at the second position thereof.

5. In combination with a job printing press, means for feeding paper to the platen thereof, including an arm mounted for universal movement, a vacuum cup supported by said arm to receive and adhere to a sheet of paper, means for moving said arm from a location adjacent the source of paper supply to the platen, and means for creating a decrease of pressure below atmospheric pressure within the cup when it is adjacent the source of paper supply, said means being operable to create a rise of pressure above atmospheric pressure within the cup when the paper is brought adjacent the platen.

6. In combination with a job printing press, means for feeding paper to the platen thereof including an arm mounted for universal oscillation, a vacuum cup supported thereby, means for imparting to said arm a movement whereby the cup may be swung in an arc which is in a plane intermediate between a vertical and horizontal plane whereby to transfer paper from a source of supply thereof to the platen, and means for creating a decrease of pressure below atmospheric pressure in the cup at its first position, to cause the paper to adhere thereto, said means being operable to create an increase of pressure above atmospheric pressure within the cup when adjacent the platen to cause the paper to be released therefrom.

7. In combination with a job printing press means for feeding paper to the platen thereof, including a lifter arm supported at one end for universal movement, a vacuum cup supported at its opposite end, an actuating arm universally connected to said lifter arm and extending in diverging relation thereto, means for universally supporting the opposite end of said actuating rod, means for swinging said actuating rod to thereby move the lifter rod to cause the cup to move in the arc of a circle which is in a plane intermediate between a vertical and horizontal plane and means for creating a decrease of pressure within the cup when at its first position to engage and adhere to a sheet of paper, said means being operable to create a rise of pressure within the cup when adjacent the platen to cause the paper to be released therefrom.

8. In combination with a job printing press, means for feeding paper thereto including an arm, means supporting the arm to permit universal movement thereof, a vacuum cup upon the opposite extremity of the arm, an actuating rod universally connected to said lifting arm, and extending in diverging relation thereto, means supporting the opposite extremity of the actuating rod for permitting universal movement thereof, a cam shaft adapted to be operated by the operating mechanism of the printing press, a trio of cams fixedly secured to said shaft, means operable by one of the cams for actuating the actuating arm to thereby move the lifter arm to cause the vacuum cup thereof to describe a path which is in a plane intermediate a vertical and horizontal plane, pneumatic means for creating a decrease of pressure within the cup to cause a sheet of paper to adhere thereto, whereby the paper may be brought adjacent the platen, means operable by the second cam for rotating the lifter rod to dispose the paper supported by the cup in a plane coincident with the plane of the platen, and means operable by the first cam for actuating the pneumatic means, said pneumatic means being operable to create a rise of pressure within the cup when in its second position to cause the paper to be released therefrom.

In testimony whereof I affix my signature in presence of two witnesses.

ERNEST N. HOGUE.

Witnesses:
E. T. MOYLER,
JOHN A. HOUK.

Copies of this patent may be obtained for five cents each, by addressing the "Commissioner of Patents, Washington, D. C."