US00RE38376E

(19) **United States**

(12) **Reissued Patent**

Matthews, III

(10) **Patent Number: US RE38,376 E**

(45) **Date of Reissued Patent: *Dec. 30, 2003**

(54) **MESSAGE DELIVERY METHOD FOR INTERACTIVE TELEVIDEO SYSTEM**

(75) Inventor: **Joseph H. Matthews, III**, Woodinville, WA (US)

(73) Assignee: **Microsoft Corporation**, Redmond, WA (US)

(*) Notice: This patent is subject to a terminal disclaimer.

(21) Appl. No.: **10/020,283**

(22) Filed: **Dec. 14, 2001**

Related U.S. Patent Documents

Reissue of:

(64) Patent No.: **6,005,602**
Issued: **Dec. 21, 1999**
Appl. No.: **09/241,827**
Filed: **Feb. 1, 1999**

U.S. Applications:

(63) Continuation of application No. 08/968,386, filed on Nov. 12, 1997, now Pat. No. 5,874,985, which is a continuation of application No. 08/521,799, filed on Aug. 31, 1995, now abandoned.

(51) **Int. Cl.**[7] **H04N 7/14**

(52) **U.S. Cl.** **725/34**; 725/33

(58) **Field of Search** 725/34, 32, 33, 725/35, 36, 136, 137; H04N 7/14, 7/10

(56) **References Cited**

U.S. PATENT DOCUMENTS

3,891,792 A * 6/1975 Kimura 348/564
4,890,320 A * 12/1989 Monslow et al. 725/87
5,260,778 A * 11/1993 Kauffman et al. 725/32
5,512,934 A * 4/1996 Kochanski 725/87
5,585,838 A * 12/1996 Lawler et al. 725/41

FOREIGN PATENT DOCUMENTS

GB 2232031 * 11/1990
WO 89/10664 * 11/1989

* cited by examiner

Primary Examiner—Sherrie Hsia

(74) *Attorney, Agent, or Firm*—Woodcock Washburn LLP

(57) **ABSTRACT**

The present invention includes a method of selectively delivering programming to a viewer station (e.g., a home) on an interactive television or televideo (IT) system. The method includes delivering a message to a selected viewer station having a selected video display set. The message may be delivered while the selected viewer station receives virtually any programming over the interactive televideo system, including selected programming that is chosen by a viewer at the selected viewer station and is carried on a selected programming channel. With reference to a preferred embodiment, the IT system transmits a message signal to the selected viewer station on a communication channel different from the channels carrying the programming, including the selected programming channel. The interactive station controller receives the message signal and generates from it a viewer message.

10 Claims, 4 Drawing Sheets

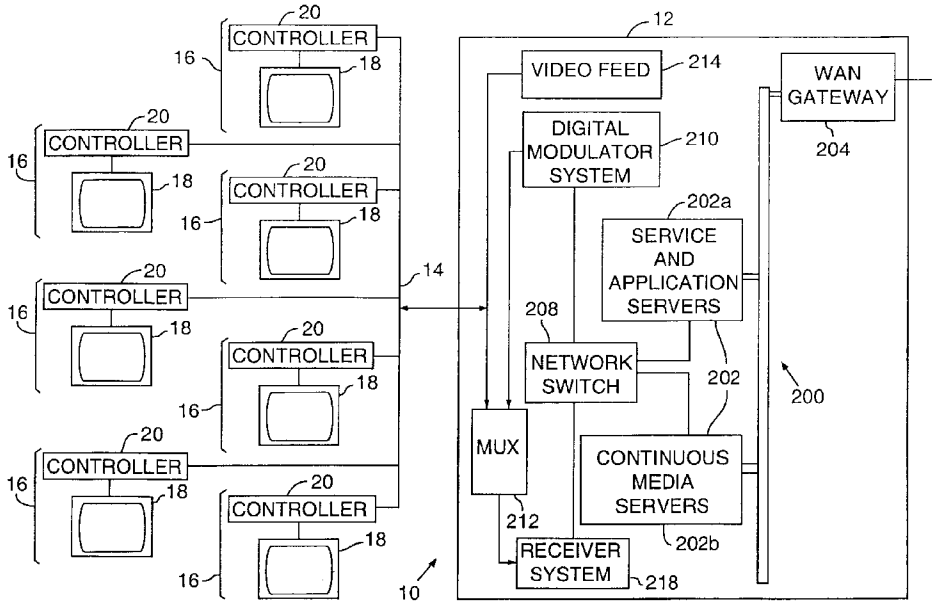

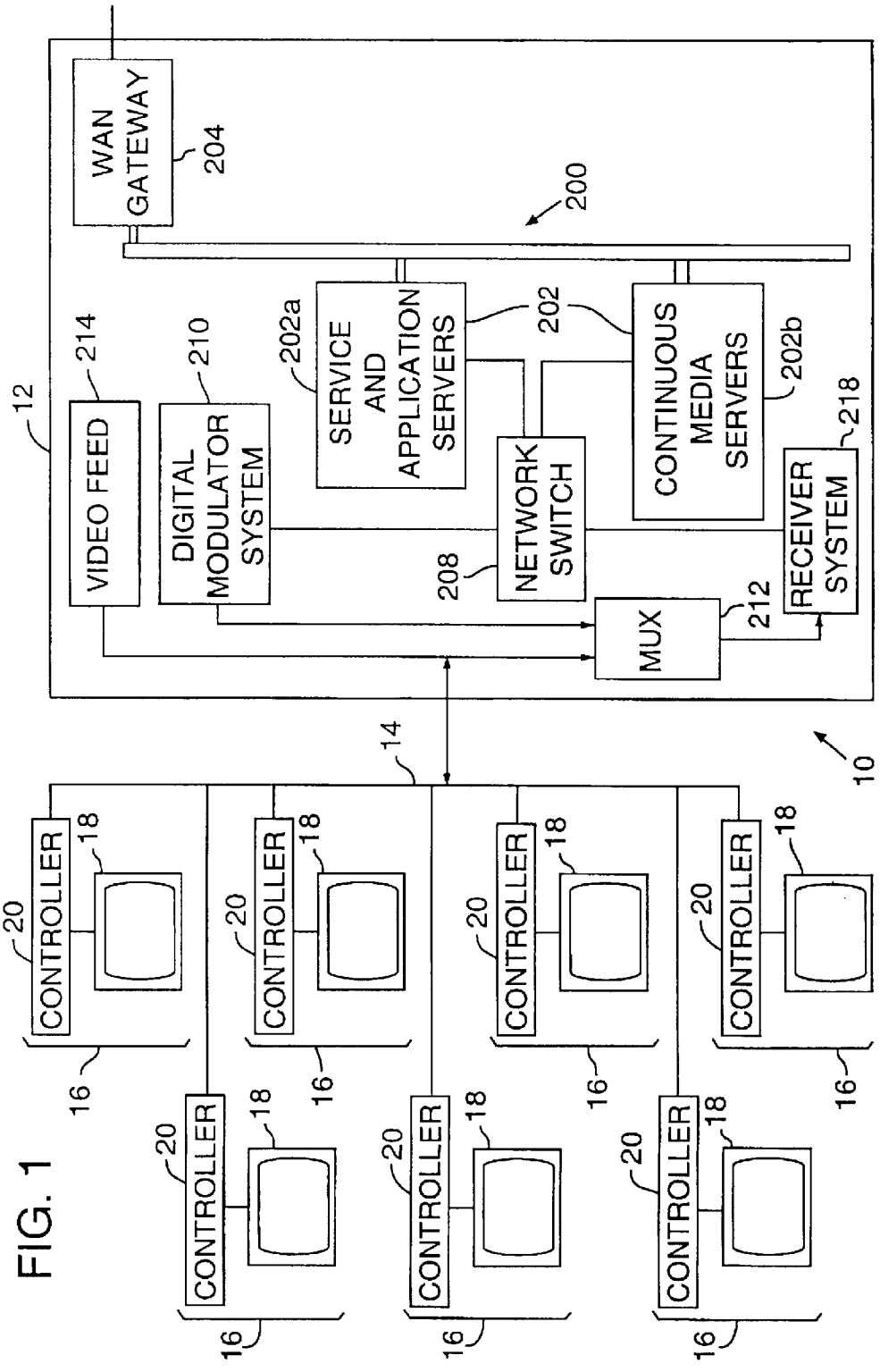
WAN GATEWAY
204
200
VIDEO FEED
214
DIGITAL MODULATOR SYSTEM
210
SERVICE AND APPLICATION SERVERS
202a
202
CONTINUOUS MEDIA SERVERS
202b
218
RECEIVER SYSTEM
NETWORK SWITCH
208
MUX
212
12
14
10
CONTROLLER
20
18
16

FIG. 1

FIG. 2

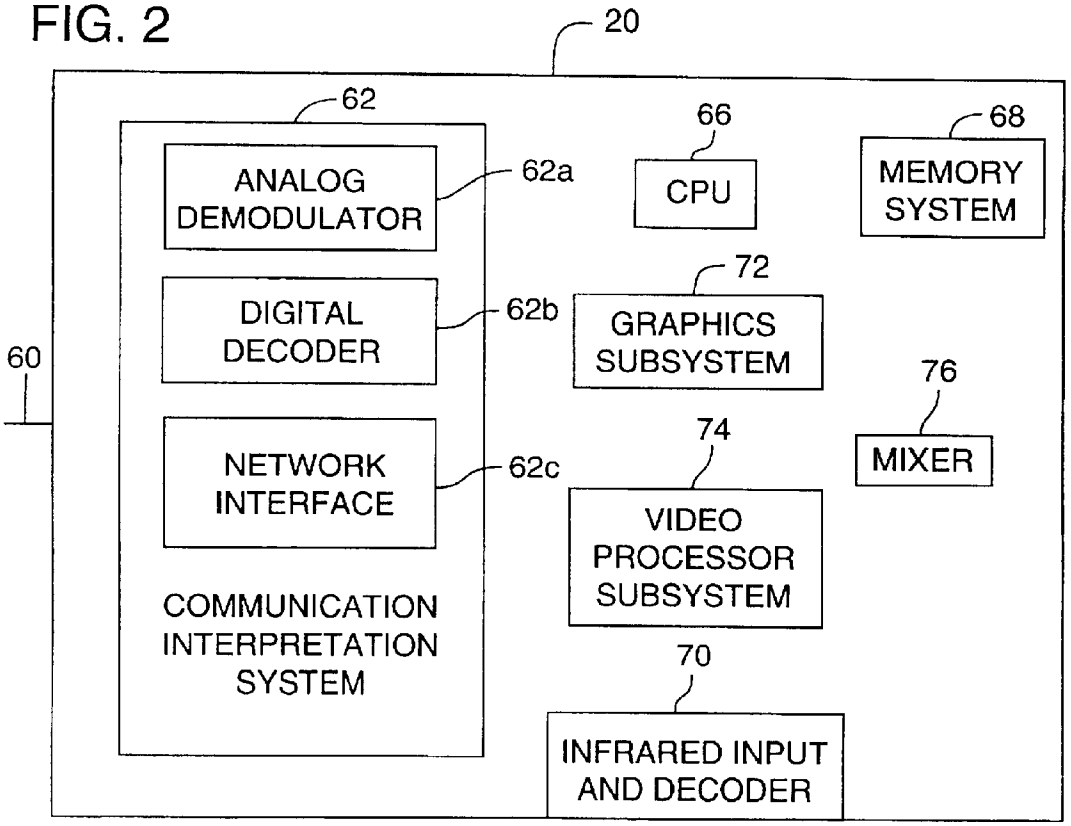
20
62
66
68
ANALOG DEMODULATOR
62a
CPU
MEMORY SYSTEM
72
DIGITAL DECODER
62b
GRAPHICS SUBSYSTEM
60
76
74
NETWORK INTERFACE
62c
MIXER
VIDEO PROCESSOR SUBSYSTEM
COMMUNICATION INTERPRETATION SYSTEM
70
INFRARED INPUT AND DECODER

FIG. 3

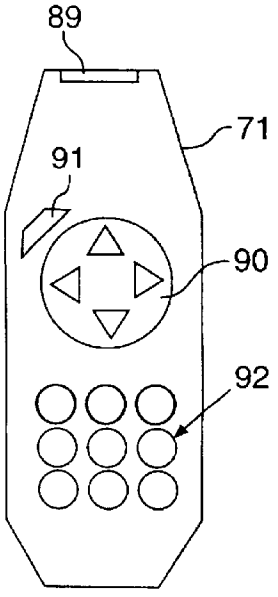
89
71
91
90
92

FIG. 4A

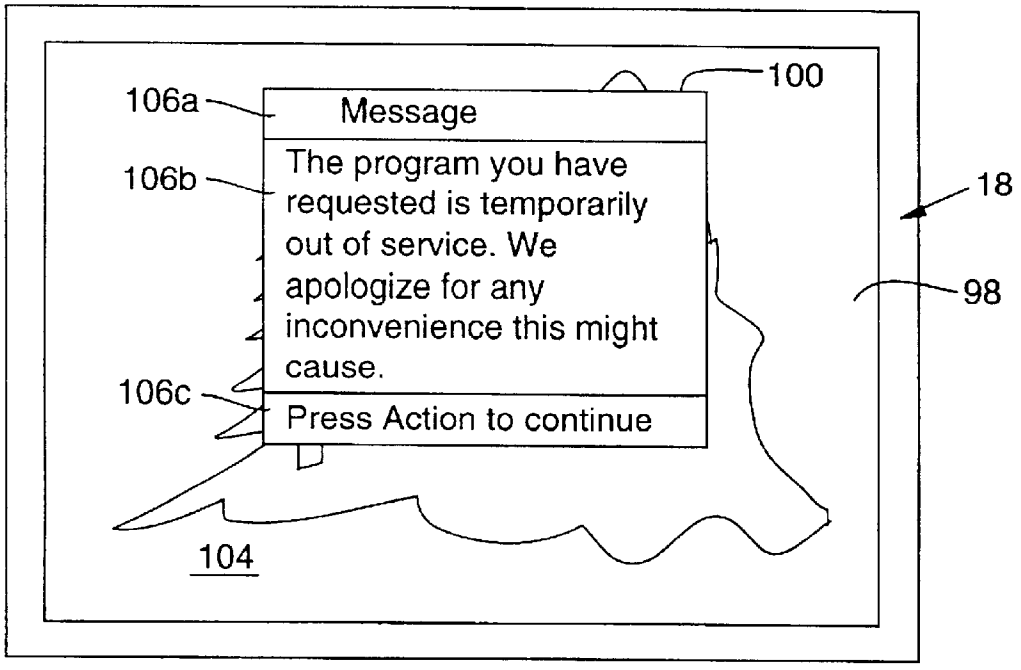
100
106a
Message
106b
The program you have requested is temporarily out of service. We apologize for any inconvenience this might cause.
106c
Press Action to continue
18
98
104

FIG. 4B

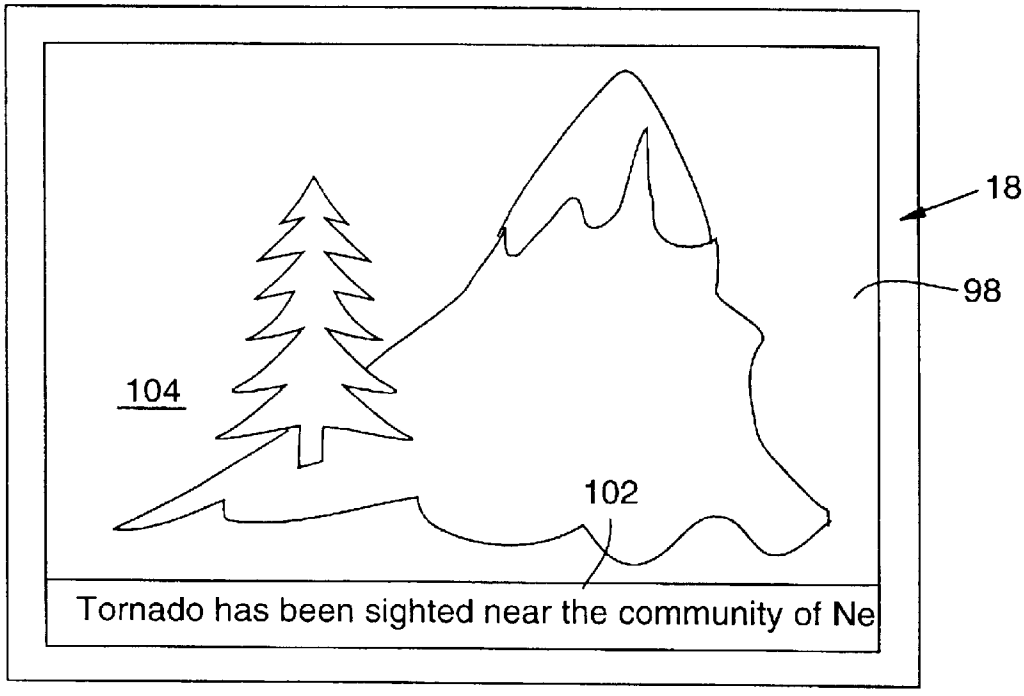
18
98
104
102
Tornado has been sighted near the community of Ne

FIG. 5

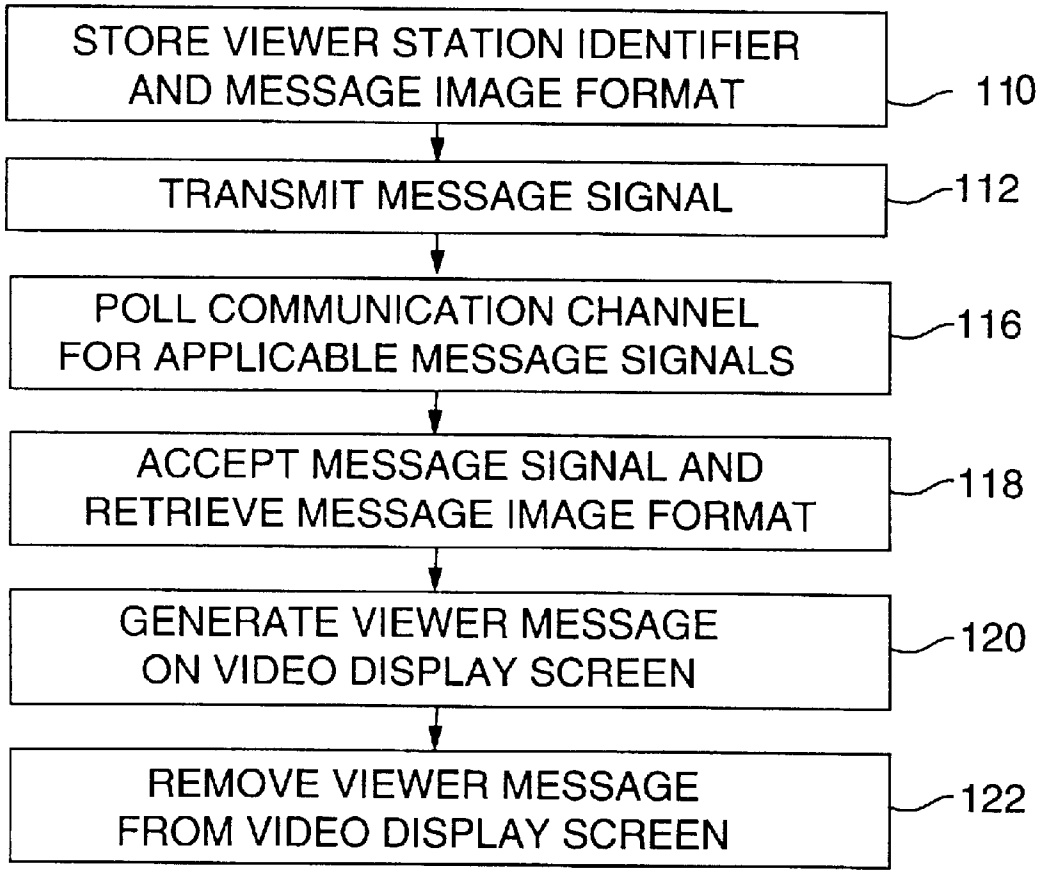
STORE VIEWER STATION IDENTIFIER AND MESSAGE IMAGE FORMAT
110
TRANSMIT MESSAGE SIGNAL
112
POLL COMMUNICATION CHANNEL FOR APPLICABLE MESSAGE SIGNALS
116
ACCEPT MESSAGE SIGNAL AND RETRIEVE MESSAGE IMAGE FORMAT
118
GENERATE VIEWER MESSAGE ON VIDEO DISPLAY SCREEN
120
REMOVE VIEWER MESSAGE FROM VIDEO DISPLAY SCREEN
122

MESSAGE DELIVERY METHOD FOR INTERACTIVE TELEVIDEO SYSTEM

Matter enclosed in heavy brackets [ ] appears in the original patent but forms no part of this reissue specification; matter printed in italics indicates the additions made by reissue.

CROSS REFERENCE TO RELATED APPLICATION

This application is continuation of application Ser. No. 08/968,386, Nov. 12, 1997, U.S. Pat. No. 5,874,985, which was a continuation of application Ser. No. 08/521,799, filed Aug. 31, 1995, now abandoned.

FIELD OF THE INVENTION

The present invention relates to interactive television or televideo systems and, in particular, to a method of delivering messages to viewer stations associated with such systems.

BACKGROUND OF THE INVENTION

Conventional cable and satellite television transmission is evolving into interactive television or televideo (IT) systems. IT systems combine the video broadcast capability characteristic of conventional broadcast television with computer-executed applications or programming responsive to input from viewers. By some estimates, IT systems under development could include the equivalent of 500 channels of video broadcasting and unlimited numbers of interactive applications.

Conventional broadcast television networks primarily transmit scheduled video programming that emphasizes entertainment, education, or commercial advertising. The conventional scheduled programming is sometimes interrupted for unscheduled public announcements relating to, for example, broadcast system technical difficulties, critical events, or weather or disaster alerts.

Public announcements in conventional broadcast television systems are broadcast on the channels carrying the scheduled programming. Critical public announcements typically are broadcast as substitutes for the scheduled programming. The broadcasting of the scheduled programming is stopped and in its place the public announcement is broadcast. These substitution-type public announcements commonly are voiced or spoken and include a video segment or a still-image graphic display. This type of public announcement is typically used to announce broadcast system technical difficulties and weather or disaster alerts.

Non-critical public announcements may be generated as text that is added to a video broadcast signal (e.g., along a bottom display screen margin). The broadcasting of the scheduled programming continues uninterrupted, but the broadcast signal carrying the scheduled programming is modified to include the public announcement text. These modification-type public announcements seldom include voice or spoken components and are commonly used to announce non-critical programming delays or news (e.g., sports results).

Typically, public announcements are made by the broadcasters that provide or generate the programming carried on a particular channel. Conventional cable television (CATV) network operators seldom generate such announcements. Conventional CATV network operators are substantially passive rebroadcasters of programming provided or generated by others. As a consequence, viewers of a conventional CATV network typically can receive public announcements only if the viewers are tuned to programming provided by a broadcaster that makes public announcements (e.g., conventional local television stations or national television networks).

With the relatively large amounts of programming planned for IT systems, it is expected that the proportion of viewers tuned to such conventional broadcasters will decline. Much of the alternative programming is likely to be generated by providers who are remote from the viewer or have no public announcement capabilities. With conventional channel-based broadcasting of public announcements, viewers tuned to such programming could be denied the benefit of receiving public announcements. For critical events and local weather or disaster alerts, the absence of public announcement services can pose a grave risk to viewers.

In addition to the difficulty of delivering public announcements to the program or channel a viewer is actually watching, another disadvantage is that public announcements on conventional television are delivered to all viewers tuned to a particular channel. As a consequence, conventional television is incapable of providing a public announcement only to specific viewers for which the announcement is applicable or appropriate.

With particular reference to IT systems, conventional substitutions or modifications of video signals for public announcements is incompatible with programming in the form of computer-executed applications. Many such applications would not include a video broadcast that could be modified with a public announcement. Moreover, public announcements could unpredictably disrupt the operation of such applications.

SUMMARY OF THE INVENTION

The present invention includes a method of selectively delivering programming to a viewer station (e.g., a home) on an interactive television or televideo (IT) system. The IT system includes a central control node that delivers programming to multiple viewer stations. Each viewer station has a video display set (e.g., a television receiver) and an associated interactive station controller that is responsive to input from the viewer for controlling programming on the video display set.

The method of this invention includes delivering a message to a selected viewer station. The message preferably is formed at the central control node and directed to the selected viewer station in accordance with computer-executed software of this invention. Similarly, the selected viewer station receives and responds to the message in accordance with the software.

The message may be delivered while the selected viewer station receives any programming over the interactive televideo system, including selected programming that is chosen by a viewer at the selected viewer station and is carried on a selected programming channel. The selected programming may be conventional video programming or a computer-executed application.

With reference to a preferred embodiment, the IT system transmits a message signal to the selected viewer station on a communication channel different from the channels carrying the programming, including the selected programming channel. The interactive station controller receives the message signal and generates from it a viewer message.

The interactive station controller renders the viewer message on the video display set over the selected programming.

The viewer message selectively includes a viewer acknowledgement block requiring the viewer to acknowledge the viewer message to have it removed from the video display set. Alternatively, the viewer message remains for a preselected duration and then is removed automatically.

This invention allows an IT system operator to provide public announcements to any or all subscribers regardless of the programming they are receiving. The public announcement can provide information to viewers receiving programming generated by any source, including computer-executed applications operated by the IT system. The IT system operator can provide such announcements without having to modify each of up to about 500 channels of programming.

The foregoing and other features and advantages of preferred embodiments of the present invention will be more readily apparent from the following detailed description, which proceeds with reference to the accompanying drawings.

BRIEF DESCRIPTION OF THE DRAWINGS

FIG. **1** is a block diagram of an interactive television system used for the preferred embodiment of this invention.

FIG. **2** is a block diagram of an interactive station controller used for the preferred embodiment of this invention.

FIG. **3** is a plan diagram of a viewer control unit for providing viewer input to the interactive station controller of FIG. **2**.

FIGS. **4**A and **4**B are diagrams of a video display screen with respective first and second viewer message blocks of the present invention.

FIG. **5** is a flow diagram of a method of delivering a message to a selected viewer station according to the present invention.

DETAILED DESCRIPTION OF PREFERRED EMBODIMENTS

FIGS. **1** and **2** are directed to an interactive television for televideo (IT) system **10** as an operating environment for preferred embodiments of the present invention. For purposes of simplicity and clarity, IT system **10** is described with reference to widely available systems and standards, including conventional analog television receivers and cable-based video networks.

It will be appreciated, however, that the particular components of IT system **10** may be implemented with a variety of conventions, standards, or technologies without departing from the underlying concepts of the present invention. The term televideo is used to emphasize the applicability of this invention beyond standard television-based systems. As two examples, the conventional analog television receivers and cable-based video network referred to in FIGS. **1** and **2** could be implemented as digital video receivers and a satellite downlink transmission system, respectively.

FIG. **1** is a simplified block diagram of an interactive televideo (IT) system **10** having a central control node **12** that transmits programming over a network **14** to multiple viewer stations (e.g., homes) **16**. The programming may include standard analog video broadcasts (e.g., NTSC, PAL or SECAM), digital or digitally encoded video broadcasts (e.g., MPEG**1** or MPEG**2**), or digital information related to computer-executed applications.

Each viewer station **16** includes at least one video display set **18** (e.g., a television receiver) and an interactive station controller **20**, which is sometimes referred to as a set-top box. Although it is shown distinct from video display set **18**, interactive station controller **20** could alternatively be integral with video display set **18**.

Interactive station controllers **20** receive programming from central control node **12** and control the associated video display sets **18** in accordance with the programming. Controlling video display set **18** of a conventional analog type may include, for example, delivering an analog video signal directly to video display set **18** for display, converting a digital video signal to a suitable analog form for display, or executing a computer application that includes displays on display set **18**.

Interactive station controllers **20** transmit digital information to and receive digital information from central control node **12**. The digital information typically relates to applications executed by processors residing at control node **12** and station controller **20**, as described below in greater detail.

Preferably, network **14** carries bidirectional communication between station controllers **20** and central control node **12**. Alternatively, communication between station controllers **20** and central control node **12** can be carried by different communication systems. For example, programming from central control node **12** to station controllers **20** could be carried on a satellite downlink while station controllers **20** send information to central control node **12** on a terrestrial modem link. An exemplary embodiment of central control node **12** is described in greater detail below.

FIG. **2** is a simplified block diagram of an exemplary one of interactive station controllers **20** for controlling video display set **18** and communicating with central control node **12**. Station controller **20** includes an input **60** that delivers communication or information from central control node **12** to a communication interpretation system **62** having, for example, an analog television demodulator **62**a, a digital video decoder **62**b, and a digital network communication interface **62**c.

Demodulator **62**a functions as a conventional television tuner for selecting one of multiple conventional analog video signals received from central control node **12** at input **60**. Video decoder **62**b functions as a digital equivalent of demodulator **62**a for selecting one of multiple digital video signals received at input **60** from central control node **12**. Network communication interface **62**c communicates with central control node **12** with digital information carried over baseband frequencies. The baseband frequencies may be below the conventional analog video signal frequencies, above the digital video signal frequencies, or between the frequencies of analog or digital signals.

A central processing unit (CPU) **66** in conjunction with a memory system **68** controls operation of station controller **20**. CPU **66** is responsive to an infrared receiver and decoder system **70** that receives user input from a hand-held viewer control unit **71** (FIG. **3**) and delivers the input to CPU **66**. For example, CPU **66** controls selection of analog- or digital-based programming or applications delivered from central control node **12**, accesses, activates, or executes selected applications, or delivers information to or requests information from central control node **12**.

A graphics subsystem **72** is controlled by CPU **66** to form graphics images, including interactive system user interface images, on video display set **18**. A video processor subsystem **74**, also controlled by CPU **66**, provides control in the rendering of video imagery, including decompressing digital video signals and sizing and positioning a video display window.

A mixer **76** receives a video display signal from video processor subsystem **74** and graphics image signals from graphics subsystem **70** and delivers a mixed image signal to video display set **18**. Mixer **76** provides compositing, masking and blending of display signals from two or more image sources such as, for example, a digital video signal and locally-generated graphics or an analog video signal and a bitmap image received from central control node **12**.

Referring to FIG. **3**, viewer control unit **71** includes an infrared transmitter window **89** through which control unit **71** emits infrared signals to infrared input **70** of station controller **20**. A directional control keypad **90** allows a viewer to transmit signals to station controller **20** according to displays it renders on the video display set **18**. The viewer may initiate or activate selections by depressing an action key **91** and may enter numeric values with numeric key pad **92**.

FIGS. **4**A and **4**B show a display screen **98** of one of video display sets **18** with, respectively, a message dialog block **100** and a flash message block **102** of the present invention rendered thereon. Message blocks **100** and **102** are formed in response to message signals received by the associated interactive station controller **20** from central control node **12**. Message blocks **100** and **102** preferably are displayed over selected programming currently rendered on display screen **98**. For purposes of illustration, FIGS. **4**A and **4**B each show a simplified graphic **104** representing selected programming over which message blocks **100** and **102** are rendered. The selected programming may include broadcast video material or computer-executed applications.

Dialog message block **100** includes a title segment **106**a, a text body segment **106**b, and a close prompt segment **106**c. As suggested by the close prompt segment **106**c, dialog message block **102** remains on display screen **98** and over the selected programming until a viewer acknowledges the message by pressing action key **91** on viewer control unit **71**, or the expiration of a default message period.

Flash message block **102** preferably is configured as a horizontal band that extends across display screen **98** at a selectable vertical position. A single line of text extends across and typically scrolls horizontally through flash message block **102**. Flash message block **102** remains on display screen for a duration determined at central control node **12**.

As described below in greater detail, viewer messages can be delivered to selected viewer stations **16** and can be rendered over virtually any IT system programming. Selective delivery of viewer messages provides the capability to transmit universal messages to all viewer stations **16**, as well as individualized messages to different viewer stations **16**. Individualized messages can relate, for example, to IT system accounting matters or replies to service inquiries.

FIG. **5** is a flow diagram showing a method of delivering a message to a selected viewer station **16** of IT system **10**. The message is formed at central control node **12** and directed to selected viewer station **16** by this method in accordance with computer-executed software. Similarly, selected viewer station **16** receives and responds to the message in accordance with the software. The method of FIG. **5** is described with reference to delivering a message to a single viewer station **16**. It will be appreciated that the method is similarly applicable to delivering a message to any group of viewer stations **16**, including all viewer stations **16** of IT system **10**.

Process block **110** indicates that a viewer station identifier corresponding to the selected viewer station **16** and a message image format representing at least one of dialog message block **100** and flash message block **102** are stored in IT system **10**. Preferably, the viewer station identifier is stored within memory **68** of interactive station controller **20** and at central control node **12**, and the message image formats representing both message blocks **100** and **102** are stored in memory **68**. The message image formats stored within memory **68** of interactive station controller **20** allow messages to be transmitted to the selected viewer stations **16** with minimal message image format information.

The message image formats include graphic parameters by which graphic subsystem **72** of controller **20** can generate: message blocks **100** and **102**, the text rendered within message blocks **100** and **102**, and transitional graphic effects for indicating the opening and closing of a viewer message. For example, visual transitional effects could include shifting a message block **100** or **102** into place or constructing it from a dithered pixel pattern over a brief period. The message image formats can also include audio transitional effects, such as brief message opening and closing chimes or tones.

Process block **112** indicates that central control node **12** transmits a message signal over IT system **10** to the selected viewer station **16**. The message signal includes a message, a station identifier corresponding to the selected viewer station **16**, and a message image format indicator representing a dialog message block **100** or a flash message block **102**. The message image format indicator includes specific message block information such as size for a dialog message block **100** and vertical screen position and duration for a flash message block **102**. The message preferably is a text or written format and additional or alternatively includes an audio component (e.g., voice announcement). Moreover, a dialog message block **100** can additionally or alternatively include a video component. For messages directed to multiple selected viewer stations **16**, the station identifier in the message signal would include a component common to all the multiple stations **16**.

The message signal preferably is transmitted to the selected viewer station **16** on a channel different from the channels carrying programming. For example, the message signal may be transmitted on a dedicated IT system communication channel. The benefit of such a communication channel is that the interactive station controller **20** can receive the message signal regardless of the programming received by viewers at selected viewer station **16**.

Process block **116** indicates that interactive station controller **20** of selected viewer station **16** polls the communication channel periodically for applicable message signals. Applicable message signals are directed to the selected viewer station **16** and include a station identifier corresponding to the one stored in station controller **20**.

Process block **118** indicates that interactive station controller **20** of selected viewer station **16** identifies an applicable message signal, accepts it, and in response to it retrieves the corresponding message image format.

Process block **120** indicates that interactive station controller **20** generates a viewer message on the associated video display screen **78** in accordance with the message signal and the message image format. For example, the appropriate viewer message block is generated by the graphics subsystem **72**.

Process block **122** indicates that the viewer message is removed from the video display screen **78**. Whenever the viewer message is rendered as a dialog message block **100**, the viewer message remains on display screen **98** until a viewer acknowledges the message according to the instruc-

tions in the close prompt segment **106**c (e.g., press action key **91**) or the expiration of a message default period (e.g., 5 minutes). Whenever the viewer message is rendered as a flash message block **102**, the message is rendered on display screen **98** for the duration indicated in the message signal, which duration may be based upon an integer number of repetitions of the message text.

The method of this invention can provide messages over any programming carried on IT system **10**, including conventional video programming and computer-executed applications. With regard to video programming, a message is rendered over the programming as it continues to be broadcast.

With regard to application programming, interactive station controller **20** interrupts or suspends execution of the programming in response to the message signal. Interruption or suspension of application execution is analogous to that characteristic of single-threaded multitasking operating systems such as Windows v.3.x from Microsoft Corporation. It will be appreciated that for some IT system services, such as video-on-demand, transmission of a video program could be suspended in the same manner as is application programming.

Referring to FIG. **1** central control node **12** includes a digital local area network (LAN) **200** with multiple computer servers **202** for performing various interactive system applications or functions referred to above. Servers **202** include, for example, multiple state-of-the-art microprocessors that operate in parallel and access or control data storage devices with large data capacities. A digital communication gateway **204** couples LAN **200** to a wide area network (WAN) (not shown) for obtaining an delivering IT system information.

Servers **202** may include, for example, service and application servers **202**a and continuous media servers **202**b. Service and application servers **202**a process interactive service requests from subscribers and provide services and applications associated with operation of IT system **10**. Service and application servers **202**a may be dedicated to particular applications such as message transmission, an electronic programming guide for viewers, network security, monitoring, object storage, financial transactions, data access, and other administration functions. An operator at central control node **12** can control message content and recipients through a terminal or console associated with the applicable service **202**a, including selectively accessing audio or video components (e.g., from a service **202**b).

Continuous media servers **202**b provide storage and on-demand or near on-demand delivery of digitized video information. The digitized video information can include video programming of substantially any duration ranging from individual image frames and brief video clips to full-length motion pictures.

Servers **202** communicate with station controllers **12** via a network communication switch **208**, such as an asynchronous transfer mode (ATM) switch. For communication from servers **202** to station controllers **20**, network communication switch **208** arranges digital information received from servers **202** in a standard bidirectional digital communication format for transmission over network **14**. For communication from station controllers **12** to servers **202**, network communication switch **208** converts digital information from the standard bidirectional digital communication format for delivery to servers **202**.

Digital information from servers **202** is frequency modulated by a digital modulator system **210** for transmission over network **14**. Digital information that includes video programming is preferably modulated at frequencies greater than the standard analog television frequency range, which is 50–450 MHz under the NTSC television standard. Digital information that does not include video programming may be modulated at baseband frequencies that are less than the standard analog television frequency range, greater than the standard analog television frequency range, or between television signal frequencies.

A multiplexing system **212** receives and mixes the frequency modulated digital information from modulator system **210** and standard analog video signals obtained from a standard analog video feed **214** and delivers an IT composite signal to interactive network **14**. Analog video feed may be or include a satellite downlink, a cable receiver, or any locally generated programming. A reverse channel receiver system **218** receives and demodulates digital communications from station controller **20** for processing by servers **202**.

Having illustrated and described the principles of the present invention in a preferred embodiment, it should be apparent to those skilled in the art that the embodiment can be modified in arrangement and detail without departing from such principles. Accordingly, I claim as my invention all such embodiments as come within the scope and spirit of the following claims and equivalents thereto.

What is claimed is:

1. In an interactive televideo system having **[**a central control node in bidirectional communication with**]** plural viewer stations that include video-display sets operably coupled to interactive station controllers, the **[**central control node**]** *interactive televideo system* delivering programming over multiple channels to the plural viewer stations and receiving information from the interactive station controllers, a selected viewer station receiving selected programming on a selected programming channel and rendering the selected programming on a selected video display set, a method of delivering a message to the selected viewer station, comprising:

transmitting a message signal over the interactive televideo system to the selected viewer station; and

generating a viewer message from the message signal on the selected video display set, the viewer message being generated over the selected programming.

2. The method of claim **1** further comprising delivering the message signal to the selected interactive station controller, decoding the message signal within the selected interactive station controller, and generating the viewer message as a viewer message graphic image.

3. The method of claim **2** in which generating the viewer message graphic image includes a graphic block within which the viewer message is rendered.

4. The method of claim **2** further comprising storing a message image format within the selected interactive station controller and retrieving the message image format in response to the message signal to generate the viewer message in accordance with the viewer message graphic image.

5. The method of claim **1** in which the viewer message is generated over the selected programming until a viewer at the selected viewer station acknowledges the viewer message.

6. The method of claim **1** in which the message signal includes a message duration indicator and the viewer message is generated over the selected programming for a preselected duration corresponding to the message duration indicator.

7. The method of claim 1 in which a selected identifier is associated with the selected viewer station and the viewer message is generated at the selected viewer station only if the message signal includes the selected identifier.

8. The method of claim 7 in which the selected identifier includes an identifier component unique to the selected viewer station relative to other viewer stations of the interactive televideo system.

9. The method of claim 1 further comprising:

transmitting the message signal over the interactive televideo system to plural viewer stations that have associated video display sets and receive programming over multiple channels; and

generating the viewer message from the message signal on the associated video display sets over the programming received over multiple channels.

10. The method of claim 1 in which the selected programming includes a computer-executed application and generating the viewer message includes suspending execution of the application.

* * * * *