Nov. 16, 1948. E. E. MENDONCA 2,453,925

ELECTRIC LIGHTING SET

Filed March 4, 1946

Fig. 1.

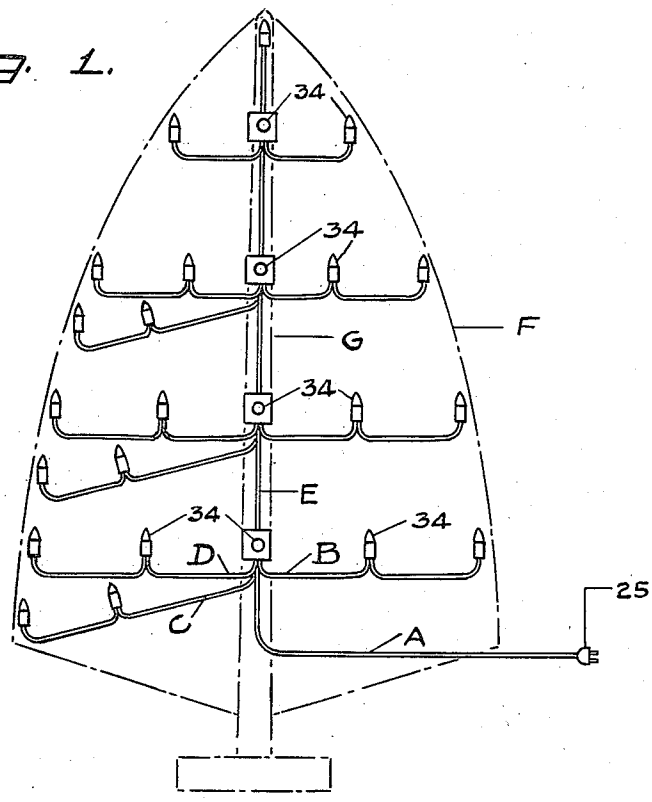

Fig. 2.

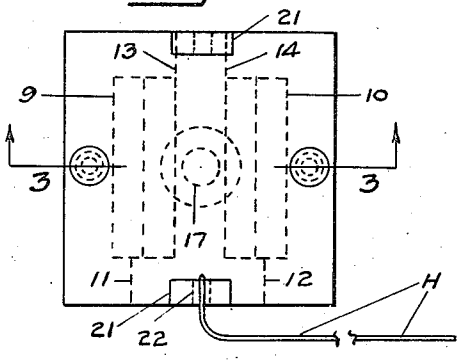

Fig. 3.

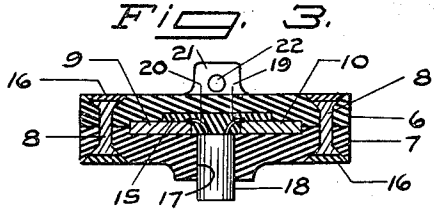

Fig. 4.

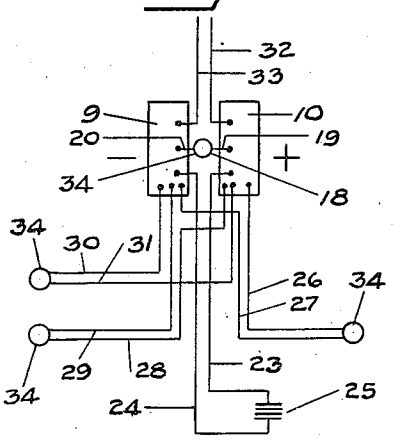

INVENTOR.

EDWARD E. MENDONCA

BY Edward C. Healy

ATTORNEY.

Patented Nov. 16, 1948

2,453,925

UNITED STATES PATENT OFFICE

2,453,925

ELECTRIC LIGHTING SET

Edward E. Mendonca, Hayward, Calif.

Application March 4, 1946, Serial No. 651,675

1 Claim. (Cl. 240—10)

1

This invention relates to an electric lighting set and has particular reference to decorative lighting of Christmas trees.

The primary object of the present invention is to provide an improved terminal box and a new method of extending the electric lamp conductors therefrom.

Another object of the invention is to construct the terminal box in two sections that are substantially similar in shape and molded from a suitable electric insulation material, such as thermal setting plastic and to form the inside of the said terminal box of such shape as will receive a pair of suitable soldering lugs or bus bars upon which the terminals of the various electric conductors are soldered.

A further object of the invention is to secure the said sections of the terminal box together by suitable screws or rivets and to completely seal the inside of the box and the ends of the said screws or rivets with a suitable electric insulation material such as electric sealing wax.

An additional object of the invention is to provide suitable apertured lugs or ears onto the terminal box for facilitating the securing of the same to the trunk of the Christmas tree.

A further object of the invention is to form one of the sections of the terminal box with an especially shaped receptacle for receiving a conventional electric lamp base or screw shell, whereby a decorative electric lamp preferably of the candelabra size is directly connected onto the box.

A still further object of the invention is to connect the lamps in the various conductors leading from the terminal box in multiple relation with the same difference of potential existing throughout the system and to provide the terminal boxes, conductors and lamps in such relative arrangements and numbers as will prevent any overloading in the entire system.

Other objects and advantages will be apparent during the course of the following description.

In the accompanying drawing forming a part of the specification, and wherein for the purpose of illustration like numerals designate like parts throughout the same,

Fig. 1 is an elevational view in dotted outline of a Christmas tree and also disclosing the improved electric lighting set provided thereon,

Fig. 2 is a top plan view of the improved terminal box,

Fig. 3 is a sectional view taken on line 3—3 of Fig. 2, looking in direction of the arrows, and

Fig. 4 is a diagrammatic view illustrating a

2

pair of lugs or bus bars which are provided into the terminal box and the various electric conductors extending therefrom.

In the accompanying drawing wherein for the purpose of illustration is shown the preferred embodiment of my invention the numeral 6 designates one of the sections that forms the terminal box and the numeral 7 the other section, the said sections being preferably molded from a suitable electric insulation material such as thermal setting plastic and are secured together by screws or rivets 8. The inner faces of the said sections are centrally recessed to accommodate a pair of lugs or bus bars 9 and 10, which recesses preferably extend through one end of the box as indicated by the dotted lines 11 and 12 and through the opposite end thereof as indicated by the dotted lines 13 and 14, whereby the various electric conductors soldered to the said lugs or bus bars extend from the box.

After the electric conductors are soldered in place, the entire recessed portion within the terminal box is filled with a suitable electric sealing wax as indicated at 15, which wax liquefies when heated and hardens, and becomes integral with the box when cold. The outer extremities of the rivets 8 are also sealed as indicated at 16, thus providing a completely sealed terminal box that is exceptionally durable and can be manufactured at an extremely low cost.

The front section 7 of the terminal box is preferably formed with a receptacle 17 for receiving a conventional electric lamp base 18 or the screw shell thereof, the numerals 19 and 20 indicating electric conductors leading therefrom and soldered to the bus bars 9 and 10, whereby a decorative electric lamp is connected directly into the terminal box. Suitable lugs 21, apertured as at 22, are provided for facilitating the securing of the terminal box to the trunk of the tree by tying the same by a decorative cord H thereto.

In Fig. 4 I have illustrated in diagrammatic form the bus bars 9 and 10 that are mounted within the terminal box and the electric conductors leading therefrom, forming the hookup for each individual set. The conductors 23 and 24 designate the line A leading from the plug or source of supply 25, shown in Fig. 1; likewise the conductors 26 and 27 by the branch B, 28 and 29 by the branch C, 30 and 31 by the branch D and 32 and 33 by the line E leading to the next set. The numeral 34 designates the various electric lamps that are provided on the different branches and on the terminal box. The said branches can be of any suitable length and strung around the

tree in any suitable manner. The reference character F designates the tree as a whole and G the trunk thereof.

From the foregoing description taken in conjunction with the accompanying drawing it will be obvious that the said lighting set can be built up to suit various sizes of trees and yet limited to prevent any overloading in the entire system and that the improved economically constructed terminal box associated with the improved method of connecting, arranging and extending the electric conductors therefrom provides an unusually novel and superior construction in the art to which the invention appertains.

It is to be understood that the form of my invention herewith shown and described is to be taken as a preferred example of the same and that various changes relative to the material, size, shape and arrangement of parts may be resorted to without departing from the spirit of the invention or the scope of the subjoined claim.

Having thus described my invention, I claim:

An electric lighting set of the character described for use in decorating a Christmas tree and including a terminal box molded from electric insulation material and embodying in its construction two substantially flat members, one of the said members being equipped with an electric lamp base capable of retaining an electric lamp, a plurality of pins capable of securing said members together, a cavity between said members, a pair of bus bars positioned into said cavity, means electrically connecting the bus bars to the said lamp base, a plurality of electric conductors soldered onto said bus bars and extending therefrom and forming electric lamp circuits therewith, a plurality of electric lamp bases connected in multiple relation in each of said circuits, said cavity being filled with electric sealing wax for sealing the terminal box and insulating said bus bars and electric conductors therein, and a plurality of apertured lugs fixed to the terminal box for facilitating the securing of the terminal box to the Christmas tree.

EDWARD E. MENDONCA.

REFERENCES CITED

The following references are of record in the file of this patent:

UNITED STATES PATENTS

Number	Name	Date
1,761,203	Fox	June 3, 1930
2,354,598	Janz	July 25, 1944