Nov. 28, 1950 F. C. ELDER ET AL 2,531,561

APPARATUS FOR CONTINUOUSLY COATING WIRE

Filed Feb. 18, 1948 2 Sheets-Sheet 1

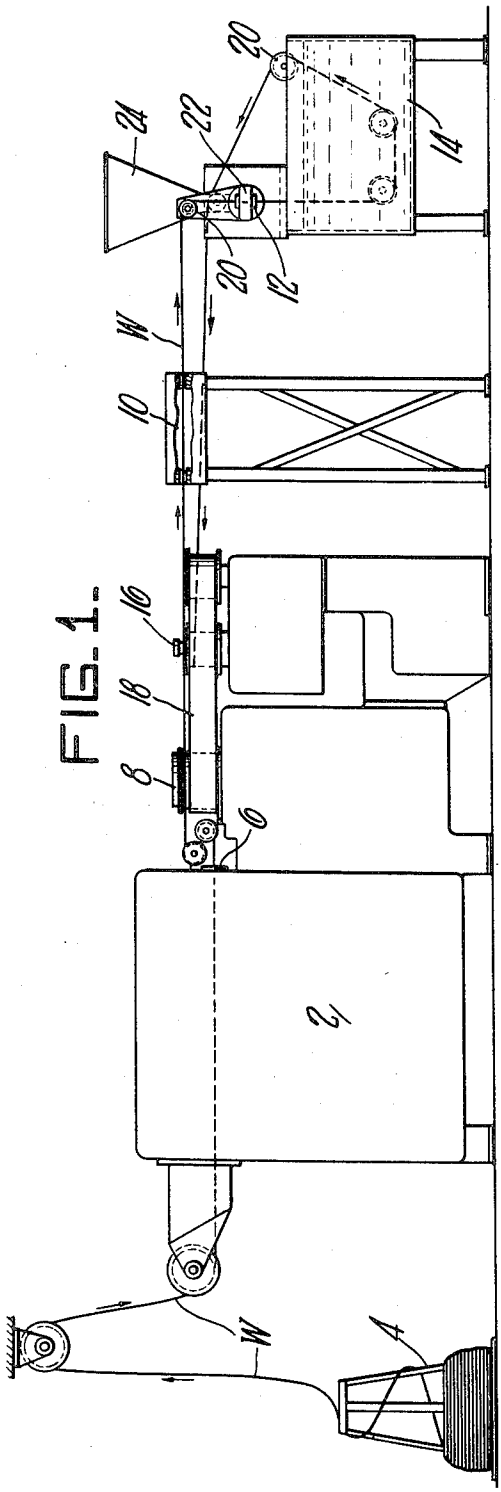

FIG. 1.

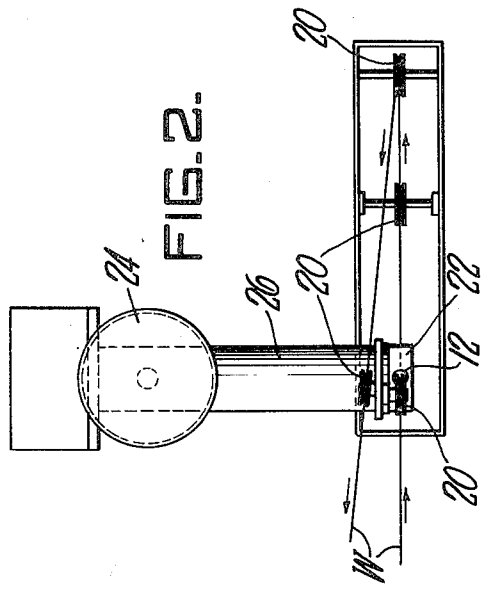

FIG. 2.

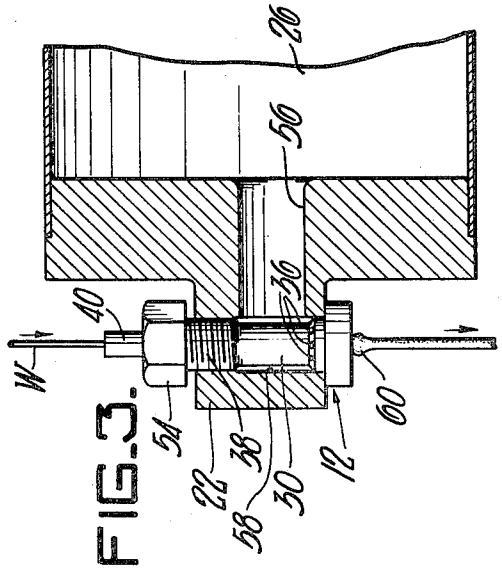

FIG. 3.

Inventors:
FLINT C. ELDER and
WILLIAM H. JOHNS,
by: Donald G. Dalton
their Attorney

Nov. 28, 1950 F. C. ELDER ET AL 2,531,561

APPARATUS FOR CONTINUOUSLY COATING WIRE

Filed Feb. 18, 1948 2 Sheets-Sheet 2

FIG. 4.

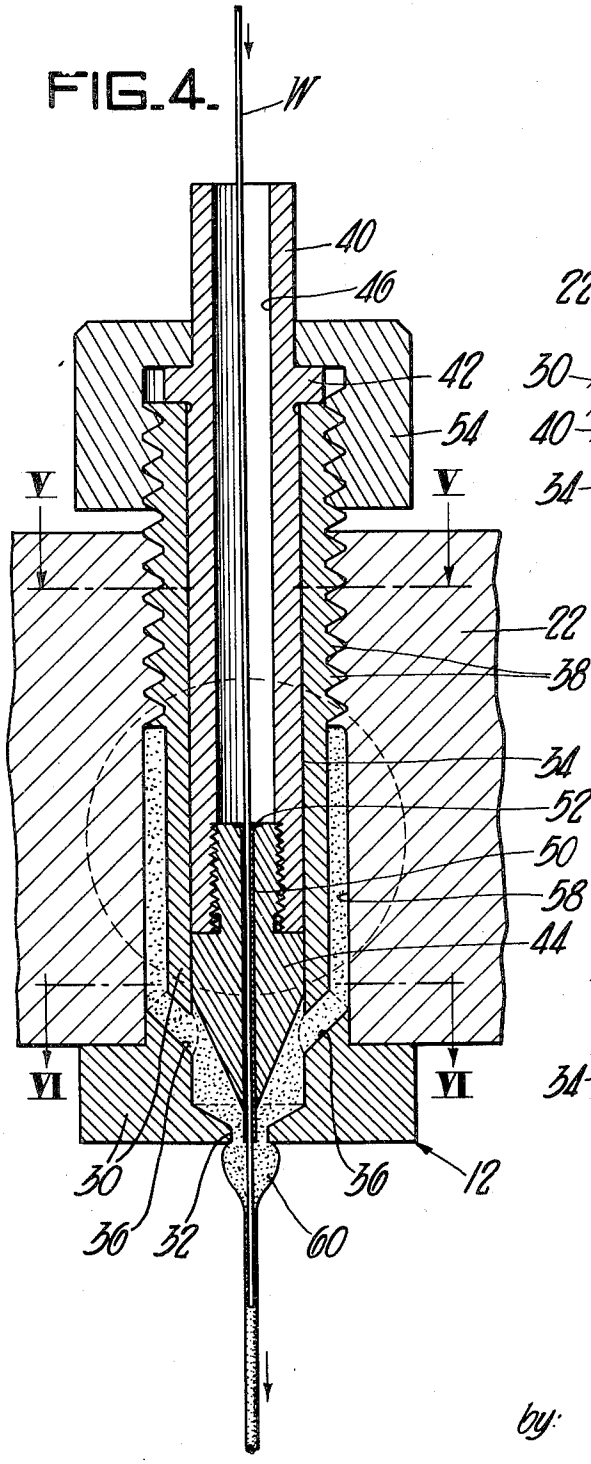

FIG. 5.

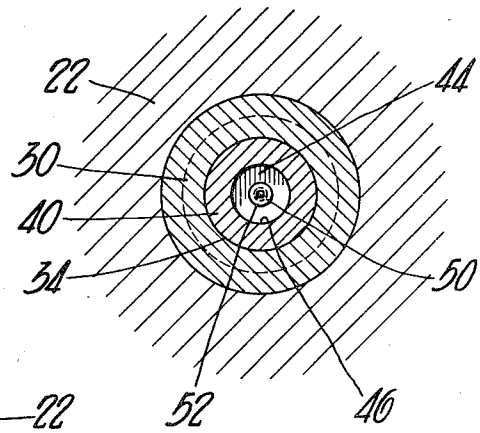

FIG. 6.

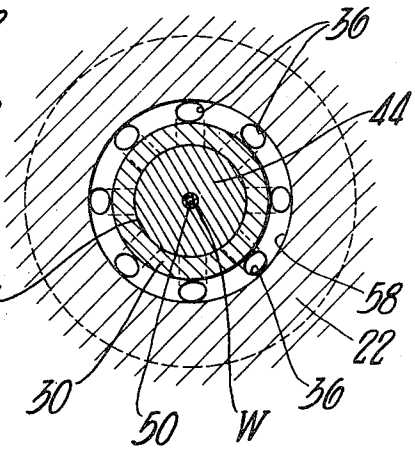

Inventors:
FLINT C. ELDER and
WILLIAM H. JOHNS,
by: Donald G. Dalton
their Attorney.

Patented Nov. 28, 1950 2,531,561

UNITED STATES PATENT OFFICE

2,531,561

APPARATUS FOR CONTINUOUSLY COATING WIRE

Flint C. Elder and William H. Johns, Cleveland Heights, Ohio, assignors to The American Steel and Wire Company of New Jersey, a corporation of New Jersey

Application February 18, 1948, Serial No. 9,038

5 Claims. (Cl. 91—30)

1

This invention relates to coating by extrusion processes of wire with coatings of various materials such as enamels, resin, lacquers or other plastic materials, and more particularly to guide means for holding the wire concentrically of the extrusion die while the coating material is applied at high speeds.

It is desirable in coating wire with such coatings to do so in conjunction with the regular wire processing apparatus to eliminate extra handling. However, in the case of final gages of wire the speed of delivery of the wire drawing machines is in the order of 1000 to 2000 feet per minute or higher which has heretofore involved difficulties with the means for guiding the wire through the extrusion die. The wire as it comes from the drawing machine has a slight deposit of lubricating and other foreign material thereon which is difficult to completely remove at such high speeds. This material tends to come loose from the wire in the guiding means and tends to collect therein. This results in the interior of the guide means becoming so small that passage of the wire therethrough is at first interfered with and finally results in breakage of the wire.

It is accordingly an object of the present invention to provide apparatus for coating wire which is suitable for use in conjunction with a high speed drawing machine.

It is a further object to provide a guide for an extrusion die which permits coating uncleaned wire at high speeds and at the same time closely guides the same into the extrusion die.

The foregoing and further objects will become apparent from the following specification when read in conjunction with the attached drawings, wherein:

Figure 1 is a schematic view of apparatus embodying the teaching of our invention;

Figure 2 is a plan of the extrusion press;

Figure 3 is a vertical view, partly in section, of the extrusion head;

Figure 4 is a vertical section of the extrusion die;

Figure 5 is a section on line V—V of Figure 4; and

Figure 6 is a section on line VI—VI of Figure 4.

Referring more particularly to the drawings, the numeral 2 designates a conventional wire drawing machine wherein a wire W is drawn from a reel 4 through a plurality of reducing dies including an exit die 6 which determines a final gage of the wire. The wire is drawn through

2

the wire drawing machine 2 which contains a bath of suitable lubricant and the exit die 6 by a pull-out block 8. In accordance with the teachings of our invention, the wire is led from the pull-out block 8 through a heater 10, through an extrusion die 12, a quenching tank 14 onto a take-up spool 16. If desired the coated wire may be coiled on a block mounted on the same spindle as the pull-out block 8 and having the same diameter. The take-up spool 16 is driven by a belt 18 which is driven by the pull-out block 8. Due to the engagement of the belt 18 with the spool 16, the wire is maintained at a desired tension in its passage from the pull-out block through the extrusion die 12 and quenching tank 14. Suitable free running sheaves 20 are provided to guide the wire through the heater 10, the extrusion die 12, the quench tank 14 and back through the spool 16.

The extrusion die 12 of our invention is mounted in a head 22 to which head plastic under suitable pressure is delivered from a hopper 24 through an extruder barrel 26. The extrusion die comprises a holding member 30 having a die opening 32 at its lower end and a cylindrical passage 34 therethrough. Suitable passages 36 are provided adjacent the lower end of the holding member for the passage of the coating material to the die opening 32. The holding member is mounted in the extrusion head by means of screw threads 38 at its upper end and extends through the extrusion head a short distance. A pin member 40 is disposed in the holder 30 and has a flange 42 adjacent its upper end which engages the upper end of the holder 32 to properly position the lower end of the pin member relative to the die opening. The lower end of the pin member is a separate tip portion 44 which is screw threadedly attached thereto. A bore 46 extends through the holder 30 and its tip 44. A guide member 50 comprising a short portion of tubing is disposed in the bore of the tip 44 and is held therein by a flange 52 engaging the upper end of the tip. The guide 50 extends forwardly from the tip 44 into the die opening 32 when the pin member 40 is properly disposed in the holder 30 and held therein by sleeve nut 54. The inner diameter of the tubular guide member 50 is suitably about .006" greater than the diameter of the wire to be drawn therethrough but at any rate the clearance should be no more than .01" for .010" diameter wire. Thus, it is seen that the wire is closely guided in its passage through the die opening 32.

A suitable passage 56 is provided for carrying

the plastic material from the barrel 26 to the annular space 58 between the holder 30 and the extrusion head 22 from which it is fed through the bores 36 into the space between the tip 44 and the forward end of the holder 30. Thus, it is seen that the amount of plastic extruded on the wire will depend on the correlation between the pressure at which the plastic is fed to the die opening and the speed of the wire as it is drawn therethrough. The plastic due to its heated and fluid condition tends to form a small globule around the wire as it emerges from the die as indicated at 60. However this quickly solidifies and forms a tight covering on the wire. The thickness of this covering will however vary dependent upon the speed of the wire which must be therefore closely controlled if a uniform coating is to be obtained. Since the wire is withdrawn at a uniform speed from the wire drawing machine, it is seen that this provides means for closely controlling the speed of the wire as it passes through the extrusion die.

As a result of the use of the short tubular guide 50, it is not necessary to clean the wire as it comes from the wire drawing machine. The length of this guide should be between 10 and 100 times the diameter of the wire but not greater than 1". The use of such a short guide is permitted by having the tip 44 of the pin holder separate from the body of the pin holder. Thus by mounting the tip 44 with a screw-threaded connection, it is possible to have a short guide member and at the same time securely hold the same from being drawn therethrough by frictional engagement with the wire.

In operation, wire W from the reel 4 is drawn through the wire drawing machine 2 and exit guide 6 by the pull-out block 8. In order to enable the block 8 to pull the wire through the wire drawing machine, the wire is preferably wound around the pull-out block one or two convolutions. The wire then passes through the heater 10 which dries any moisture remaining on the wire from the liquid lubricant used in the wire drawing machine. If desired the wire may be heated to a temperature which will be high enough when the wire reaches the extruding die to maintain the coating material at the exit end of the extruding die in a fluid state long enough to facilitate the free flow of the plastic into the tubular form in which it is applied to the wire. The temperature of the wire at the extruding die may preferably be substantially the same as the temperature of the coating material when in the fluid state. The wire is then drawn through the extrusion die 12, quench tank 14 and onto the spool 16 by the belt 18 which frictionally engages the wire as it is wrapped on the spool. From this it is seen that the wire is coated in connection with the regular wire drawing operation and in the condition in which it is delivered from the wire drawing machine. This is possible due to the special guide member of our invention. It is therefore not necessary to clean the wire in order to obtain a closely controlled concentric coating thereon. Such cleaning has heretofore involved a separate operation since the wire cannot be cleaned at the speed of 1000 to 2000 feet per minute or more at which it is delivered from the wire drawing machine in the case of the finer gages which it is desired to be coated.

While we have shown and described one specific embodiment of our invention, it will be understood that this embodiment is merely for the purpose of illustration and description and that various other forms may be devised within the scope of our invention, as defined in the appended claims.

We claim:

1. Apparatus for applying a plastic coating to rapidly moving, tensioned wire comprising an extrusion die adapted to surround the said moving wire, a guide tube in said die for guiding the wire therethrough, said guide being less than 1" in length and extending to the exit end of said die.

2. Apparatus for applying a plastic coating to rapidly moving, tensioned wire comprising an extrusion die adapted to surround the said moving wire, a tubular guide in said die for guiding the wire therethrough, the length of said guide being between 10 and 100 times the diameter of the wire drawn therethrough but not greater than 1" and extending to the exit end of the extrusion die and means for heating the wire prior to its passage through the extrusion die.

3. Apparatus for applying a plastic coating to rapidly moving, tensioned wire comprising an extrusion die assembly, a holding member in said die assembly, said member having a bore therethrough terminating in a die opening at the lower end thereof, a pin member mounted in the bore of said holding member, said pin member comprising a tubular body member having a flange at its upper end adapted to engage the upper end of said holding member, a tip removably mounted on the lower end of said tubular body member, said tip having a bore therethrough in alignment with the axis of said tubular body member, a guide tube mounted in said tip extending into the exit end of said die opening, said tube having a flange on its upper end adapted to engage the upper end of said tip to prevent the guide being drawn through said tip, the length of said tube being between 10 and 100 times the diameter of wire drawn therethrough but not greater than 1".

4. An extrusion die assembly for coating wire with plastic material at speeds in excess of 600 feet per minute comprising an extrusion head, a holding member mounted in said head, said member having a bore therethrough terminating in a die opening at the lower end thereof, a pin member mounted in the bore of said holder, said pin member comprising a tubular body member having a flange at its upper end adapted to engage the upper end of said holder, a tip removably mounted on the lower end of said tubular body member, said tip having a bore therethrough in alignment with the axis of said tubular body member and a guide tube secured in said tip extending therefrom into the exit end of said die opening.

5. An extrusion die assembly for coating wire with plastic material at speeds in excess of 600 feet per minute comprising an extrusion head, a holding member mounted in said head, said member having a bore therethrough terminating in a die opening at the lower end thereof, a pin member mounted in the bore of said holder, said pin member comprising a tubular body member having a flange at its upper end adapted to engage the upper end of said holder, a tip removably mounted on the lower end of said tubular body member, said tip having a bore therethrough in alignment with the axis of said tubular body member, a guide tube mounted in said tip extending into the exit end of said die opening, said tube having a flange on its upper end adapted

to engage the upper end of said tip to prevent the guide being drawn through said tip.

FLINT C. ELDER.
WILLIAM H. JOHNS.

REFERENCES CITED

The following references are of record in the file of this patent:

UNITED STATES PATENTS

Number	Name	Date
2,011,398	Dimmick	Aug. 13, 1935
2,185,701	Boyle	Jan. 2, 1940
2,263,246	Morgan	Nov. 18, 1941
2,341,731	MacGregor et al.	Feb. 15, 1944
2,366,528	Heath	Jan. 2, 1945
2,467,642	Wilson et al.	Apr. 19, 1949
2,471,752	Ingmanson	May 31, 1949