R. McCULLY.

Car-Registering Apparatus.

No. 200,073. **Patented Feb. 5, 1878.**

Fig. 1.

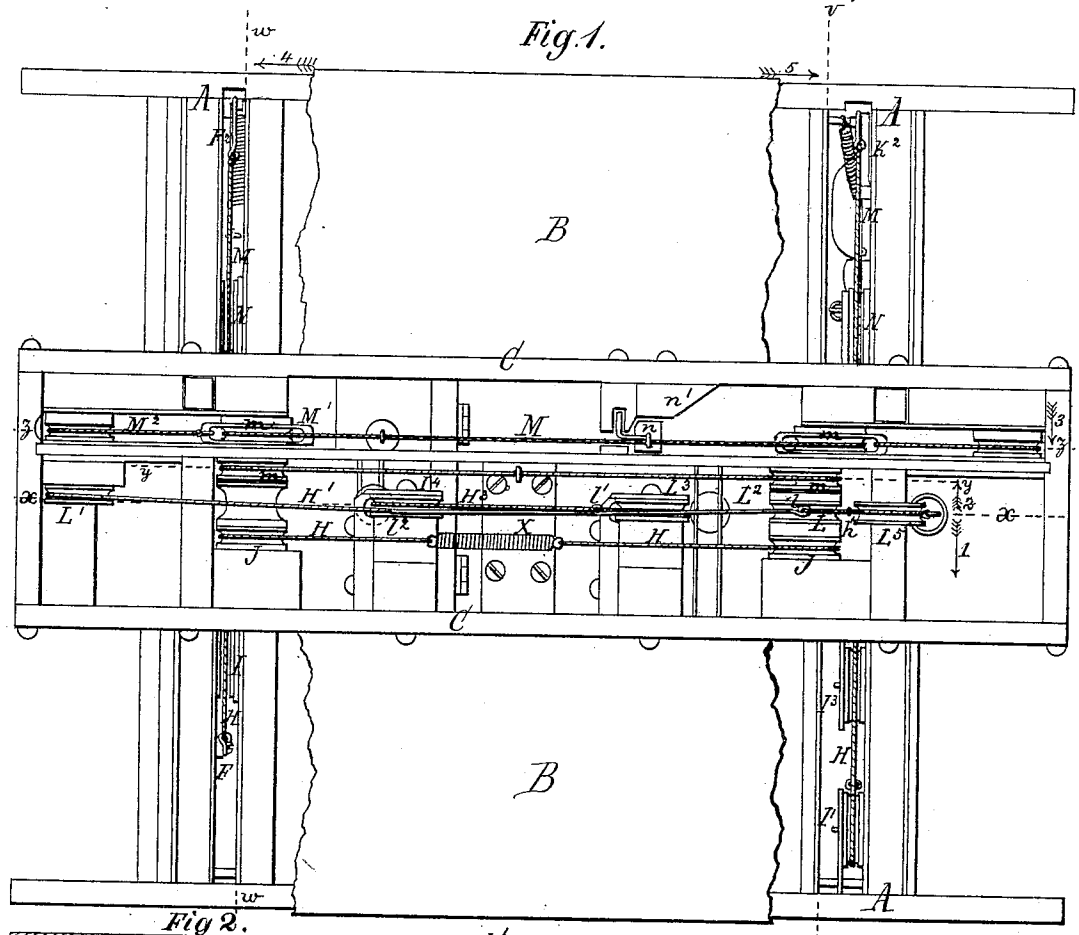

Fig 2.

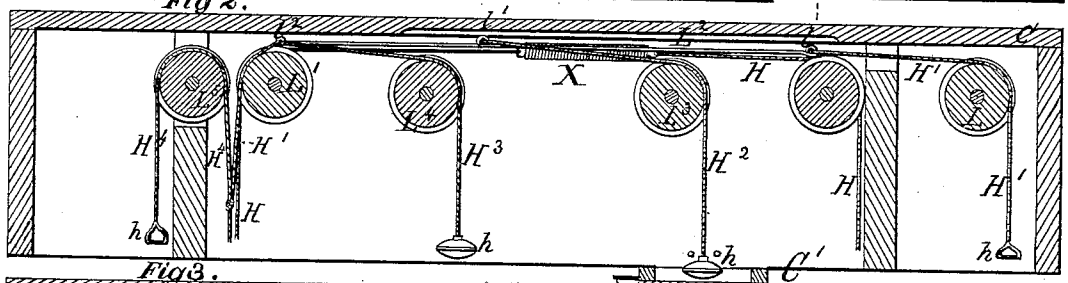

Fig 3.

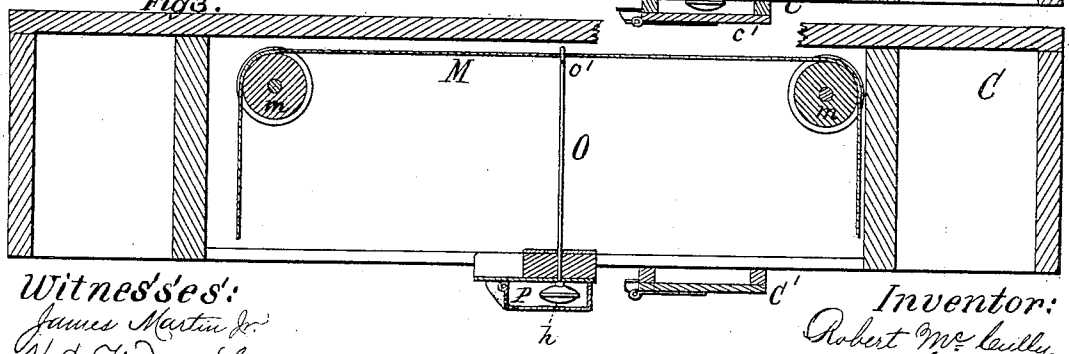

Witnesses:
James Martin Jr.
J. P. Theodore Lang.

Inventor:
Robert McCully,
by Mason, Fenwick & Lawrence

N. PETERS, PHOTO-LITHOGRAPHER, WASHINGTON, D. C.

R. McCULLY.
Car-Registering Apparatus.

No. 200,073. **Patented Feb. 5, 1878.**

Fig 4.

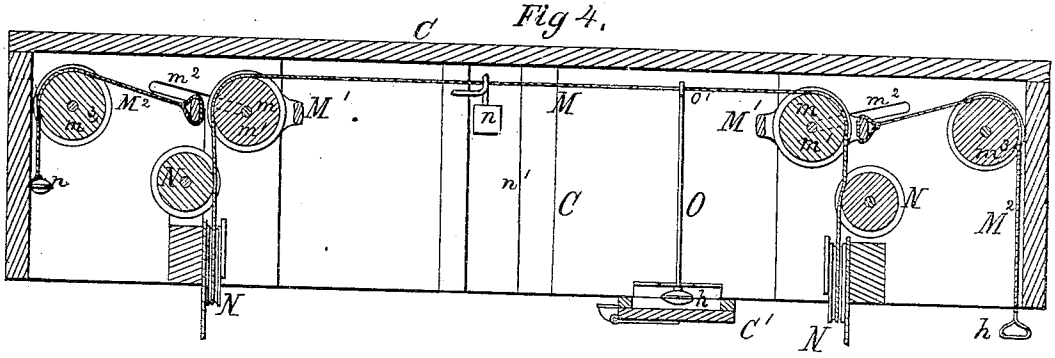

Fig 5.

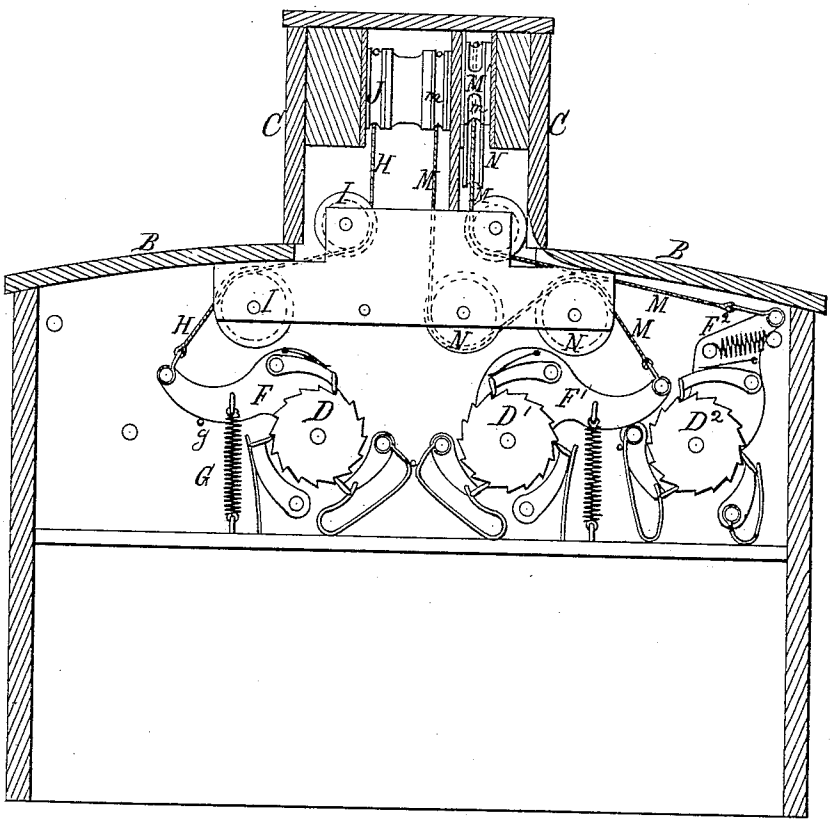

Witnesses:
James Martin Jr
J. P. Theodore Lang.

Inventor:
Robert McCully
by
Mason, Fenwick & Lawrence

N. PETERS, PHOTO-LITHOGRAPHER, WASHINGTON, D. C.

R. McCULLY.

Car-Registering Apparatus.

No. 200,073. Patented Feb. 5, 1878.

Fig 6.

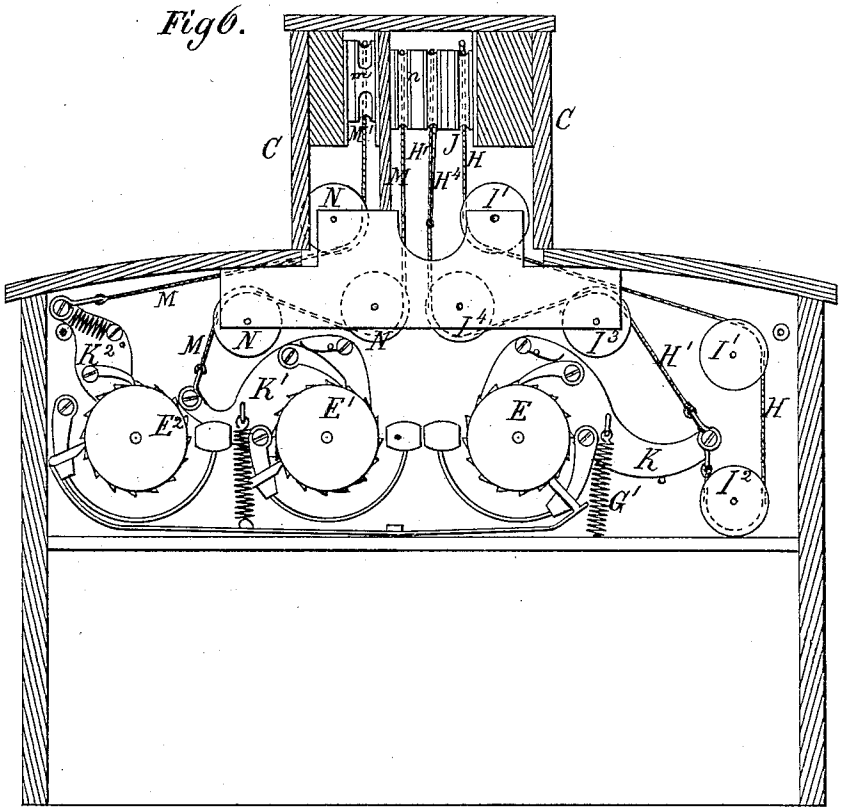

Fig 7.

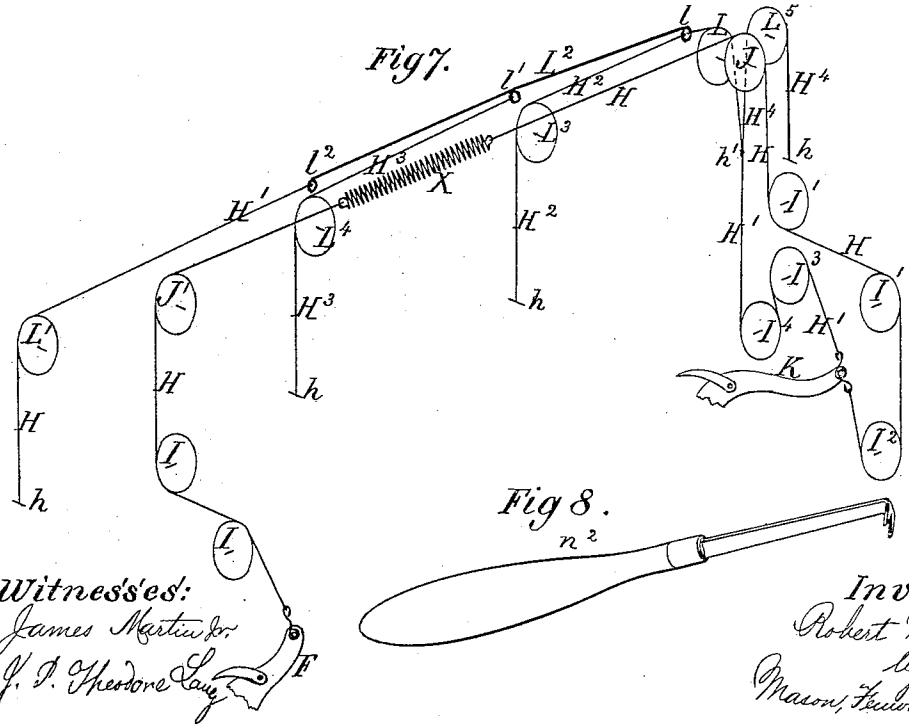

Fig 8.

Witnesses:
James Martin Jr.
J. T. Theodore Lay

Inventor:
Robert McCully
by
Mason, Fenwick & Lawrence

N. PETERS, PHOTO-LITHOGRAPHER, WASHINGTON, D. C.

UNITED STATES PATENT OFFICE.

ROBERT McCULLY, OF PHILADELPHIA, PENNSYLVANIA.

IMPROVEMENT IN CAR REGISTERING APPARATUS.

Specification forming part of Letters Patent No. **200,073**, dated February 5, 1878; application filed May 7, 1877.

To all whom it may concern:

Be it known that I, ROBERT McCULLY, of the city and county of Philadelphia, and State of Pennsylvania, have invented certain new and useful Improvements in Car Registering Apparatus; and I do hereby declare that the following is a full, clear, and exact description of the same, reference being had to the accompanying drawings, making part of this specification, in which—

Figure 1 is a top view of a car to which my improvements are adapted, and of which, for the purpose of full exhibition of said improvements, a greater portion of the roof has been removed. Fig. 2 is a vertical longitudinal section through the top part of the car, and in the line *x x* of Fig. 1, the view being taken in the direction of an arrow, 1. Fig. 3 is a similar section, indicated by line *y y* in Fig. 1 and an arrow, 2. Fig. 4 is a similar section, indicated by line *z z* in Fig. 1, and looking in the direction of an arrow, 3. Fig. 5 is a vertical transverse section of the car indicated in Fig. 1 by line *w w*, and looking in the direction of arrow 4. Fig. 6 is a vertical transverse section of the car indicated in Fig. 1 by line *v v*, and looking in the direction of an arrow, 5. Fig. 7 is a perspective diagram, showing the arrangement of cords and pulleys. Fig. 8 is a perspective view of an operating-hook in connection with a tension-spring.

The nature of my invention consists in certain constructions, combinations, and arrangements of parts, hereinafter fully described and specifically claimed, whereby an operating mechanism for registering fares in cars or other vehicles is produced which is less expensive than other mechanisms for the same purpose, less liable to get out of repair, and easier to operate, and which can be operated by cords arranged upon pulleys and actuated by pendent knobs.

In the drawings, A represents the upper part of a car-body; B, the car-roof, and C a longitudinal casing placed upon the ridge, and containing the main part of the operating mechanism. D D^1 D^2, Fig. 5, are ratchet-wheels of registering apparatuses, and E E^1 E^2, Fig. 6, are ratchet-wheels of registering and alarm apparatuses, here represented as being next to each other; but this is not an arrangement of necessity, as I intend to have the said registering and alarm mechanisms arranged in different places of the car, where they may be most conveniently inspected by all passengers.

The operating-lever F of the ratchet D is kept in its normal position by a tension-spring, G, and a steady-pin, *g*, as seen in Fig. 5, and is operated by a cord, wire, or chain, H, which, after passing around a number of guide-pulleys, I, passes over two main pulleys, J J′, thence over the guide-pulleys I^1 I^2 to the operating-lever K of the ratchet E. Another cord or chain, H^1, joins the lever K, and runs in a direction opposite to that of the cord H, over guide-pulleys I^3 I^4, up to a pulley, L, and thence to another pulley, L^1, near the opposite end of the car. Between the pulleys J J′ the cord H is provided with a tension-spring, K. Between the pulleys L L^1 the cord H^1 is provided with a pulling-rod, L^2, having eyes *l* l^1 l^2, to the extreme ones, *l* and l^2, of which the cord H^1 is fastened. To the eye *l* another cord, H^2, is fastened, which passes over a guide-pulley, L^3, into the car below near the ceiling, and is there provided with a button or handle, *h*, for the convenience of the operator. To the middle eye l^1 a cord, H^3, is fastened, which runs over a guide-pulley, L^4, into the car, and is there provided with a button, *h*, all of similar construction, and for the same purpose as the cord H^2 and its connections. The part of the cord H^1 which is fastened to the eye l^2 extends to the platform of the car, and there passes over a guide-pulley, L^1, and has a button, *h*, at its lower termination. The opposite platform of the car is provided with a cord, H^4, and a button, *h*, the former passing over a guide-pulley, L^5, and joining the cord H^1 at *h′*, as seen in Fig. 7. By the said construction the car has an operating-button, *h*, at each platform, and one at each end inside of the car, and the number of the said buttons may easily be increased to meet the requirements of the operator by the means described.

By the arrangement of the pulleys I^2 I^3, having the lever K between them, two objects are gained: first, a connection is formed with the return-cord H, whereby the indicator and gong

on one end and the indicator on the other end of the car are simultaneously and conjointly operated, the pulleys I^2 I^3 effecting the reversion of motion between the cords H H^1 necessary for the operation of the mechanisms at opposite ends of the car; and, second, the tension of the cord H is applied to both simultaneously-operated levers, and thus prevents imperfect operation by slackness of the cord. The tension of the spring K must be such as not to be overcome by the tension of the spring G on the lever F, for reasons easily seen.

By making the cord H a little short the multiplying-register on the opposite side or end from the gong will be operated in advance of the gong, whereby the gong serves the double purpose of indicating the receipt of a fare and the prompt registration of the same.

The use of a tension-spring, X, as described, is not absolutely necessary for the successful operation of my improved register and alarm-gong motion; but it is very useful and desirable, for the reasons above stated.

The described register and alarm-gong motion has one great advantage over other motions, consisting mainly of oscillating rods with hand-levers, which is this, that the registering and alarm-gong mechanisms may be arranged altogether at pleasure in any parts of the car, while, when oscillating rods are used to operate them, the said mechanisms must be in line with them.

In Fig. 2 I have shown a case, C′, wherein the button *h* of the cord H^2 is inclosed. The said case C′ has a movable lid, *c*′, which may be locked or otherwise secured, so that only an authorized person may open the said case C′, and operate the button therein.

I may either protect each single button or all of them together, or groups of them, by similar means.

I have shown a modification wherein an operating-cord, M, Figs. 1, 3, 5, and 6, is supported by two pulleys, *m*, which are suitably located in the casing C. The said cord M is passed over suitable guide-pulleys N near each end, and is finally fastened to the ratchet-levers F^1, Fig. 5, of a multiplying-register, and K^1, Fig. 6, of an alarm-gong. In this case the cord M pulls in two opposite directions, by being operated midway of its tension by means of a pulling-rod, O, with a button, *h*, and an eye, *o*′, which encircles the cord M, and may easily slide over it.

Figs. 1, 3, 5, and 6 fully illustrate the described modification.

The lower part of the rod O and the button *h* may be inclosed by a movable case, P, accessible only to the car-conductor by means of lock or otherwise, the said case P being made to slide between suitable bearings from end to end of the car, so the conductor may always move the case P and rod O to the most convenient place for operation.

Another modification, resembling that just described, is shown in Figs. 1, 4, 5, and 6, where a cord, M, is stretched over two pulleys, *m*, within moving blocks M^1. The center shafts m^1 of the pulleys *m* are extended through and beyond the inclosing blocks, and fitted into slots m^2 in the walls of the casing C, and the shafts m^1 are kept at the near ends of the slots m^2 by means of the tension of the cord M, which is fastened to the operating-lever F^2 of the multiplying-register and the operating-lever K^2 of the alarm mechanism. The operator's pulling-cords M^2 are fastened to the blocks M^1, and pass around stationary guide-pulleys m^3, in line with the slots m^2. There may be one or more stationary or movable pulling cords or rods between the pulleys *m*, for special convenience.

About midway between the blocks M^1 a vertically-guided button, *n*, is loosely attached to the cord M, in close proximity to the same, so that the operator has to reach and pull it by means of a hook, n^2, as represented in Fig. 8. By means of a block, n^1, with inclined surface, (seen in Figs. 1 and 4,) the said hook n^2 is guided right toward the button *n*, so that the operator may hit the button at once with the hook without feeling his way carefully toward it. The button *n* of one of the cords M^2 is also shown so far above the roof of the car as to be beyond reach, and, therefore, must also be operated with the hook n^2, which may be guided by similar means, to facilitate the operation of the button.

With my improved operating mechanism I am enabled to provide a car with a greater number of fare-registers and alarms than with any other operating mechanism known and used at the present time.

The relative locations of the resistering and alarm mechanisms do not interfere with the facility of their operation, as the intermediate operating parts which connect the said mechanisms afford conveniences for operating the same, and they are of so simple construction that necessary changes or repairs can be effected in very short time and with small expense.

Having described my invention, what I claim as new, and desire to secure by Letters Patent, is—

1. In a car or other vehicle, the combination of an alarm-gong and fare-registering mechanisms, and a mechanism for operating the same, consisting of a main reverse or double acting cord applied upon pulleys, and provided with appropriate pendants, whereby, with one pull of the operator's hand on either of the pendants, the said alarm-gong and fare-registering mechanisms, at different parts of the car, are simultaneously operated, substantially as set forth.

2. The case C upon the car-ridge, containing the main operating-cords and the parts instrumental for operating the said main cords by hand, substantially as set forth.

3. In a car or other vehicle, the combination of an alarm-gong and fare-registering mechanisms with an operating double or reverse acting main cord, having a number of hand or

pulling cords, as at H^1 H^2 H^3 H^4, conveniently distributed both within and without the car, substantially as set forth.

4. In a car or other vehicle, the combination of two or more sets of alarm and fare-registering mechanisms for the indication and registration of fares of different character and value, and an operating mechanism consisting of two or more main reverse or double acting cords, having appropriately and relatively located pendants for simultaneously operating any one of said sets of mechanism from any one place in the said car, substantially as set forth.

5. In a car provided with fare-registering and alarm-gong mechanisms, the combination of the cords H H^1, guide-pulleys I^2 I^3, and levers F K, substantially as set forth.

6. The combination of the cord M, the levers F^1 K^1, and the movable pulling-rod O, substantially as set forth.

7. The sliding case P, inclosing the lower extremity of the pulling-rod O, substantially as set forth.

8. The case P, or its equivalent, for protecting the operating button or buttons *h*, substantially as set forth.

Witness my hand, in the matter of my application for a patent for an improved car registering apparatus, this 23d day of April, A. D. 1877.

ROBERT McCULLY.

Witnesses:
WM. M. McKNIGHT,
CHAS. LUKENS.