2 Sheets—Sheet 1.

J. DUSCH & H. LEWIS.

BAND-CUTTING FEEDERS FOR THRASHING-MACHINES.

No. 194,339. Patented Aug. 21, 1877.

Fig. 1.

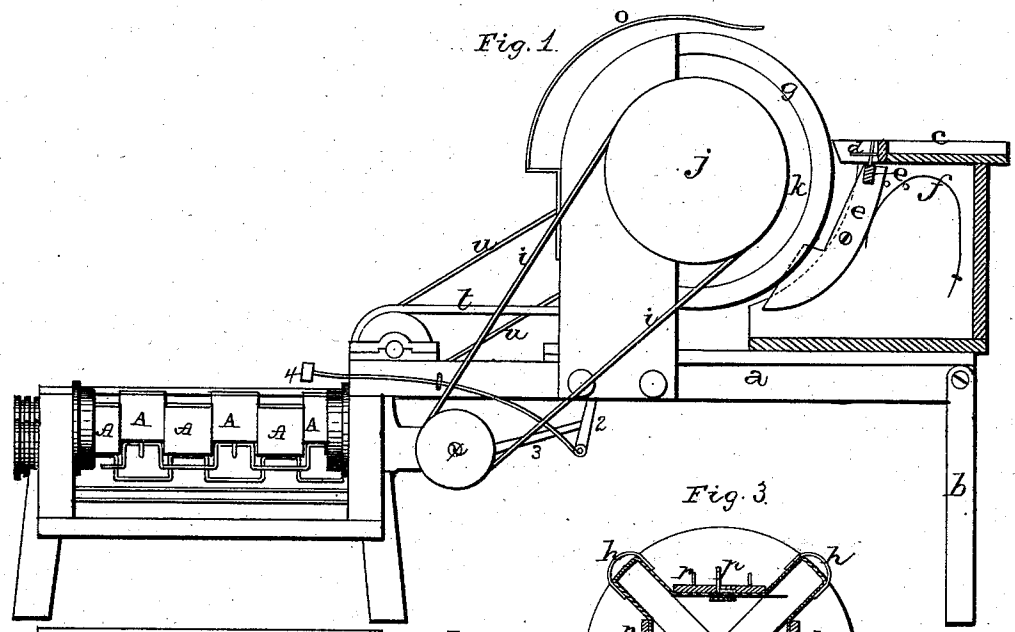

Fig. 3.

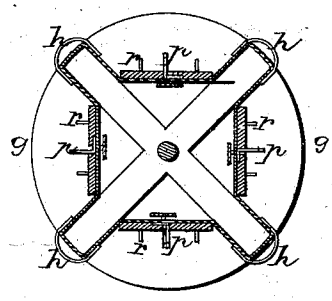

Fig. 2.

WITNESSES

J. Wm. Garner.

Will H. Kerr.

INVENTORS.

Jno. Dusch.

Henry Lewis.

per

F. A. Lehmann,

atty.

N. PETERS. PHOTO-LITHOGRAPHER, WASHINGTON, D. C.

2 Sheets—Sheet 2.

J. DUSCH & H. LEWIS.

BAND-CUTTING FEEDERS FOR THRASHING-MACHINES.

No. 194,339. Patented Aug. 21, 1877.

Fig. 4

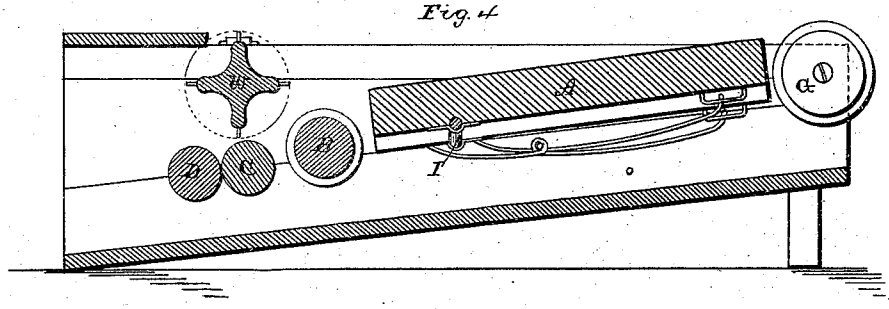

Fig. 5.

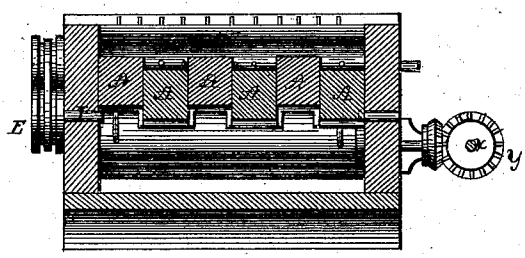

Fig. 6.

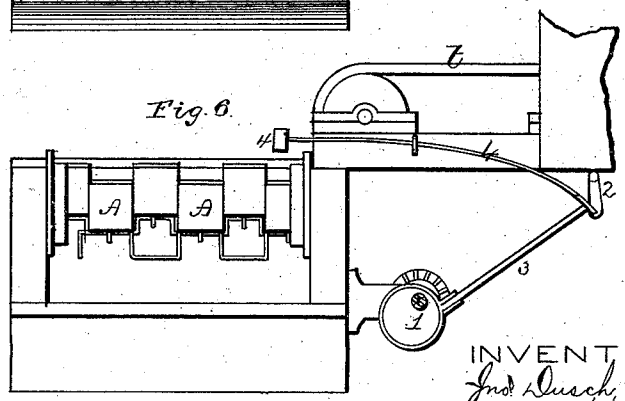

WITNESSES

J. Wm. Garner.

W. S. O. Baines.

INVENTORS.

Jno. Dusch,
Henry Lewis.
per,
F. A. Lehmann,
Atty.

N. PETERS, PHOTO-LITHOGRAPHER, WASHINGTON, D. C.

UNITED STATES PATENT OFFICE.

JOHN DUSCH AND HENRY LEWIS, OF BAY CITY, ILLINOIS.

IMPROVEMENT IN BAND-CUTTING FEEDERS FOR THRASHING-MACHINES.

Specification forming part of Letters Patent No. **194,339**, dated August 21, 1877; application filed July 25, 1877.

To all whom it may concern:

Be it known that we, JOHN DUSCH and HENRY LEWIS, of Bay City, in the county of Pope and State of Illinois, have invented certain new and useful Improvements in Band-Cutters for Thrashing-Machines; and we do hereby declare the following to be a full, clear, and exact description of the invention, such as will enable others skilled in the art to which it pertains to make and use it, reference being had to the accompanying drawings, which form part of this specification.

Our invention relates to an improvement in band-cutters for thrashing-machines; and it consists in the arrangement and combination of parts that will be more fully described hereinafter, whereby the bands of bundles are cut, the grain fed forward to the feeding attachment of the thrasher, and scattered over the surface of the feeding device.

The accompanying drawings represent our invention.

Figure 1 is a side elevation of our invention. Fig. 2 is a plan view of the same. Fig. 3 is a vertical cross-section of the reel. Figs. 4, 5, and 6 are detail views.

a represents a suitable frame, which is supported at one end by the legs *b*, and at the other by the feeding attachment of the thrashing-machine. At the outer end of the frame is a platform, *c*, upon which the bundles are piled. Projecting inwardly from the edge of this platform are a number of rods or bars, *d*, upon which a bundle is taken from the platform and laid on their tops. Pivoted to the inside of the frame, below the level of the platform, is a rake, *e*, which has teeth projecting from its upper surface, and which teeth project up through the projections on the inner edge of the platform. The lower ends of the levers, which form a part of this rake, have their lower ends pressed forward against the edge of the revolving reel by means of a spring, *f*, and the upper end is made to press backward against the inner edge of the platform. As the reel *g* revolves around, the cams *h*, arranged at equal distances around one end, press against the lower ends of the levers of the rake, and thereby force the lower ends backward and the upper ends forward.

In each of the sides of the revolving reel *g* is made a number of recesses, of suitable length and size to receive the largest or the smallest bundle of grain. As the bundles are taken from the platform they are laid upon the top of the projections *d*, in front of the teeth of the rake. As the upper end of the rake is thrown forward by the actions of the cams *h* the bundle which has been placed in front of it is swept forward into one of the recesses in the revolving reel *g*.

It will be seen that the action of the rake is so timed as to correspond with the recesses as they come opposite to it. The reel is made to revolve by a belt, *i*, from the driving-shaft, passing up over the large pulley *j*. Rigidly secured to an upright on the edge of the frame, just inside of this driving-pulley *j*, is a large circular disk, *k*, which is provided with teeth or cogs upon its inner side for about one-half of its circumference.

Projecting outward from the inner edge of the reel are two bearings, *l*, between which are journaled the short shafts *s*, which have the pinions *m* for gearing with the teeth on the side of the disk secured to their upper ends, and the small cranks *n* formed upon their lower ends. Attached to these cranks are the short connecting-rods Q, which have their inner ends fastened to the reciprocating serrated band-cutters *p*, the upper edges of which project up above the bottoms of the recesses in the revolving reel *g*; also, extending above the bottoms of these recesses are a number of pins or projections, *r*, which catch in the bundles, and serve to prevent them from being moved back and forth with the cutters *p*.

As the bundles are thrown by the rake into the recesses and the reel revolves slightly forward, the bundles pass under the spring *o*, which holds them down in position while the cutters cut the bands. Instead of there being single cutters, as shown in some of the recesses, there may be, if so desired, two cutters which move in opposite directions, so as to make perfectly sure that the band or tie around the bundle, whether made of wire or straw, will be cut.

After the bands have been cut the reel turns around far enough to empty the straw out of the recess upon the endless belt *t*, which is driven by a band or belt, *u*, from a pulley, *v*,

upon the end of the reel *g*. The endless belt carries the straw forward and deposits it upon the top of the feeding-bars, which carry it forward to the toothed reel *w*.

Upon the driving-shaft *x*, which is journaled upon the sides of the feeding attachment to the thrashing-machine, are placed suitable wheels *y*, for operating the feeding devices, and also an eccentric, 1, which causes the shaft 2, journaled on the under side of the frame *a*, to rock back and forth. The ends of this shaft 2 are cranked. To these cranked ends are attached the connecting-rods 3, which operate the rake 4 for scattering the grain over the surface of the feeding attachment as fast as the grain is deposited by the endless belt upon it. This feeding attachment consists of a number of slats or bars, A, which are divided into two sets, each one of which is connected at both ends to cranks or eccentrics, as shown. These cranks or eccentrics are so formed that while one set of the slats or bars A is raised upward, and is moving toward the forward end of the attachment, carrying the straw with it, the other set is lowered and is moving backward. The two sets, thus alternately moving back and forth, carry forward the straw as fast as it is emptied from the reel upon the top of the three rollers B C D.

The roller B is made to revolve by the operating-shaft *x*, and from a pulley, E, on the outer end of the shaft I, is passed a belt, F, which revolves the toothed reel *w*. The toothed reel serves as a governor to regulate the feed of the straw forward, and is made adjustable vertically, so as to accommodate itself to light or heavy feed.

To the upper end of this feeding attachment are fastened the two pulleys, G, around which pass two belts, provided with small slats that reach across the surface of the feeder, and thence passing over the same to and over the first roller.

Having thus described our invention, we claim—

1. The combination of a platform, *c*, a rake, and a revolving reel having recesses or pockets in its sides, the rake being adapted to throw the bundle into the recesses or pockets, substantially as shown.

2. A revolving reel having recesses in its sides, and cutters made to reciprocate back and forth therein, so as to cut the bands of the bundles, substantially as described.

3. In combination with the revolving reel, having recesses or pockets in its sides, the cutters moving back and forth therein, and a holding-spring for keeping the bundles pressed down upon the cutters, substantially as set forth.

4. The combination of a revolving reel, the disk *k*, having teeth upon a portion of its surface, the shafts *s*, carrying the pinions *m*, and cranks *n* for operating the cutters, substantially as specified.

5. The combination of a reel, *g*, provided with cutters for cutting the bands, an endless apron for catching the straw and feeding it forward, and a rake for scattering the straw over the surface of the slats A, substantially as shown.

6. The combination of the feeding-slats A, the rollers B C D, and the toothed reel *w*, the reel serving as a regulator, substantially as set forth.

In testimony that we claim the foregoing we have hereunto set our hands this 12th day of July, 1877.

JOHN DUSCH.
HENRY LEWIS.

Witnesses:
JAMES WALKER,
THOS. E. LEWIS.