H. S. MARSH AND R. S. COCHRAN.

APPARATUS FOR PICKLING METAL ARTICLES.

APPLICATION FILED OCT. 12, 1920.

1,392,781. Patented Oct. 4, 1921.

4 SHEETS—SHEET 1.

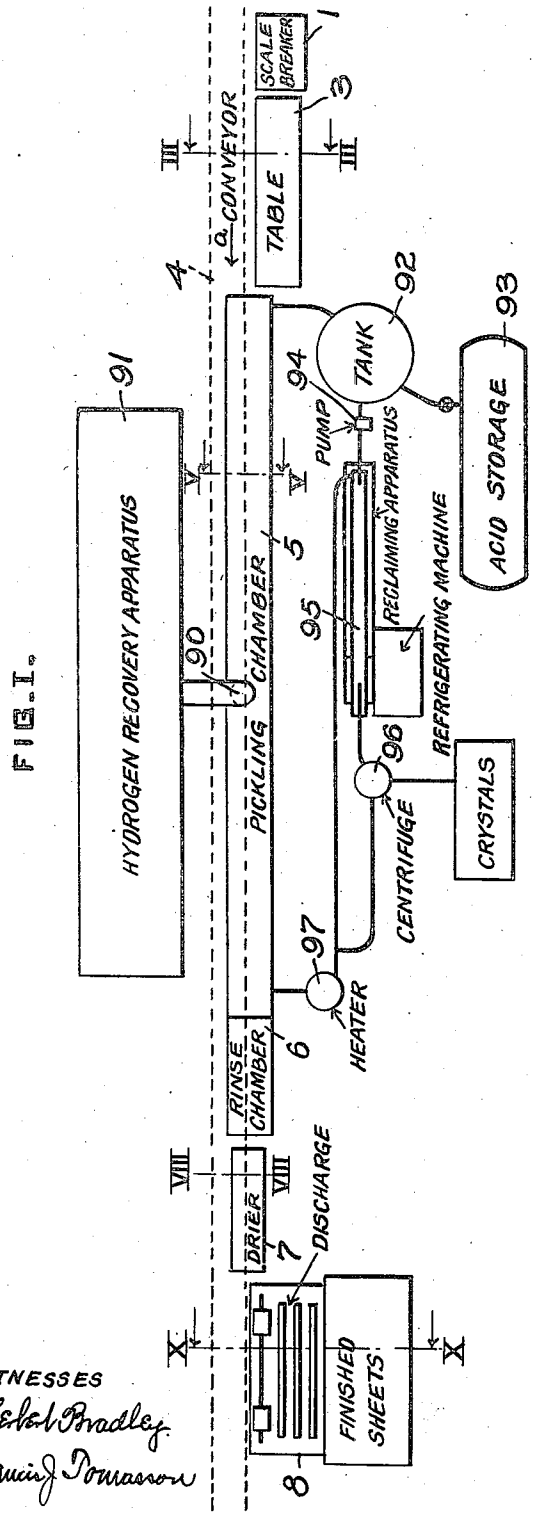

FIG. I.

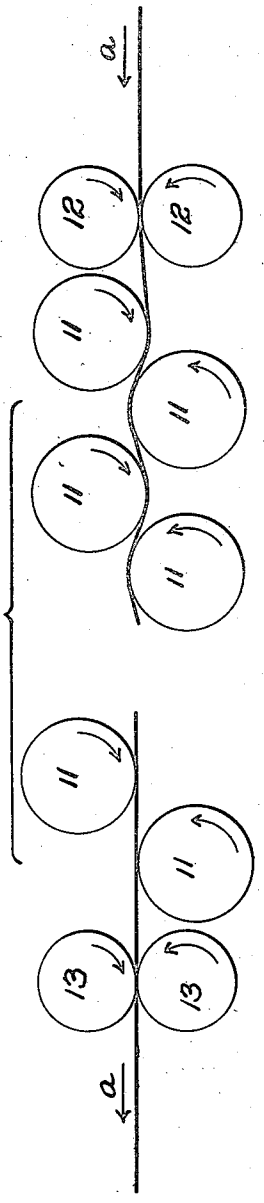

FIG. II.

WITNESSES

J. Herbert Bradley

Francis Donaldson

INVENTORS

Henry S. Marsh

Ralf S. Cochran

by Christy and Christy

their attorneys

H. S. MARSH AND R. S. COCHRAN.

APPARATUS FOR PICKLING METAL ARTICLES.

APPLICATION FILED OCT. 12, 1920.

1,392,781. Patented Oct. 4, 1921.

4 SHEETS—SHEET 2.

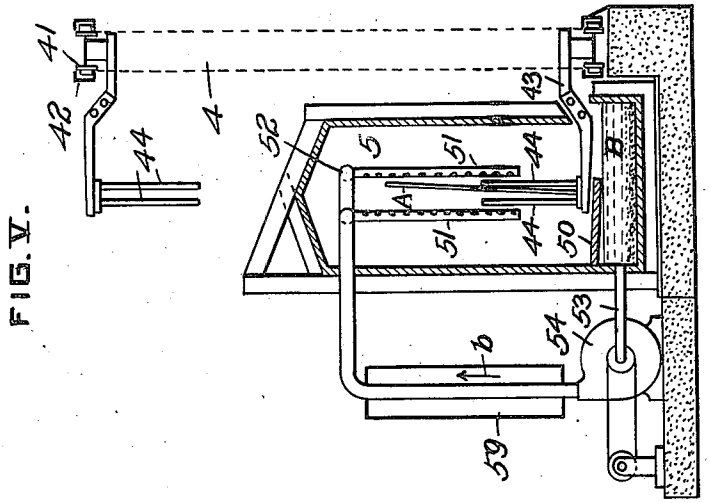

FIG. V.

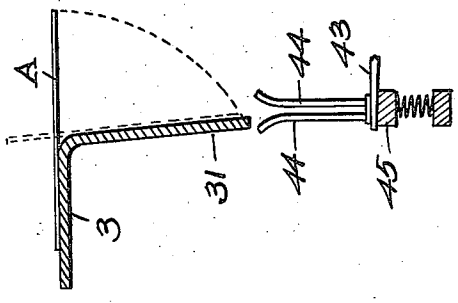

FIG. III.

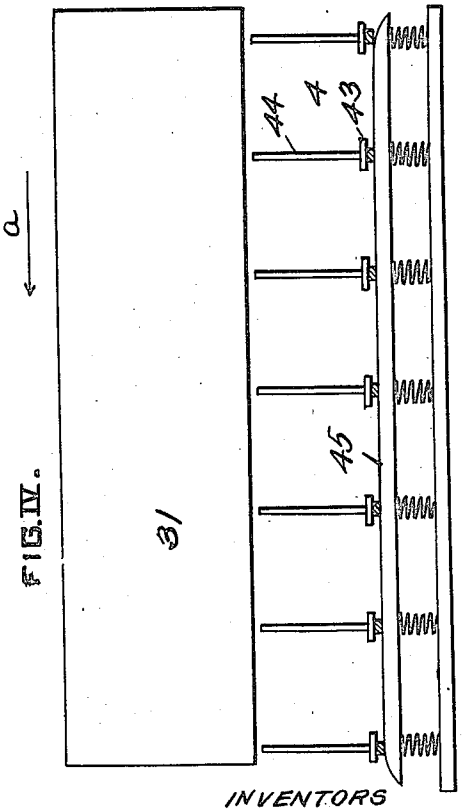

FIG. IV.

WITNESSES

J. Herbert Bradley.

Francis J. Dumasson

INVENTORS

Henry S. Marsh
Ralf S. Cochran
by Christy and Christy
their attorneys

H. S. MARSH AND R. S. COCHRAN.

APPARATUS FOR PICKLING METAL ARTICLES.

APPLICATION FILED OCT. 12, 1920.

1,392,781.

Patented Oct. 4, 1921.

4 SHEETS—SHEET 3.

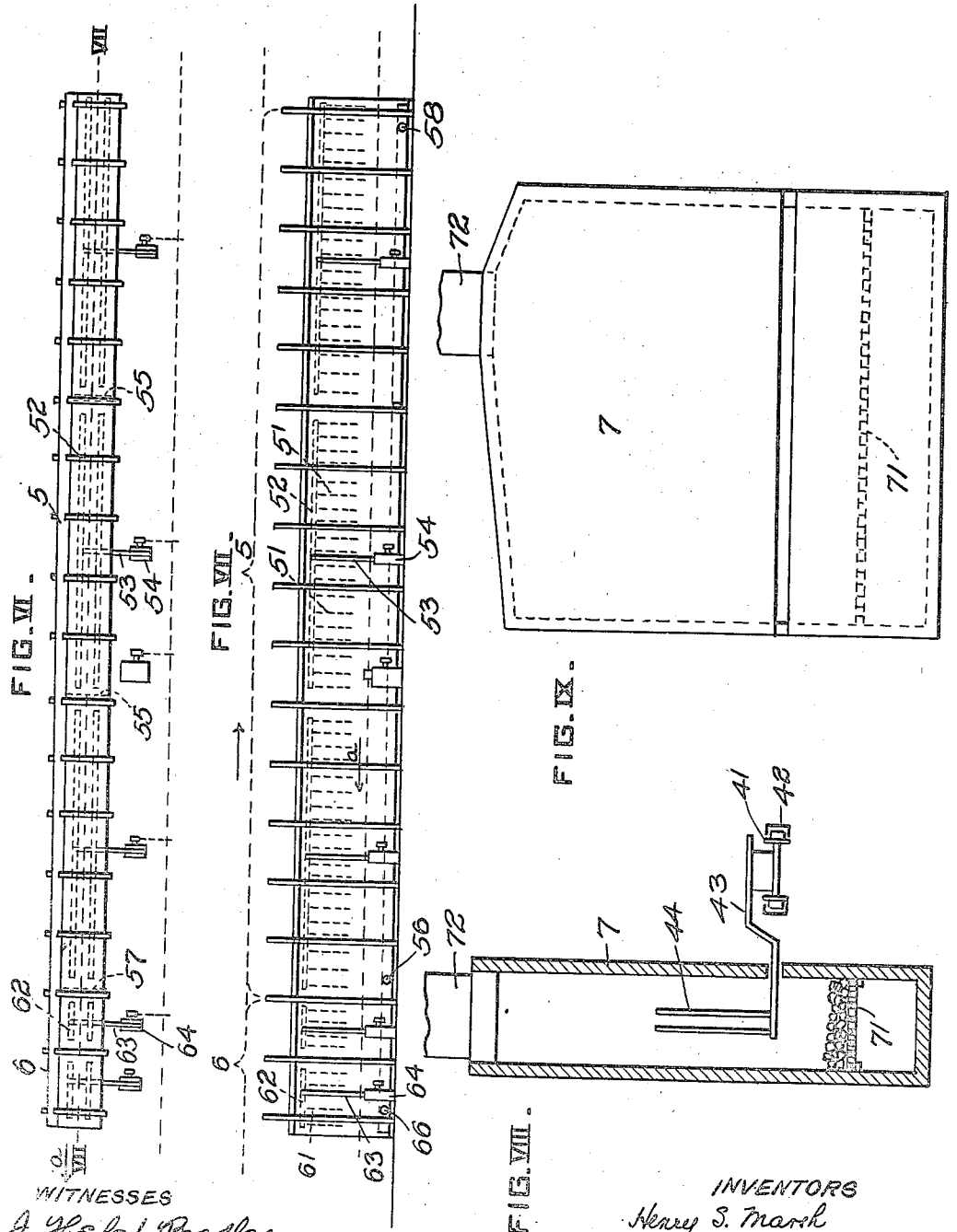

WITNESSES

J. Herbert Bradley.

Francis J. Donahoe

INVENTORS

Henry S. Marsh

Ralf S. Cochran

by Christy and Christy

their attorneys

H. S. MARSH AND R. S. COCHRAN.

APPARATUS FOR PICKLING METAL ARTICLES.

APPLICATION FILED OCT. 12, 1920.

1,392,781.

Patented Oct. 4, 1921.

4 SHEETS—SHEET 4.

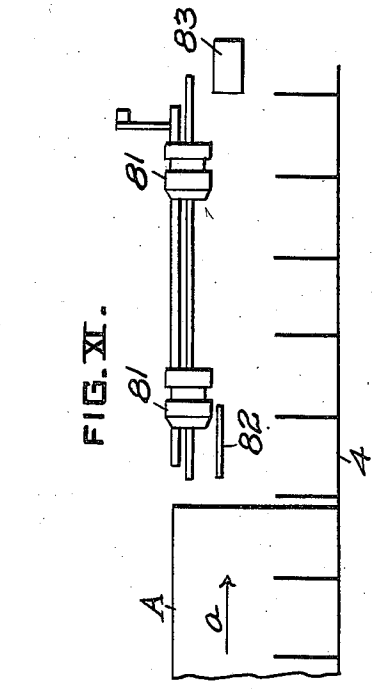

FIG. XI.

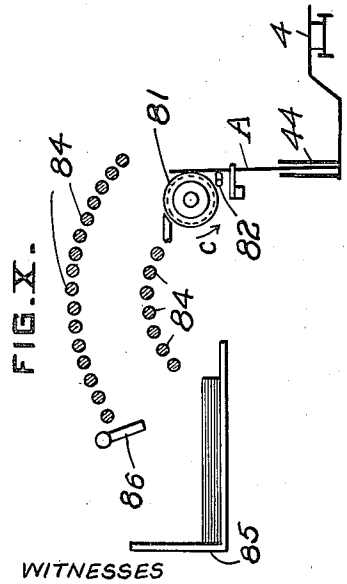

FIG. X.

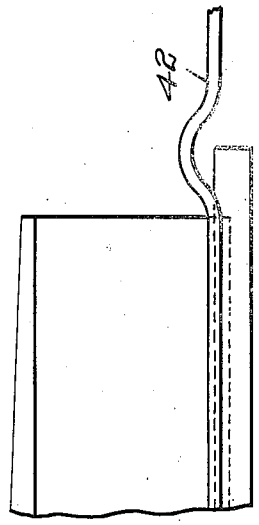

FIG. XIV.

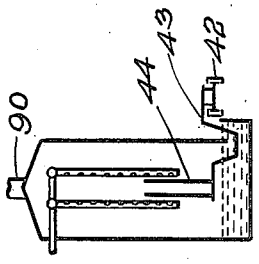

FIG. XIII.

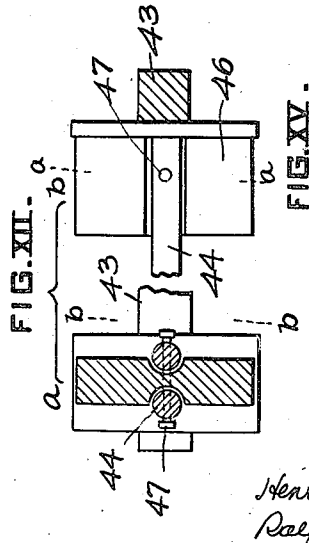

FIG. XII.

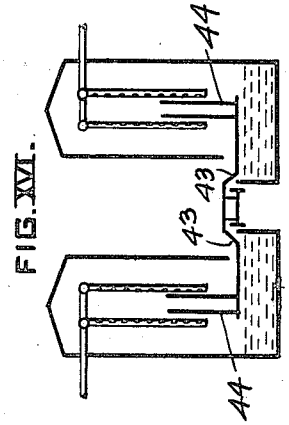

FIG. XVI.

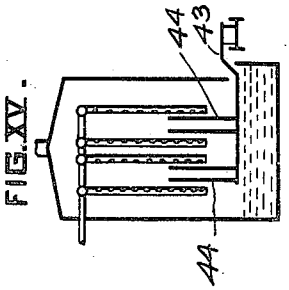

FIG. XV.

WITNESSES

J. Herbert Bradley

Harris J. Donaldson

INVENTORS

Henry S. Marsh

Ralf S. Cochran

by Christy and Christy

their attorneys

UNITED STATES PATENT OFFICE.

HENRY S. MARSH AND RALF S. COCHRAN, OF YOUNGSTOWN, OHIO.

APPARATUS FOR PICKLING METAL ARTICLES.

1,392,781. Specification of Letters Patent. Patented Oct. 4, 1921.

Original application filed March 27, 1920, Serial No. 369,173. Divided and this application filed October 12, 1920. Serial No. 416,547.

To all whom it may concern:

Be it known that we, HENRY S. MARSH and RALF S. COCHRAN, residing at Youngstown, in the county of Mahoning and State of Ohio, both citizens of the United States, have invented or discovered certain new and useful Improvements in Apparatus for Pickling Metal Articles, of which improvements the following is a specification.

This is a division of application Serial No. 369,173, filed March 27, 1920. In that application a method of pickling metallic articles is claimed and with the method an apparatus is described in the operation of which the method is performed.

In this application we lay claim to the apparatus. It is apparatus for pickling of metallic articles; and the invention, as we have developed it, particularly concerns the pickling of sheet steel in course of fabrication. As will be apparent, the invention in its broader aspects is applicable to pickling metallic articles generally, whatever be the shape or substance. The invention consists in improvements in apparatus for conducting of pickling in continuous operation. The idea of pickling in continuous operation has been proposed before, but never to our knowledge has it been successfully carried out. Indeed, as heretofore proposed, a highly concentrated acid has been necessary, and for this reason alone those proposals have been impracticable.

The operation of our present invention may be successfully conducted in coördination with that of the continuous circulation of pickling solution, after the manner disclosed in our now pending application for Letters Patent, filed January 9, 1920, Serial No. 350,383. It need not, of course, be coordinated with this or any other particular system for maintaining the efficiency of the pickling solution, but, since we have so developed it, we shall here describe it in that coördination. Incidental to the apparatus which forms the subject matter of this application are means for loading the material to be treated upon the conveyer and means for removing the material when treated from the conveyer. These means form no part of the present invention but are made the subject of another application for United States Letters Patent filed by us August 16, 1921, Serial No. 492,665.

Referring to the drawings, Figure I is a diagrammatic view of the entire system of apparatus in which and in the operation of which our present invention is realized. The succeeding figures of drawing show to larger scale, and in the sequence of the progress of the material under treatment, the several component pieces of apparatus. Fig. II is a diagrammatic view in side elevation of the scale breaker, in which the sheet steel is prepared for the pickling operation; Fig. III is a view in transverse vertical section, on the plane indicated by the line III—III, Fig. I, through the transfer table and adjacent conveyer; Fig. IV is a view in side elevation of this same transfer table in its relation to the conveyer; Fig. V is a view in transverse vertical section, on the plane indicated by the line V—V, Fig. I, of the pickling chamber and of the conveyer as related thereto; Fig. VI is a plan view, to smaller scale than Fig. V, of pickling chamber and rinse chamber; Fig. VII is a view in longitudinal vertical section, and to equal scale with Fig. VI, through pickling chamber and rinse chamber, the plane of section being indicated by the line VII—VII, Fig. VI; Fig. VIII is a view in transverse vertical section, and to a scale somewhat larger still than that of Fig. V, through the drier, the plane of section being indicated at VIII—VIII, Fig. I; Fig. IX is a view in side elevation of the drier; Fig. X is a view in transverse vertical section through the discharge, the scale being somewhat less than that of Fig. V, and the plane of section will be found indicated at X—X, Fig. I. Fig. XI is a view in side elevation of the discharge. Fig. XII shows in two fragmentary sectional views an expedient for adapting the conveyer for the reception of smaller sheets than the maximum. Figs. XIII and XIV are views in transverse section and in side elevation of the pickling chamber, adapted to the incidental possibility of collecting the hydrogen gas generated in the pickling operation. Figs. XV and XVI are views in transverse section through the pickling chamber, showing how certain of the machine parts of Fig. V may be duplicated, with advantages which will be explained in the sequel.

The necessity for pickling steel sheets in

the course of fabrication is universally known, and need not be dwelt on.

Beginning with the scale-covered sheet, and before subjecting it to the pickling operation, we, in the practice of our invention, preferably put it through a scale breaker. We may use as a scale breaker a machine of the sort commonly used for straightening sheets and plates, and such a machine will be used in the regular way,—though ordinarily the degree of bending to which the sheets are subjected will, to satisfy our purposes, be greater than that ordinarily required when the machine is used for straightening. If the sheets to be dealt with are heavy, a specially designed machine may be required, to withstand the strain.

The scale breaker is indicated at 1, in Fig. I of the drawings, and in Fig. II an ordinary sheet-straightening machine is diagrammatically shown, with a sheet advancing through it and undergoing the scale-breaking process. The machine consists essentially of a succession of positively driven rolls 11 (the number is not material) between which the sheet is warped, first in one direction and then in the other. A pair of rolls 12 at the receiving end of the scale breaker will bite upon the entering sheet and feed it between the sheet-bending rolls, while a second pair of rolls 13 at the delivery end will flatten the sheet again and feed it forward to the next ensuing piece of apparatus.

The scale with which the sheet is coated is brittle, while the underlying steel is ductile, and the bending of the sheet first one way and then the other will loosen the scale, so that much of it will drop off, and what remains will be to such extent loosened that in the ensuing pickling operation the acid will the more readily work underneath and gain access to the steel. These rolls of the scale breaker may be, and preferably are, heated (as by a flame applied beneath), to heat the sheets and so prepare them for the ensuing pickling operation.

The sheets may be fed to the scale breaker one by one, by hand. In Figs. I and II, and elsewhere throughout the drawings, the arrows marked *a* indicate the direction of the advancing sheets.

From the scale breaker the sheets are delivered one by one to a table 3, Fig. I, more fully illustrated in Figs. III and IV. The table 3 is so arranged that the sheet (A) delivered by the scale breaker will initially rest upon it, in the full-line position indicated in Fig. III, in which the center of gravity of the sheet lies beyond the edge of the horizontal portion of the table. The sheet will advance upon table 3, maintaining this position, until its rear edge passes from the rolls 13 of the breaker. Thereupon it will swing of its own weight from the full-line position shown in Fig. III to the dotted-line position, and will slip down the apron 31 with which table 3 is provided and come to position in conveyer 4.

The conveyer 4 will be understood best by comparing the showing of Fig. I with that of Fig. V. It consists of an endless flexible body member, in the form of a belt or chain, equipped with rollers 41 which travel in guide channels 42. It is so disposed that, throughout its work-performing reach, it extends through the succession of chambers presently to be described, and carries the sheets with which it then is laden through these chambers one after another; while throughout its idle return reach, it is out of the way. Conveniently, and as shown, the idle, return reach of the conveyer is above the work-performing reach, and the work-carrying parts there assume inverted position.

The conveyer 4 is provided with laterally extending arms 43, and from these arms fingers 44 extend. Throughout the work-performing reach of the conveyer, these fingers stand vertically. They are arranged in pairs, and their tips may flare divergently, to insure the automatic reception of the sheets descending from table 3. The sheets come to rest in the notch defined by the successive pairs of fingers; the fingers engage the sheets at intervals on opposite sides, and support them in edgewise standing position as they are borne forward through the chambers. All this is clearly shown in the drawings.

Throughout that portion of its path where it receives the sheets, the conveyer may rest upon a spring-backed buffer plate 45.

Those parts of the conveyer which in the course of operation are exposed to acid, preferably made of metal, may be made of such acid-resisting material as Monel metal or Duriron (a cast iron high in silicon).

The pickling chamber is indicated at 5, Fig. I, and its particular construction will be understood on comparing Figs. V, VI, and VII. It is a long narrow chamber, surrounding the conveyer throughout a portion of its work-performing reach. The walls of the pickling chamber are preferably heat-insulating, and may conveniently be formed of wood. Within the chamber, and on either side of the path of the advancing sheets, is arranged a succession of spray nozzles, which conveniently take the form of vertically extending perforated pipes 51, hung at suitable successive intervals from mains or headers 52 above. The lower portion of the chamber constitutes a trough, wherein a body of acid B may accumulate. From this trough circulation pipes 53 communicate with the headers 52. Pumps 54 are provided to maintain circulation.

At intervals throughout the length of chamber 5 the trough is dammed across by

barriers 55. (Two such are shown in Fig. VI). And it will be observed that these barriers subdivide the pickling chamber into distinct units, so far as concerns acid circulation, there being a separate circulation pipe 53 for each unit, and separate headers 52 for each unit. Communication is had from unit to unit by overflow of pickling solution, over the tops of the barriers.

Within the pickling chamber 5 near the bottom, projecting from the side of the chamber from which the circulation pipes 53 lead, overhanging the trough in the bottom of the chamber and the accumulation B of liquid in the trough, and underlying the conveyer arms 43, is a shelf 50. This shelf, though it may be continuous throughout the length of the pickling chamber, preferably is not so, but consists rather of a succession of disconnected boards overhanging, each, one of the outlet openings from the trough through the circulation pipes 53. The solution dripping from the material under treatment would, but for this shelf, keep the body of solution B agitated and particles of scale in suspension, and these, carried through the circulation pipes, would tend to obstruct the spray nozzles. The shelf by its presence prevents agitation, thus allowing the particles of scale to settle, and insures a circulation of clearer solution through the pipes 53 and the spray nozzles. The shelf is preferably discontinuous, to the end that the accumulated sediment of scale may more readily be removed from the bottom of the trough. Such removal will occur at proper and convenient intervals. The functions of the shelf, already indicated in part, are, in addition, to insure a more thorough mingling of the relatively enfeebled acid runing from the sheets under treatment with the relatively vigorous body of pickling solution B, to insure such a circulation through pipes 53 as will involve all the body B of solution collected in the trough, and so to utilize the body of solution as a whole more fully and more effectively than would otherwise be the case, and, finally, to afford, if need be, a support for the loaded arms 43 of the conveyer. The upper surface of this shelf 50 is preferably gently inclined, as shown, downward from the wall of the chamber toward its free end. It will of course be suitably supported; in this respect the showing of Fig. V is diagrammatic.

To prevent a splashing out of the spray of pickling solution, the wall of the pickling chamber may, where it is slotted to allow the entrance of arms 43 of the conveyer, conveniently be constructed as shown in Fig. V. The wall below stands farther out—the chamber is wider below than above; and the arm 43 of the conveyer may at the point of passage of the slot be stepped downward as shown, to the end that the vertical spacing of the margins of the slot may be diminished.

Acid is introduced to the trough in the bottom of the pickling chamber through a supply-pipe 56, arranged preferably at one end of the chamber 5, and advantageously at the remote or delivery end—to the end from which the sheets advance to the next stage of operation. The next chamber (which will presently be more fully described) is the rinse chamber. This rinse chamber is structurally a continuation of the pickling chamber 5, and from a similar trough in its bottom rinse water flows over a barrier 57, similar to the barriers 55 already described, into the trough in chamber 5. Through an exhaust pipe 58 at the opposite end (the receiving end) of the pickling chamber, the pickling solution is led away.

When the trough in the bottom of the chamber 5 is full of pickling solution, pickling may be effected upon sheets advancing through the chamber, by driving pumps 54, and so causing the solution to be sprayed through the pipes 51 upon the opposite surfaces of the sheets as they slowly pass across the paths in which the spray is projected. The pickling solution running from the sheets falls back into the trough below.

It will be understood that, water and fresh acid being supplied at one end of the pickling chamber, and spent pickling solution being drawn off at the other, the presence of the barriers 55 has this effect: that the pickling chamber is subdivided into clearly demarcated regions, and that in these successive regions the pickling solution is of diminishing strength and carries an increasing iron content, from inlet to outlet. Preferably (though not necessarily) the arrangement is that shown: the entering sheets are first sprayed upon by the solution at its weakest, and as they advance through the pickling chamber they receive solution of increasing strength, until at the end they are sprayed upon by fresh solution. Certain economies of this preferred arrangement, in which solution and sheets under treatment advance in opposite directions, are obvious. There is this further, less obvious economy: the concentration of the copperas in solution toward one end of the pickling chamber leaves the pickling solution less contaminated elsewhere. The efficiency of the body of solution as a whole is thereby increased, and less refrigeration is subsequently necessary for the removal of the copperas and the reclaiming of the acid solution.

The acid supplied through pipe 56 is, as will presently be explained, preferably the reclaimed acid flowing from our improved reclaiming apparatus, to which reclaiming apparatus the spent acid flowing out at exit 58 is fed. This reclaimed acid is concen-

trated to a degree greater than the pickling operation requires. Hence the advantage of diluting it with rinse water from the rinse chamber. If with such an arrangement the solution in the pickling chamber is otherwise too weak, manifestly the inflow of acid may be enriched with additions of more highly concentrated acid. This matter will presently be considered further.

The acid preferably enters the trough in the pickling chamber at elevated temperature—the rinse water too is hot; the sheets, as has already been said, are preferably heated in the scale breaker; the walls of the pickling chamber are heat-insulating. The effect is that pickling is done at elevated temperature, and with consequent gain in time. If, in addition to the measures enumerated, still greater accessions of heat are required, heaters 59 may be provided for the circulation pipes 53.

The rinse chamber 6 is, as has been said, continuous structurally with pickling chamber 5. The interior arrangement is essentially the same as in the pickling chamber, and will be understood on comparing Figs. V, VI, and VII. Circulation pipes 63 are shown in Figs. VI, and VII, in which pumps 64 are arranged. Through pipes 63 water passes to headers 62, whence it is sprayed through spray pipes 61. A water inlet is indicated at 66. In the rinse chamber a circulation of hot water is maintained, rather than of pickling solution. Under the spray of hot water in the rinse chamber the advancing sheets are washed free of acid, and from the rinse chamber the acidulated rinse water continually and gradually overflows into the pickling chamber. The rinse water will conveniently be condensed steam, not far below the boiling point.

Next in succession after the rinse chamber stands the drier, shown diagrammatically in Fig. 1, in its place in the organization, and shown in its essential features of construction in Figs. VIII and IX. The drier is simply a chamber through which the now pickled and washed sheets pass, and in which conditions of temperature and circulation are such as to evaporate from the surfaces of the sheets the water with which the surfaces are wet. As shown in an exemplary way in Figs. VIII and IX, this chamber is long and narrow, conforming in some degree in its shape to the pickling and rinse chambers; means of heating are indicated, consisting in this case of a bed of coals on a grate 71; a chimney 72 establishes draft to nourish the fire and to carry away the water vapor as it forms. The slot in the side wall to admit the arms 43 of the conveyer is arranged essentially as in the pickling and rinse chambers, but it will be noted that, inasmuch as within chamber 7 there is no spraying of liquid, the reason does not here exist for the widening of the chamber below and introducing the conveyer arm in a stepped formation downward; accordingly, the slot cuts through an otherwise vertical wall disposed in a single substantial plane.

The advancing conveyer carries the sheets one by one through pickling chamber, rinse chamber, and drier in turn, and then to the discharge mechanism 8 (Fig. I), where the sheets, now pickled and ready for further treatment, are removed from the conveyer. This discharge mechanism may take any form desired. We have (in exemplary way, so far as concerns our broader claims) shown a magnetic discharge mechanism, and this we shall now describe, with particular reference to Figs. X and XI.

Adjacent the path of advance of the sheets borne in conveyer 4, beyond drier 7, and extending parallel with that path, is a pair of magnetic rollers 81. The particular construction of these rollers need not be dwelt on; such rollers are on the market; their characteristic features are that, attracting to their surfaces bodies formed of magnetic material, by turning they convey such bodies from one point to another. The position of rollers 81 relatively to the path of sheet advance is sufficiently indicated in the drawings, and the direction of rotation is indicated by arrow *c*. Conveniently two rollers are employed, mounted on a common axle, and adjustable in their distance apart, to accommodate the mechanism to sheets of different size.

A guide 82 may be provided, to bring the advancing sheet to position adjacent the rollers. As an advancing sheet comes to position to be acted on, it automatically trips a make-and-break device 83, and effects energizing of the electro-magnets of rollers 81, which up to that time had not been energized. Immediately the rollers attract the sheet, and, as they continue to turn, they raise the sheet from conveyer 4 and carry it over their upper surfaces. The rising sheet advances relatively to the roller, so that its forward edge projects farther and farther from the roller. This forward edge passes into a suitable guideway, conveniently formed by opposite lines of idle rollers 84. The momentum of the sheet carries it forward (and its advance may be aided by gravity); the limitations imposed by the guideway cause the sheet to break contact with rollers 81, and the delivery is made to any suitable receptacle. Fig. X shows a crate 85 in which has been stacked a succession of sheets coming through the discharge mechanism. At a point in its course where the magnetism of rollers 81 is no longer advantageous or desirable, the advancing sheet engages a second trip 86, and, automatically swinging this trip, breaks the circuit and deëenergizes again

the magnets of rollers 81. This leaves the rollers in condition, permitting the next advancing sheet to come to position opposite the discharge mechanism, and then a new shifting of trip 83 (which meanwhile has come to initial position—either in consequence of the swinging of trip 86 or otherwise) begins the operation anew. It will be understood that after each operation trip 86 resumes again its initial position, either in consequence of the shifting of trip 83 or otherwise.

Referring now to Fig. I, it will be observed that the conveyer, in traversing, in the direction indicated by the arrow *a*, so much of its path as is in dotted lines there indicated, is loaded with a succession of sheets, and that it carries these sheets through pickling chamber, rinse chamber, and drier, and finally in the discharging mechanism is relieved of its burden. So relieved, the conveyer returns upon itself, it being, as was initially explained, in form an endless belt or chain. The disposition of the return reach of the conveyer is sufficiently indicated in Fig. V.

Figs. XII–XVI illustrate various supplementary or variant features of structure, and may be briefly described.

In Fig. XII is shown in detail how a block 46 may be inserted between each pair of fingers 44 of the conveyer, to diminish the depth of the slot defined thereby, and to adapt the conveyer temporarily to sheets of smaller size than those primarily intended. These blocks will be secured by pins 47, passing through them and through fingers 44, to prevent falling out when the conveyer on its return reach is inverted.

Figs. XIII and XIV illustrate an adaptation of the pickling chamber for the recovery of the hydrogen gas generated in the pickling operation. The slot in the chamber wall through which the arm 43 of the conveyer extends is sealed by the liquid accumulating in the trough in the bottom of the chamber, the particular construction of wall and slot and conveyer arm are clearly indicated in Fig. XIII, and the essential features will be taken in at a glance. No further description is necessary.

When hydrogen is to be recovered, the ends of the pickling chamber will be closed, and the roof of the chamber will rise to a chimney 90 through which the hydrogen may be led off to suitable apparatus for collecting, drying, and compressing the hydrogen. Such apparatus is diagrammatically indicated at 91, Fig. I. As has just been said, the ends of the pickling chamber will in this case be closed, partially at least. The end walls may conveniently be made wholly or in part of sheet rubber, and through the rubber slits may be cut, to allow the passage of the conveyer. The bearing of the flaps formed by the edges of the slits upon the passing bodies will be effective, to reduce to a minimum circulation of gases, and will be found a practicable expedient to attain the ends in view. The conveyer, which throughout the length of the pickling chamber dips below the surface of the reservoir of pickling solution B maintained in the bottom of the chamber, must pass over the end wall of the trough. To effect this, the guides 42 in which the conveyer runs are arched over the end walls of the trough, as is illustrated in Fig. XIV. And, that the opening through the end walls of the chamber shall in the course of operation be kept as small and as tightly sealed as possible, the trough may be prolonged beyond the end walls of the chamber, and the submersion of the conveyer in the solution in the trough (and, at the other end, the emerging of the conveyer) may be effected beyond the limits of the hydrogen-collecting chamber. This is indicated in Fig. XIV. To allow the conveyer to pass the barriers which extend athwart the trough at intermediate points, the barriers themselves may be partially cut away. The barriers may be formed, so far as necessary, of such flexible material as sheet rubber, through which openings for passage of the conveyer may be formed. By such provision, as will be understood, the size of the openings through the barriers, while sufficient, will still be kept at a minimum.

Fig. XV indicates that a double line of plates may be carried on the succession of conveyer arms 43, and that within the pickling chamber and the rinse chamber the spray apparatus may be correspondingly doubled. It will be understood that, with this arrangement, two charging tables 3 will be provided, one on either side of the conveyer, and, correspondingly, at the point of discharge, duplicate discharging apparatus will be arranged on either side of the conveyer.

Fig. XVI indicates that the conveyer may be relieved of twisting strains by providing duplicate oppositely extending arms 43, and that the several parts of the apparatus shown diagrammatically in Fig. I and now described may be correspondingly duplicated, on either side of such a conveyer.

We remarked at the outset that apparatus of our invention for continuous pickling might be combined with a system for circulating the pickling solution in continuous cycle and relieving it at a suitable point in the circuit of the accumulating copperas (the product of pickling) and incidentally replenishing the acid content. Such a system is described in our pending application, filed January 9, 1920, Serial No. 350,383. Indeed, in such a combination itself lie specific features of invention. It re-

mains now to follow the course of the circulating pickling solution, and to indicate to what treatment it is subjected, and in what apparatus.

We shall begin with the spent solution emerging from the pickling chamber through orifice 58, Fig. VII. The solution as it here emerges is, for pickling purposes, relatively weak and ineffective. A large part of the sulfuric acid which the solution carried when it entered the pickling chamber has reacted with the iron of which the sheets are essentially composed, and been converted into copperas, and this copperas has continued in solution, enfeebling the solution by its formation, and tending by its presence in solution to render the enfeebled acid still less effective than otherwise it would be. The solution emerging then through orifice 58 is a relatively weak solution of sulfuric acid in water, carrying also in solution a substantial burden of copperas.

From the pickling chamber the solution flows, conveniently by gravity, to a settling tank 92 (Fig. I). This may be merely a large wooden tank of sufficient size to hold all the liquid on hand at any one time. In this tank whatever scale and other solid matter may be carried from the pickling chamber may settle and be removed. Here too will be added such quantities of fresh acid (ordinarily of 60% purity—possibly as high as 66%) as are requisite to bring the reclaimed acid to the proper strength for re-introduction in continuous operation to the pickling chamber again. The reason for adding the acid at this point will presently be explained; herein is a feature of invention with us. An acid storage tank 93 is indicated, from which acid may flow to tank 92 in such measured quantities and with such continuity or at such intervals as may be desired.

From tank 92 the acid, now strengthened but still carrying its burden of copperas, is pumped by a pump 94 to reclaiming apparatus 95. This reclaiming apparatus need not here detain us; it is fully described in our application alluded to. In it the circulating stream of solution is, by means of cooling and agitation, freed of the copperas. The crystallized copperas, wet with acid solution, is carried to a centrifuge 96, where the acid solution is separated and returned to the line through which the reclaimed acid solution is delivered from the reclaiming apparatus to flow to the pickling chamber. The accumulated mass of copperas crystals may, while still in the centrifuge, be rinsed in water and then removed, in condition sufficiently free from acid and sufficiently dry to be marketable.

We here interrupt the description to give explanation of a refinement in the reclaiming operation. It has just been remarked that there is advantage in making the additions of fresh acid before the removal of the copperas. We find that, by so increasing the acid strength of the solution still carrying the copperas, the copperas may be removed much more rapidly and much more completely than otherwise.

From the reclaiming apparatus the acid passes, on its way back to the pickling chamber, through a heater 97, to restore its heat and bring it again to a temperature of say 200° F. From the heater the acid enters the pickling chamber through the orifice 56, and it there is diluted to working strength by mingling with the water coming from the rinse chamber over barrier 57.

A few incidental matters require further mention. First, the matter of temperature. The pickling operation is conducted at relatively high temperature, about 200° F. The spent pickling solution is hot and it enters the reclaiming apparatus at a temperature not far below 200°. There, as is explained in our copending case already alluded to, a portion only (and that a relatively small portion) of the heat is lost, for, by suitable heat transference, the liquid, first chilled to remove the copperas, is, before it passes on, heated again. In the heater the minimum loss necessarily incident to reclaiming is restored, and the reclaimed and strengthened solution reënters the pickling chamber at the temperature of pickling. It has been noted in the progress of the specification that the sheets are heated in preparation for pickling, and that the rinse water, which in the pickling chamber becomes the diluent for the acid, is supplied at a temperature near the boiling point.

The rate of flow of rinse water and the rate at which fresh acid is supplied will be coördinated, to maintain in the pickling chamber a solution of required strength.

As to hydrogen recovery, two cubic feet of hydrogen gas are evolved for every pound of 60% acid consumed. Hydrogen generated at this rate is a by-product of substantial value. In the pickling operation as now commonly conducted hydrogen recovery is practically impossible. In the practice of our invention it becomes wholly practical, and indeed very simple.

By virtue of the spray system now described, acting upon the continuously advancing succession of sheets, it will be observed that each sheet in turn passes beneath a succession of sprays and that while these sprays are of different degrees of purity and intensity so far as concerns acid content, there is one spray, preferably the last in the succession which the sheet encounters, in which the sprayed-on solution

is practically free of copperas. We preferably, in the performance of the operation, so proportion the supply of components that the solution at this point shall be relatively high in its acid content, that is to say high as compared with the acid content of pickling solutions generally, and we maintain it at high temperature, near the boiling point. The conjoint effect of all of these provisions: (1) the initial loosening of the scale; (2) the application of the solution by spray; (3) the consequent continual washing away of the loosened scale; (4) the subjection of every area of the surface of the article to a continually fresh stream; (5) the high temperature due to preheating of the sheets and preheating of the solution; (6) the washing away of adhering bubbles of hydrogen—is to make possible continuous pickling as it has not to our knowledge been possible heretofore.

A limitation which has heretofore been deemed insuperable in pickling has been that high temperature is impracticable, because, when sheets are taken from the solution which is too hot, they emerge coated with an objectionable black deposit. The black coating is formed after the scale is removed and while the sheets remain still in the pickling bath. By removing the sheets from the action of the pickling solution immediately on the disappearance of the scale (the time of operation may be regulated by controlling the speed of the conveyer, to meet any condition), and by carrying the sheets immediately, as soon as pickling is completed, directly from acid sprays to water sprays, and then bringing them progressively into a drying chamber, the development of such a black deposit is prevented.

We have in the foregoing specification described in some detail a number of pieces of associated apparatus, and the mode of operating them. Much of this showing is exemplary, and our invention is by no means confined to an exact following of such instruction. In the ensuing claims we define the essence of our invention, and, so long as this be present, our invention will be practised, regardless of whether the minute description given be adhered to or not.

We claim as our invention:

1. In apparatus for pickling sheet metal means for projecting laterally a succession of sprays of pickling solution, and means for sustaining a sheet of metal in vertical position and for causing it to advance through such succession of sprays, substantially as described.

2. In apparatus for pickling sheet metal in continuous operation, means for sustaining a succession of sheets in vertical position and for causing them to advance while so sustained and means for projecting upon opposite surfaces of each sheet as it advances sprays of pickling solution, substantially as described.

3. In apparatus for removing scale from the surface of a flexible metal article, the combination of means for bending the article and thereby loosening the scale upon it, means for maintaining a spray of pickling solution, and means for feeding the article from the bending means through the spray of pickling solution, substantially as described.

4. In apparatus for removing scale from the surface of sheet metal, the combination of a bending apparatus consisting of a plurality of rolls between which the sheets are passed, means for heating the rolls of said bending apparatus, means for maintaining a spray of pickling solution adjacent such bending apparatus, and means for causing the sheets delivered from said bending apparatus to advance under such spray of pickling solution, substantially as described.

5. In pickling apparatus the combination of a trough subdivided by barriers into compartments, with communication over said barriers from compartment to compartment, means for causing a body of pickling solution to flow through said trough from one end to the other, means for withdrawing from each compartment a portion of the contained solution and projecting it in the form of spray above the trough, and means for causing an article to be pickled to advance above the trough and through the succession of sprays defined, substantially as described.

6. In pickling apparatus, the combination of a trough subdivided by barriers into compartments, with communication over said barriers from compartment to compartment, means for causing a stream of water entering at one end to flow through said trough to the other end, means for introducing into a compartment other than the first a stream of pickling acid, means for withdrawing from each compartment portions of the liquid therein contained and projecting them in the form of spray above said trough, means for causing an article to be treated to advance above said trough, through such sprays, and in a direction opposite to that in which the liquid flows through the trough, substantially as described.

7. In pickling apparatus, the combination of means for maintaining a flowing stream of pickling solution, means for withdrawing from the stream at successive points portions of the flowing liquid and for projecting in a succession of sprays the portions withdrawn, and means for causing an article to be treated to traverse said sprays in a direction countercurrent to the stream, substantially as described.

8. In pickling apparatus the combination

of a closed chamber, means for causing the article to be treated to advance through said chamber, means for directing upon the article advancing within the chamber a spray of pickling solution, and means for removing the gas generated by the pickling operation and collecting in said chamber, substantially as described.

9. In pickling apparatus the combination of means for causing a succession of articles to be treated to advance in a determined path, means for causing pickling solution to advance in closed cycle, in a path which shall in part intercept the path for the articles to be treated, means for causing the solution to form a spray in that part of its path which coincides with the path of the material, and means for subjecting the pickling solution elsewhere in its cycle to a reclaiming operation, substantially as described.

10. In pickling apparatus means for projecting a flowing stream of pickling solution in a succession of sprays and means for causing the article under treatment to advance through the sprays in a direction countercurrent to the stream, substantially as described.

In testimony whereof we have hereunto set our hands.

HENRY S. MARSH.
RALF S. COCHRAN.

Witnesses:
Mrs. C. G. SHAFFER,
ED. J. RUSSERT.