March 19, 1963 M. J. DI PIERRO ETAL 3,081,921

LEAKPROOF OILING DEVICE

Filed March 6, 1961

FIG. 1

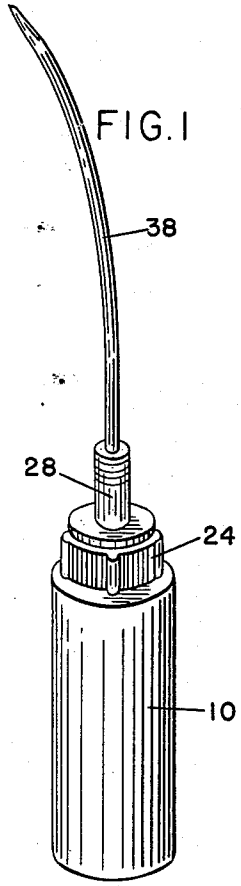

FIG. 2

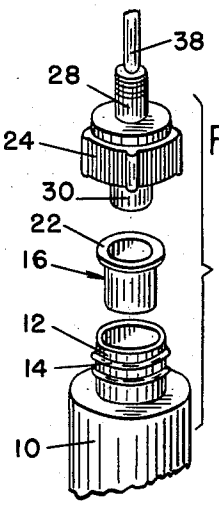

FIG. 3

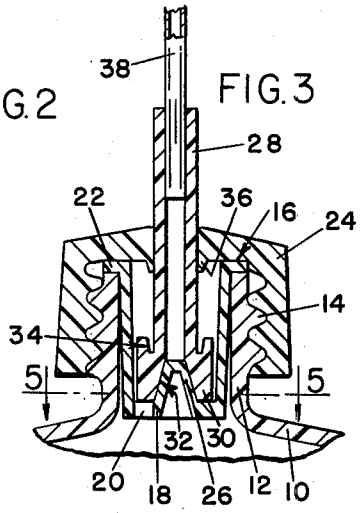

FIG. 4

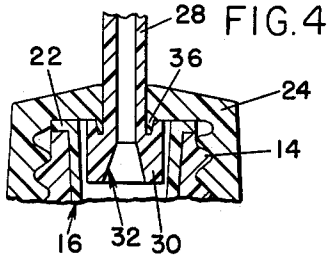

FIG. 5

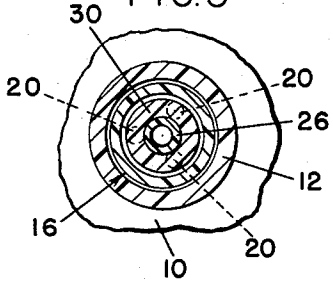

FIG. 6

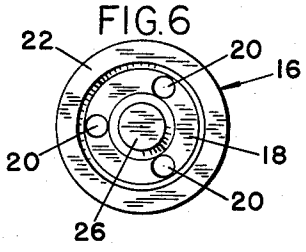

INVENTORS
MICHAEL J. DiPIERRO
PHILIP M. NIGRO

by Charles R. Fay

ATTORNEY

United States Patent Office 3,081,921 Patented Mar. 19, 1963

3,081,921

LEAKPROOF OILING DEVICE

Michael J. Di Pierro, Shrewsbury, Mass., and Philip M. Nigro, Worcester, Mass. (both % Di Pierro Mfg. Co., Inc., 420 Boston Turnpike, Shrewsbury, Mass.)

Filed Mar. 6, 1961, Ser. No. 93,554
3 Claims. (Cl. 222—525)

This invention relates to a new and improved leak-proof oiling device and container therefor, and the principal objects of the invention reside in the provision of a plastic squeeze bottle type of oiler or other container which is provided with a new and improved combined closure and valve and including an elongated spout, in which the valve can be manipulated to open and close the device when it is desired to utilize the same for oiling or to lay it aside when not in use.

Other objects of the invention include the provision of a valved oiler of the class described including a special new and improved closure valve which is removable quickly and easily for refilling the container with oil and which is quickly and tightly replaceable for operation of the device, the same including an opening and closing valve which is attached to the spout so that it is only necessary to push or pull the same in order to close or open the valve, and in combination with a new and improved cap which is slidably attached with respect to the valve stem.

The invention further relates to arrangements and combinations of parts which will be hereinafter described and more particularly set forth in the appended claims.

Reference is to be had to the accompanying drawings in which

FIG. 1 is a perspective view illustrating the new oiler;

FIG. 2 is an exploded view showing the parts separated;

FIG. 3 is an enlarged sectional view through the valve showing the same in closed condition;

FIG. 4 is a view similar to FIG. 3 but showing the valve open;

FIG. 5 is a section on line 5—5 of FIG. 3, and

FIG. 6 is a plan view of the valve body.

In carrying out the present invention, there is provided a container 10. This container may be of any desired material or construction but it is preferred to be of resilient plastic material in the nature of a squeeze bottle. This container has a reduced neck portion 12 provided with screw threads 14.

There is provided a valve body member which is generally indicated by the reference numeral 16. This valve member is best shown in FIGS. 3 and 6. It is generally cylindrical and is closed at its inner or bottom end at 18 except for vents 20 for passage of the oil when the valve is open. The valve body 16 is open at its upper end and has an exterior lateral flange 22 which is adapted to rest upon the rim of the reduced portion 12 of the container 10, as clearly shown.

This valve body 16 may be closely and sealingly held to the rim of the reduced portion 12 by means of an internally threaded cap 24 which may also be made of plastic and which when tightened (see FIGS. 3 and 4), will cause flange 22 to be tightly sealed to the rim of the reduced portion 12 of the container 10, thus preventing leakage of any kind at this point.

At the closed bottom portion 18 of the valve member 16, the same is formed with a closed central truncated conical construction rising therefrom interiorly thereof, this being indicated by the reference numeral 26. This construction forms an annular groove or the like extending about the interior of the valve body 16 at the bottom thereof, there being communication between this groove and the interior of container 10 by means of the several holes 20.

The cap 24 is centrally apertured and slidingly receives therein an elongated cylindrical member or tube 28 which is open from end-to-end thereof and is preferably made of a type of plastic which when slidingly engaged with the edges of the aperture in the cap provide for a substantially complete seal.

The tube 28 is provided at its inner end with an enlargement 30, this enlargement having a conical central recess therein at 32 which conforms closely to the shape and size of the conical portion 26 of valve member 16. When in the position of FIG. 3, the taper fit of the wall of recess 32 and the part 26 provides a completely leak-proof seal, and this is provided merely by pushing inwardly on the tube 28. This seal is enhanced by the oil pressure in the chamber above the enlargement 30 which helps to provide against accidental dislodgment of part 30 or tube 28 when the oiler is closed and not in use. When tube 28 is pulled up to open the valve, the oil runs back down into container 10, there being a slight clearance between the part 30 and the inner wall of the valve part 16.

At the upper edge of the enlargement 30, there is provided a continuous inwardly tapered groove 34 which receives a thin projection annularly arranged on the cap 24 and surrounding the central aperture therein, this projection being indicated at 36. This is a sealing device for the tube 28 and the groove 34 provides against damage to the projection 36 so it will continue to tightly seal this part of the device substantially permanently. When the container is squeezed, oil pressure causes projection 36 to more tightly grip tube 28 thus improving the seal at the time needed.

Having thus described our invention and the advantages thereof, we do not wish to be limited to the details herein disclosed, otherwise than as set forth in the claims, but what we claim is:

1. An oiling device comprising a container having a neck and a mouth for said neck, a cap for detachable connection with respect to the neck, a hollow valve body having a cylindrical wall located in said neck and having an outer and an inner end, a flange on said valve body wall at the outer end thereof, said cap clamping the flange tightly to said mouth in leak-proof relationship therewith, said valve body being open at its outer end and including an apertured web at the inner end thereof, an outwardly directed centrally located conical projection on said apertured web, said projection being spaced from the interior of the cylindrical wall of said valve body, the aperture in the web forming a communication between the container and the interior of the valve body, a tubular valve actuator open from end to end thereof and having an enlargement at its inner end with an internal hollow conical recessed formation conforming to the conical projection, said cap having a central opening slidably receiving the actuator which extends through the cap for axial motion of the actuator, said enlargement substantially covering said web and the aperture in the web when the actuator is in inwardmost position, there being a slight clearance between the enlargement and the interior wall of the valve body, interengaging means on the cap and actuator forming a leak-proof seal, the valve actuator being manually drawn outwardly to open the aperture in the web to provide communication with the container and the interior of the valve body and the tubular valve actuator for dispensing the contents of the container, and the clearance between the enlargement and the interior wall of the valve body providing for filling of the valve body above the enlargement with oil when the valve actuator is pushed inwardly to substantially close the aperture in the web, so that the valve body is filled with oil above the enlargement, the oil aiding in holding the actuator in the closed position thereof, the flange on the valve body and the interengaging means on the cap and actuator providing

against leakage of the oil in either open or closed positions of the valve actuator.

2. The oiling device of claim 1 wherein the interengaging means on the cap and actuator includes a circular lip on the cap.

3. The oiling device of claim 1 wherein the interengaging means on the cap and actuator includes a circular lip on the cap, said lip extending inwardly and being in sealing engagement with the tubular actuator.

References Cited in the file of this patent

UNITED STATES PATENTS

635,855	Hirsch	Oct. 31, 1899
2,770,399	Gross	Nov. 13, 1956
2,936,935	Rabb	May 17, 1960
2,969,168	Newby	Jan. 24, 1961
2,992,762	Forman	July 18, 1961