March 14, 1944. H. C. BLODGETT 2,343,951

REVERSING DOOR CONTROL AND SWITCH THEREFOR

Filed Feb. 27, 1942 2 Sheets-Sheet 1

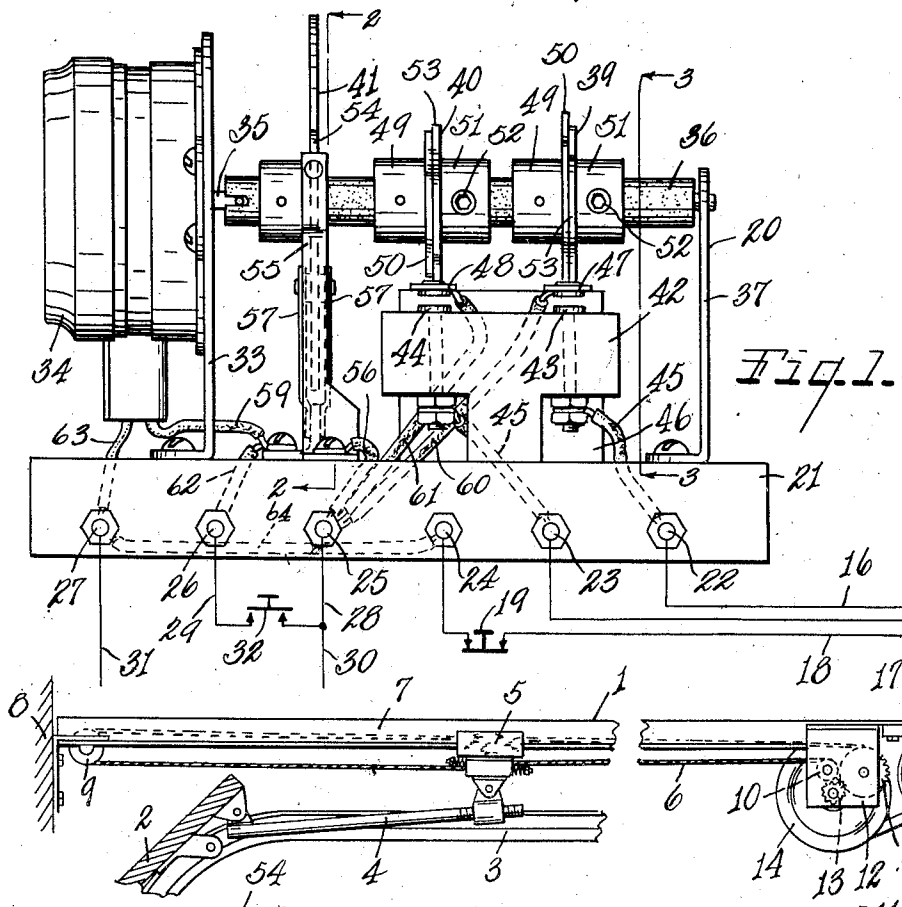

Fig. 1.

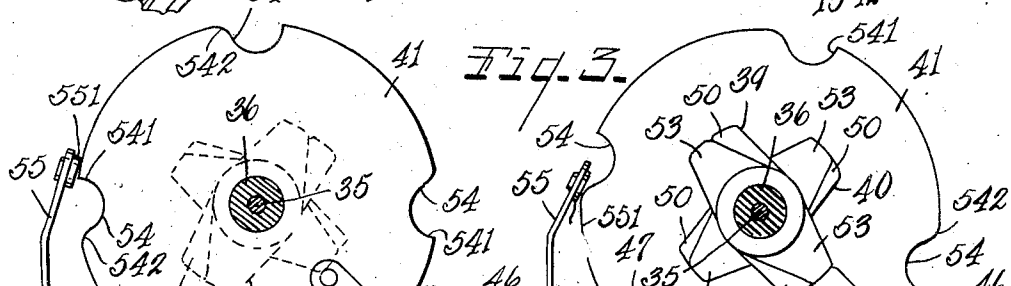

Fig. 3.

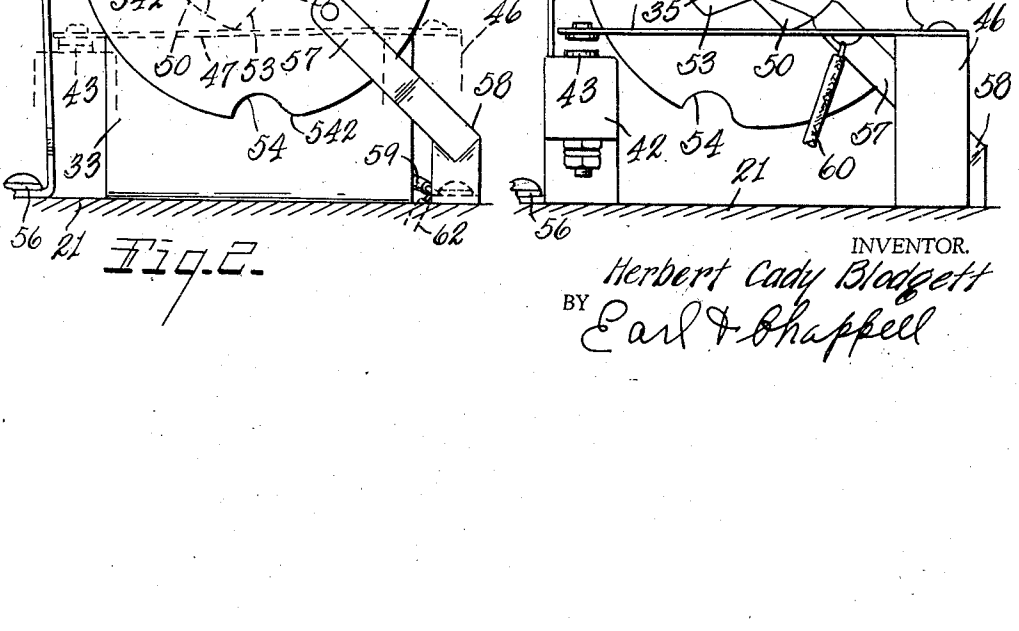

Fig. 2.

INVENTOR.
Herbert Cady Blodgett
BY Earl F. Chappell

March 14, 1944. H. C. BLODGETT 2,343,951

REVERSING DOOR CONTROL AND SWITCH THEREFOR

Filed Feb. 27, 1942 2 Sheets-Sheet 2

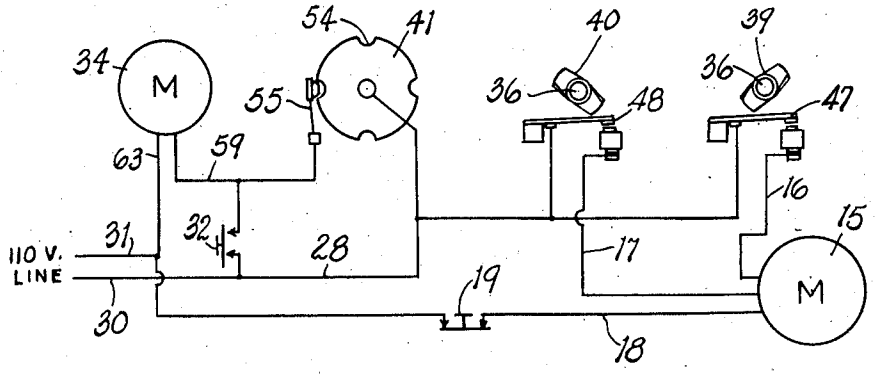

FIG. 4.

INVENTOR.
Herbert Cady Blodgett
BY Earl F. Chaffee
ATTORNEYS.

Patented Mar. 14, 1944 2,343,951

UNITED STATES PATENT OFFICE

2,343,951

REVERSING DOOR CONTROL AND SWITCH THEREFOR

Herbert Cady Blodgett, Hartford City, Ind., assignor to Overhead Door Corporation, Hartford City, Ind.

Application February 27, 1942, Serial No. 432,652

19 Claims. (Cl. 172—239)

This invention relates to improvements in reversing door control and switch therefor.

This application is a continuation in part of my copending application for Letters Patent Serial No. 409,248, filed September 2, 1941, for Automatic door operating mechanism.

The main objects of the present invention are:

First, to provide an improved reversing control well adapted for vertically sliding doors and the like which is characterized by the simplicity thereof, its ease of installation, and the fact that once installed it gives very satisfactory unfailing operation over a long period of time, notwithstanding the fact that it is used many times daily.

Second, to provide a control of the type described which is fabricated in its entirety of comparatively simple inexpensive parts, and is readily assembled and installed on existing sliding doors or similar structures.

Third, to provide a reversing switch which is particularly well adapted for use in a sliding door installation and reversing control therefor, said switch enabling adjustment of the limits of the door movement as desired by a simple adjustment of the switch.

Fourth, to provide a switch of the type described enabling the travel of a vertically acting door to be regulated as desired by a simple manipulation following installation of the control switch on the door.

Objects relating to details and economies of the invention will appear from the description to follow. The invention is defined and pointed out in the claims.

A preferred embodiment of the invention is illustrated in the accompanying drawings, in which:

Fig. 1 is a fragmentary view in side elevation and vertical section illustrating the control of the present invention associated with a vertically sliding door construction and indicating diagrammatically the wiring connections for the same.

Fig. 2 is a fragmentary view of the control switch in transverse section on a line corresponding to line 2—2 of Fig. 1.

Fig. 3 is a similar view illustrating the switch in section on a line corresponding to line 3—3 of Fig. 1.

Fig. 4 is a view illustrating a simple wiring diagram of the electrical connections for the reversing control.

This invention relates in general to a reversing control for a vertically acting door of the type employed for garages, hangars, warehouses and the like. In particular, it relates to an improved switch which is well adapted for use in a control of the foregoing type, such as is illustrated in my copending application, Serial No. 409,248, identified above.

Generally stated the invention resides in the use of a small, inexpensive, push button controlled motor actuating and timing instrumentality which produces equal time cycles of predetermined duration for the operation of the door in the up and down directions, said instrumentality including an adjustable cam arrangement enabling more or less of a given time cycle or period to be used in the operation of the particular door installation involved.

Present methods of controlling the actuation of traveling doors involve the use of a traveling nut, rotating cam or the like driven by some part of a control mechanism which must be kept in time with the movement of the door. There are in use at the present date many non-automatic controls installed in garages, warehouses and the like, in which the operating "up" and "down" must be held depressed during the door travel. To make these installations entirely automatic it would be necessary to rebuild each control, adding a cross line switch, limit switch and necessary connecting mechanism. This is impractical inasmuch as it amounts to a factory job.

It is for the purpose of affording a completely automatic control for existing door installations of the type described that I have devised the present control. The latter is installed in a very simple manner simply by connecting wires to certain terminals thereby making the operation of the door fully automatic. It is unnecessary to hold the push button as heretofore and the installation can be made without removing or changing the existing control.

Referring to the drawings, the numeral 1 in general designates a portion of a vertically sliding door construction including a door having hingedly articulated panels 2, slidably supported and guided by tracks 3, said door being connected by an actuating link 4 to a cable actuated, horizontally reciprocable slide 5. The latter is adapted to slide horizontally from front to rear and vice versa, being actuated and controlled for these movements by a steel cable 6 resiliently connected at its ends to the slide. The slide is guided in a rearwardly extending overhead way 7 secured to the door header 8, and cable 6 is trained over a pulley 9 rotatably

mounted on the said track or way adjacent the header. At the rear thereof the cable is trained successively over an idler pulley 10 and a combined pulley and drive gear 11 which are suitably journaled in a switch bracket 12. Gear 11 is driven from a pinion 13 which is in turn driven by a pulley 14 belt connected to and driven by the reversing motor 15.

A door operating mechanism similar to the above is fully illustrated and described in my copending application identified above, of which the present application is a continuation in part; hence it will not be further described herein. It will suffice to say that slide 5 is actuated in either direction, forwardly or rearwardly, when motor 15 is energized and that the pulley and steel cable drive enables the cable to overrun on the pulleys when either of the limits of door movement is reached, without damage to the motor. This likewise minimizes danger should an object be encountered by the door in descending or rising. Full details of such structure are explained in my said copending application.

Motor 15 is energized by the directional leads 16, 17 connected respectively to the reversing terminals of the motor, while the return lead connected to the common terminal is indicated by the reference numeral 18. The latter has an emergency push button switch 19 inserted therein in order to enable the motor circuit to be broken whenever desired. This push button switch is merely an auxiliary device inserted in the circuit for convenience.

I will now describe the reversing switch, generally designated 20, which constitutes the primary subject matter of the present invention. This switch is provided with a suitable base 21 adapted to be mounted in a convenient position adjacent a door opening, provided with binding posts 22, 23, 24, 25, 26 and 27, to the first three of which the motor leads 16, 17 and 18 are respectively connected. Binding posts 25, 26, have connected thereto parallel leads 28, 29 respectively, which are connected to one live wire 30 of a suitable 110-volt voltage source, the other live wire 31 of said source being connected to the final binding post 27. Lead 29 has a push button switch 32 therein which is adapted to be actuated to set the switch in operation as will be described.

Base 21 has a suitable rigid upstanding support or standard 33 thereon on which is mounted a small motor 34. This motor is of inexpensive type, readily available on the market. The shaft 35 of motor 34 is drivingly connected directly to one end of an insulated spindle 36 extending horizontally and parallel to the base, the other end of said spindle being journaled in an upstanding bracket or support 37 remote from the motor. This spindle carries certain reversing control cam and timing devices to be hereinafter described in detail and generally designated by the reference numerals 39, 40 and 41.

Adjacent and to one side of the reversing cams 39, 40, base 21 is provided with a T-shaped block 42 on the projecting arms of which the fixed reversing contacts 43, 44 are mounted. These contacts are connected by leads 45 to the base binding posts 22, 23, respectively.

Referring to Fig. 3, it will be noted that on the opposite side of the base from the block 42 there is provided a further insulated support 46 which has mounted thereon a pair of laterally extending resilient blade switch members 47, 48, there being a switch blade for each of the fixed contacts 43, 44 provided with a contact disposed over the same and adapted to make and break contact therewith as the blade switches are controlled by the reversing control cams 39, 40.

The cams 39, 40 are of two-part construction. One part consists of a hub 49 fixedly pinned to the insulated spindle and provided with a pair of oppositely projecting radial arms 50 of equal radius. Coacting with the said member in side by side relation thereto is a further adjustable member including a hub 51 which is adjustably secured on the insulated spindle by a set screw 52 and is provided with a pair of radially projecting arms 53 similar to arms 50. The arms 50, 53 are at their outermost peripheries of equal radius and substantial extent, and are adapted to overlap one another in the angular or circumferential sense, so that the arms 50, 53 of each composite two-part cam, when properly adjusted relative to one another by manpulation of set screw 52, coact to constitute a pair of diametrically opposed cam lobes, rises or highs of circular shape engageable with the switch blades 47 or 48, as the case may be.

By an appropriate angular adjustment of these arms the period of time in which blades 47, 48 electrically engage the fixed contacts 43, 44, respectively, may be regulated as desired. This enables the time during which the current flows through motor energizing leads 16, 17, to be regulated through a considerable range, thereby adapting the control for various installations in which the length of travel of the door may vary to a considerable degree. The setting of the adjustable members 51 relative to the coacting fixed members 49 may be readily determined following installation of the control, and may be adjusted with ease by a comparatively unskilled workman.

Cams 39, 40 function to reverse the travel of the slide 5 by reversing the direction of current through leads 16, 17. This they do by making and breaking the electrical contact between switch blades 47, 48 and fixed contacts 43, 44, respectively. Hence, the cams are set on the spindle 36 in such manner that each will release its switch blade from engagement with the contacting contact immediately following completion of the travel of the door or slide 5 under the circuit which has been completed thereby. For the structure described this means that the overlapped pairs of cam arms of the respective cams 39, 40 will alternate at 90 degrees to one another, as illustrated in Fig. 3.

In order to be sure that the circuits will be interrupted after each cycle, I provide means for insuring adequate rotation of motor 34 so as to bring cams 39, 40 to a position in which the blades 47, 48 are released from electrical engagement with contacts 43, 44. For this purpose I employ a timing device in the form of a disk 41 which is fixedly pinned on the spindle 36. This disk is made of conducting metal and is generally circular in outline, being provided with recesses 54 of substantial depth and arcuate extent in its periphery spaced 90 degrees from one another. The rotation of disk 41 is at a speed of 2 R. P. M., in a clockwise direction as viewed in Fig. 2. Coacting with the periphery of the cam there is provided a resilient conducting blade 55 connected by a supply lead 56 to the terminal 25. This blade has a contact 551 thereon in engagement with the periphery of timing disk 41 so as to complete an electrical circuit therewith and drops into one of the recesses 54 to break the circuit

when the recess is brought into alinement therewith by the rotation of the disk. In order that this circuit breaking action shall be abrupt, the leading edge of recess 541 is made sharp or abrupt. The rear edge is curved at 542 so that a smooth engagement or contact is made when said edge rotates into register with the contact. Obviously, non-conducting portions or areas on disk 41 would serve the same purpose as the recesses and are to be regarded as the full equivalent thereof.

Disk 41 is continuously engaged on the sides thereof by the resilient forked arms 57 of a conducting brush member 58 which is secured to base 21 on the opposite side thereof from the spring contact blade 55. This conducting brush member is connected by lead wire 59 to motor 34. Binding post 25 is connected by leads 60, 61 to the movable switch blades 47, 48, respectively of the reversing switches.

In order to initially energize motor 34 by actuation of push button 32 I employ a lead 62 from binding post 26 which is electrically connected to the supply lead 59 of said motor, while a return motor lead 63 connects the same to binding post 27 to which the line return 31 is attached. The return binding post 24 for motor 15 is also connected to binding post 27 by a return wire 64.

In operation, assuming that the parts are in the position illustrated in Fig. 3, and that the door or slide 5 is in one of its terminal positions, in order to actuate the slide to its opposite position, push button 32 is actuated to complete a circuit from the source of power through lead 30, switch 32, leads 29, 62, 59, motor 34 and return leads 63, 31. The push button is held only a sufficient time to cause motor 34 to rotate spindle 36 sufficiently to engage contact blade 55 with the periphery of the timing disk 41. As a result a circuit is completed through leads 30, 28, 56, contact blade 55, timing disk 41, conducting switch member 58, lead 59, motor 34 and return lead 63 to line 31, which maintains the rotation of the motor 34 through the next succeeding cycle, i. e., a quarter revolution of spindle 36. Simultaneously, a further energizing circuit for the main motor 15 is completed as follows: Leads 30, 28, 60 (or 61), switch blade 47 (or 48), contact 43 (or 44), lead 45, motor feed wire 16 (or 17), motor 15, motor return 18, return wire 64, and line return 31. This causes the desired operating movement of the slide, the duration of which is determined by the setting of the arms 52 of the respective reversing cams. At the termination of said movement the parts will be, for example, in the position illustrated in Fig. 2, and, assuming that at this time arm 47 is still forced into engagement with the fixed contact 43 by the cam, the rotation of the spindle is continued by the circuit through the timing disk including forked arms 57, disk 41 and blade 55, until the reversing cam allows contact blade 47 to disengage from its fixed contact. This breaks the energizing circuit for door actuating motor 15, immediately after which blade 55 drops into recess 54 to interrupt the holding circuit and bring motor 34 to rest in a position corresponding approximately to that illustrated in Fig. 3 and in readiness for another cycle.

Assuming a speed of 2 R. P. M. for motor 34, as indicated above, the time period elapsing between recesses 54 in the rotation of the timing disk is 7½ seconds. A door eight feet high opens in 6 seconds so that it is clear that the timing disk affords a period of operation for motor 34 in each operating cycle which is ample to open or close a good-sized door. If the control were provided with a 1 R. P. M. motor the time elapsing between recesses would be 15 seconds and accordingly a higher door could be operated. However, in the illustrated embodiment there are four equal cycles of 7½ seconds duration each, in which a continuous power feed to drive the motor is supplied. Each equal movement of the timing shaft rotates a double cam or quadrant which may be adjustably set to use a portion or all of its circumferential arc to continue the motor operation, thereby determining the portion of the 7½ second cycle under which the door is motor driven, if the whole period is not employed. There are two double quadrants or cams, one for "up" and one for "down."

In contrast to the foregoing exceedingly simple device, in order to convert the usual door control for automatic operation it is necessary to employ an expensive cross-line switch to reverse the motor leads, a limit switch to regulate the travel and the necessary mechanical equipment to connect the switch. The cost of either a limit switch or a cross-line switch is many times the cost of the present control, and the total absence of further mechanical equipment to attach the switch represents a still further cost saving. Moreover, the usual cross-line and limit switch installations are not adapted to a control using a cable as the driving member, but must utilize a chain, inasmuch as the door actuating carriage and limit switch must always be in definite time relation. A cable slipping on its driving drum would destroy this relation. The present timing and reversing switch control is well adapted to the comparatively inexpensive cable type drive, since the time period or cycle of the control motor operation is set. Should obstruction prevent movement of the door the out of time condition resulting will be corrected on the subsequent operation.

The push button switch 19 is useful as an auxiliary or in an emergency to terminate the movement of the door or slide at any time or in either direction thereof. It will be appreciated, however, that when this switch is manipulated the cycle of rotation of the small motor 34 continues nevertheless until a neutral position is reached.

An embodiment of the invention which incorporates the principles of the invention in a highly desirable manner has been illustrated and described. It should be understood that the foregoing terminology is used only descriptively rather than in a limiting sense, and with full intention to include equivalents of the features shown and described, within the scope of the following claims.

Having thus described my invention what I claim as new and desire to secure by Letters Patent is:

1. A reversing and timing switch for a reversing motor or the like, comprising sets of coacting relatively movable contacts adapted to be connected respectively to the reversing terminals of said motor to electrically energize the same when the contacts are closed, a cam device actuating each of said sets and controlling the opening and closing thereof, comprising a pair of coacting cam members positioned side by side having similar radially projecting lobes of substantial circumferential length at the outer periphery thereof adapted for rotative, circumferentially overlapping adjustment relative to one anothher, to

vary the effective peripheral contact actuating cam surface of the coacting lobes, a rotatably mounted shaft on which said members are supported for rotation, one of said members being fixedly secured to said shaft and the other thereof provided with adjustable shaft securing means for adjusting its angular position on the shaft, a motor drivingly connected to said shaft to rotate the same, said cam devices alternately making and breaking circuits at said sets of contacts in predetermined timed relation, the period of duration of the circuit depending on the adjustment of said coacting arms and length of cam surface presented thereby, and an energizing circuit for said last named motor including a push button switch instantaneously actuable to energize said motor, and a holding device in said last named circuit and controlled by the rotation of said shaft for maintaining the energization of said motor following release of said push button switch and for a predetermined period following interruption of the circuit controlled by a cam device, said holding device including a rotatable conducting member fixed to said shaft having non-conducting areas of substantial size therein dividing the same into successive conducting segments of uniform size, a contact in continuous electrical engagement with said member, and a further contact electrically engaging and completing a circuit through said member for predetermined intervals, said last named contact successively having electrical engagement with a conducting member segment for a period corresponding to one of said last named intervals, and coming into register with a non-conducting area to interrupt said last named circuit, said member being positioned angularly on said shaft relative to said cam devices in such manner that said last named contact reaches a non-conducting area after said cam devices have opened one of said first named sets of contacts and electrically engages a segment immediately following energization of said last named motor by actuation of said push button switch.

2. A reversing and timing switch for a reversing motor or the like, comprising sets of coacting relatively movable contacts adapted to be connected respectively to the reversing terminals of said motor to electrically energize the same when the contacts are closed, a cam device actuating each of said sets and controlling the opening and closing thereof, said devices being adjustable to vary the effective peripheral contact actuating cam surface thereof, a rotatably mounted shaft on which said devices are supported for rotation, a motor drivingly connected to said shaft to rotate the same, said cam devices alternately making and breaking circuits at said sets of contacts in predetermined timed relation, the period of duration of the circuit depending on the adjustment of said cam surface, an energizing circuit for said last named motor including a push button switch instantaneously actuable to energize said motor, and a holding device in said last named circuit and controlled by the rotation of said shaft for maintaining the energization of said motor following release of said push button switch and for a predetermined period following interruption of the circuit controlled by a cam device, said holding device including a rotatable conducting member fixed to said shaft having non-conducting areas of substantial size therein dividing the same into successive conducting segments of uniform size, a contact in continuous electrical engagement with said member, and a further contact electrically engaging and completing a circuit through said member for predetermined intervals, said last named contact successively having electrical engagement with a conducting member segment for a period corresponding to one of said last named intervals, and coming into register with a non-conducting area to interrupt said last named circuit, said member being positioned angularly on said shaft relative to said cam devices in such manner that said last named contact reaches a non-conducting area after said cam devices have opened one of said first named sets of contacts and electrically engages a segment immediately following energization of said last named motor by actuation of said push button switch.

3. A reversing and timing switch for a reversing motor or the like, comprising sets of coacting relatively movable contacts adapted to be connected respectively to the reversing terminals of said motor to electrically energize the same when the contacts are closed, a cam device actuating each of said sets and controlling the opening and closing thereof, comprising a pair of coacting cam members positioned side by side having similar radially projecting lobes of substantial circumferential length at the outer periphery thereof adapted for rotative circumferentially overlapping adjustment relative to one another to vary the effective peripheral contact actuating cam surface of the coacting lobes, a rotatably mounted shaft on which said members are supported for rotation, one of said members being fixedly secured to said shaft and the other thereof provided with adjustable shaft securing means for adjusting its angular position on the shaft, a motor drivingly connected to said shaft to rotate the same, said cam devices alternately making and breaking circuits at said sets of contacts in predetermined timed relation, the period of duration of the circuit depending on the adjustment of said coacting arms and length of cam surface presented thereby, an energizing circuit for said last named motor including a push button switch instantaneously actuable to energize said motor, and a holding device in said last named circuit and controlled by the rotation of said shaft for maintaining the energization of said motor following release of said push button switch and for a predetermined period following interruption of the circuit controlled by a cam device, said holding device including a rotatable member fixed to said shaft, and conducting means coacting with said member in the rotation thereof to make and interrupt said last named motor energizing circuit, said member being positioned angularly on said shaft relative to said cam devices in such manner that said motor energizing circuit is interrupted after said cam devices have opened one of said first named sets of contacts.

4. A reversing and timing switch for a reversing motor or the like, comprising sets of coacting relatively movable contacts adapted to be connected respectively to the reversing terminals of said motor to electrically energize the same when the contacts are closed, a cam device actuating each of said sets and controlling the opening and closing thereof, comprising a pair of coacting cam members positioned side by side having similar radially projecting lobes of substantial circumferential length at the outer periphery thereof adapted for rotative circumferentially overlapping adjustment relative to one another to vary the effective peripheral contact actuating cam surface of the coacting lobes, a rotatably mounted shaft on which said members are supported for

rotation, one of said members being fixedly secured to said shaft and the other thereof provided with adjustable shaft securing means for adjusting its angular position on the shaft, a motor drivingly connected to said shaft to rotate the same, said cam devices alternately making and breaking circuits at said sets of contacts in predetermined timed relation, the period of duration of the circuit depending on the adjustment of said coacting arms and length of cam surface presented thereby, an energizing circuit for said last named motor including a push button switch instantaneously actuable to energize said motor, and a holding device in said last named circuit and controlled by the rotation of said shaft for maintaining the energization of said motor following release of said push button switch and for a predetermined period following interruption of the circuit controlled by a cam device.

5. A reversing and timing switch for a reversing motor or the like comprising sets of coacting relatively movable contacts adapted to be connected respectively to the reversing terminals of said motor to electrically energize the same when the contacts are closed, a cam device actuating each of said sets and controlling the opening and closing thereof, said devices being adjustable to vary the effective peripheral contact-actuating cam surface thereof, a rotatably mounted shaft on which said devices are supported for rotation, a motor drivingly connected to said shaft to rotate the same, said cam devices alternately making and breaking circuits at said sets of contacts in predetermined timed relation, the period of duration of the circuit depending on the adjustment of said cam surface, an energizing circuit for said last named motor including a push button switch instantaneously actuable to energize said motor, and a holding device in said last named circuit and controlled by the rotation of said shaft for maintaining the energization of said motor following release of said push button switch and for a predetermined period following interruption of the circuit controlled by a cam device, said holding device including a rotatable member fixed to said shaft and conducting means coacting with said member in the rotation thereof to make and interrupt said last named motor energizing circuit, said member being positioned angularly on said shaft relative to said cam devices in such manner that said motor energizing circuit is interrupted after said cam devices have opened one of said first named sets of contacts.

6. A reversing and timing switch for a reversing motor or the like, comprising sets of coacting relatively movable contacts adapted to be connected respectively to the reversing terminals of said motor to electrically energize the same when the contacts are closed, a cam device actuating each of said sets and controlling the opening and closing thereof, said devices being adjustable to vary the effective peripheral contact actuating cam surface thereof, a rotatably mounted shaft on which said devices are supported for rotation, a motor drivingly connected to said shaft to rotate the same, said cam devices alternately making and breaking circuits at said sets of contacts in predetermined timed relation, the period of duration of the circuit depending on the adjustment of said cam surface, an energizing circuit for said last named motor including a push button switch instantaneously actuable to energize said motor, and a holding device in said last named circuit and controlled by the rotation of said shaft for maintaining the energization of said motor following release of said push button switch and for a predetermined period following interruption of the circuit controlled by a cam device.

7. A reversing and timing switch of the type described, comprising an output circuit including sets of coacting relatively movable contacts, cam means engaging and controlling the opening and closing of each of said sets including means for adjusting the duration of the periods of opening and closing thereof, a rotatably mounted shaft on which said cam means is supported, a motor drivingly connected to said shaft to rotate the same whereby said cam means is adapted to alternately make and interrupt the output circuit in predetermined timed relation, an energizing circuit for said motor including a push button switch instantaneously actuable to energize said last named motor, and a holding device in said last named circuit for maintaining the energization of said motor following opening of said push button switch and for a predetermined period following interruption of said output circuit by said cam means, comprising a rotary conductor member fixed to said shaft having non-conducting portions in its surface dividing the same into conducting segments of uniform size, a conductor in continuous electrical engagement with said rotary member, and a further contact completing a motor energizing holding circuit through said rotary member and conductor when said last named contact engages a segment, said last named contact laternately registering with said non-conducting portion to interrupt said last named circuit, said rotary member being angularly positioned on said shaft whereby said last named contact comes into circuit interrupting position after said cam means has interrupted the output circuit at one of said sets of contacts.

8. A reversing and timing switch of the type described, comprising an output circuit including sets of coacting relatively movable contacts, cam means engaging and controlling the opening and closing of each of said sets, a rotatably mounted shaft on which said cam means is supported, a motor drivingly connected to said shaft to rotate the same whereby said cam means is adapted to alternately make and interrupt the output circuit in predetermined timed relation, an energizing circuit for said motor including a push button switch instantaneously actuable to energize said last named motor, and a holding device in said last named circuit for maintaining the energization of said motor following opening of said push button switch and for a predetermined period following interruption of said output circuit by said cam means, comprising a rotary conductor member fixed to said shaft having non-conducting portions in its surface dividing the same conducting segments of uniform size, a conductor in continuous electrical engagement with said rotary member, and a further contact completing a motor energizing holding circuit through said rotary member and conductor when said last named contact engages a segment, said last named contact alternately registering with said non-conducting portions to interrupt said last named circuit, said rotary member being angularly positioned on said shaft whereby said last named contact comes into circuit interrupting position after said cam means has interrupted the output circuit at one of said sets of contacts.

9. A reversing and timing switch of the type described, comprising an output circuit including sets of coacting relatively movable contacts, cam

means engaging and controlling the opening and closing of each of said sets, a rotatably mounted shaft on which said cam means is supported, a motor drivingly connected to said shaft to rotate the same whereby said cam means is adapted to alternately make and interrupt the output circuit in predetermined timed relation, an energizing circuit for said motor including a control switch, and a holding device in said last named circuit for maintaining the energization of said motor following opening of said control switch and for a predetermined period following interruption of said output circuit by said cam means, comprising a rotary conductor member fixed to said shaft having non-conducting portions in its surface dividing the same into conducting segments of uniform size, a conductor in continuous electrical engagement with said rotary member, and a further contact completing a motor energizing holding circuit through said rotary member and conductor when said last named contact engages a segment, said last named contact alternately registering with said non-conducting portions to interrupt said last named circuit, said rotary member being angularly positioned on said shaft whereby said last named contact comes into circuit interrupting position after said cam means has interrupted the output circuit at one of said sets of contacts.

10. A reversing and timing switch of the class described comprising an output circuit including sets of relatively movable contacts, adjustable timing cam means operatively associated with each of said sets of contacts for opening and closing them, a driving motor for said timing cam means, said timing cam means being adapted to alternately make and interrupt the output circuit in predetermined timed relation, an energizing circuit for said motor including a control switch, a rotary conductor member driven by said motor with said timing cam means, said conductor member having non-conducting portions in its surface dividing the same into uniform conducting segments, said conductor member being continuously energized, and a contact member for completing a motor energized holding circuit through said rotary conductor member when the last-named contact member engages a conducting segment thereof, said last named contact member alternately registering with said non-conducting portion to interrupt said last circuit, said conductor member being in such driving relation to said timing cam means whereby the circuit is interrupted after said timing cam means has interrupted the output circuit at one of said sets of contacts.

11. A reversing and timing device for a reversible motor, comprising a switch having a motor, a timing element driven thereby and intermittently engageable electrical contact means controlled by said element and connected to said last named motor to energize the same for predetermined time increments of intermittent rotation, a plurality of further intermittently engageable reversing contacts adapted to be connected to said first named motor, and adjustable cam means driven by said last named motor and controlling the periods of electrical engagement of said last named contacts during the increments of rotation of said last named motor, said cam means being adjustable to vary the period of electrical engagement of said last named contacts with reference to said increments of intermittent rotation of the last named motor and thereby varying the period of energization of said first named motor with reference to said time increments,

12. A reversing and timing device, comprising a switch having a motor, a timing element driven thereby and intermittently engageable electrical contact means controlled by said element and connected to said motor to energize the same for predetermined time increments of intermittent rotation, a plurality of further intermittently engageable contacts, and adjustable cam means driven by said last named motor and controlling the periods of electrical engagement of said last named contacts during the increments of rotation of said motor, said cam means being adjustable to vary the period of electrical engagement of said last named contacts with reference to said increments of intermittent rotation of the motor.

13. A reversing and timing device, comprising a switch having a motor, a timing element driven thereby and intermittently engageable electrical contact means controlled by said element and connected to said motor to energize the same for predetermined time increments of intermittent rotation, further intermittently engageable contact means, and adjustable means driven by said last named motor and controlling the periods of electrical engagement of said last named contact means during the increments of rotation of said motor, said last named means being adjustable to vary the period of electrical engagement of said last named contact means with reference to said increments of intermittent rotation of the motor.

14. A motor operated timing and reversing switch of the type described comprising, in combination, a motor, a timing member driven thereby, contacts controlled by said member to start and stop said motor and member after intermittent intervals of operation of predetermined duration, an adjustable cam driven by said motor, and further intermittently engageable contacts controlled by said cam, said cam being adjustable to vary the periods of engagement of said last named contacts for predetermined portions of the intervals of operation of said timing member.

15. A motor operated timing and reversing switch of the type described comprising, in combination, a rotatably driven timing member, means controlled by said member to start and stop the same after intermittent intervals of operation of predetermined duration, an adjustable cam driven in synchronism with said member, and further intermittently engageable contacts controlled by said cam, said cam being adjustable to vary the periods of engagement of said last named contacts for predetermined portions of the intervals of operation of said timing member.

16. In combination with a driven member operable through a predetermined operating stroke, an electric motor, and means operatively connecting said motor to said member to drive the latter, including a yieldable slip connection, an electrical operating circuit and control means for said motor, including a switch device comprising driven adjustable contact means for selectively controlling the period of duration of said circuit in accordance with the actual time normally consumed in said operating stroke, and means for driving said last named means throughout a time cycle at least as great as and inclusive of the period of duration of the circuit con-

trolled by said contact means, the latter being adjustable to vary said last named period within the time limits of said cycle, said yieldable slip connection enabling energization of said motor without resultant comparable operation of the driven member in the event operation of the latter is obstructed intermediate its operating stroke.

17. In combination with a driven member operable through a predetermined operating stroke, an electric motor, and means operatively connecting said motor to said member to drive the latter, including a yieldable slip connection, an electrical operating circuit and control means for said motor, including a switch device comprising driven contact means for determining the period of duration of said circuit in accordance with the actual time normally consumed in said operating stroke, and means for driving said last named means throughout a time cycle at least as great as and inclusive of the period of duration of the circuit controlled by said contact means, said yieldable slip connection enabling energization of said motor without resultant comparable operation of the driven member in the event operation of the latter is obstructed intermediate its operating stroke.

18. In combination with a driven member, an electric motor, and means operatively connecting said motor to said member to drive the latter, including a yieldable connection, an electrical operating circuit and control means for said motor, including a switch device comprising driven contact means for determining the period of duration of said circuit, and means for driving said last named means throughout a time cycle at least as great as and inclusive of the period of duration of the circuit controlled by said contact means, said yieldable connection enabling energization of said motor without resultant comparable operation of the driven member under certain circumstances.

19. In combination with a driven member, an electric motor, and means operatively connecting said motor to said member to drive the latter, including a yieldable connection, an electrical operating circuit and control means for said motor, including a switch device comprising driven adjustable contact means for selectively controlling the period of duration of said circuit, and means for driving said last named means throughout a time cycle at least as great as and inclusive of the period of duration of the circuit controlled by said contact means, the latter being adjustable to vary said last named period within the time limits of said cycle, said yieldable connection enabling energization of said motor without resultant comparable operation of the driven member.

HERBERT CADY BLODGETT.