Sept. 6, 1955 C. C. BAUERLEIN 2,716,996

DISPENSER FOR CONCENTRATES AND THE LIKE

Filed Feb. 10, 1953 2 Sheets-Sheet 1

Fig. 1

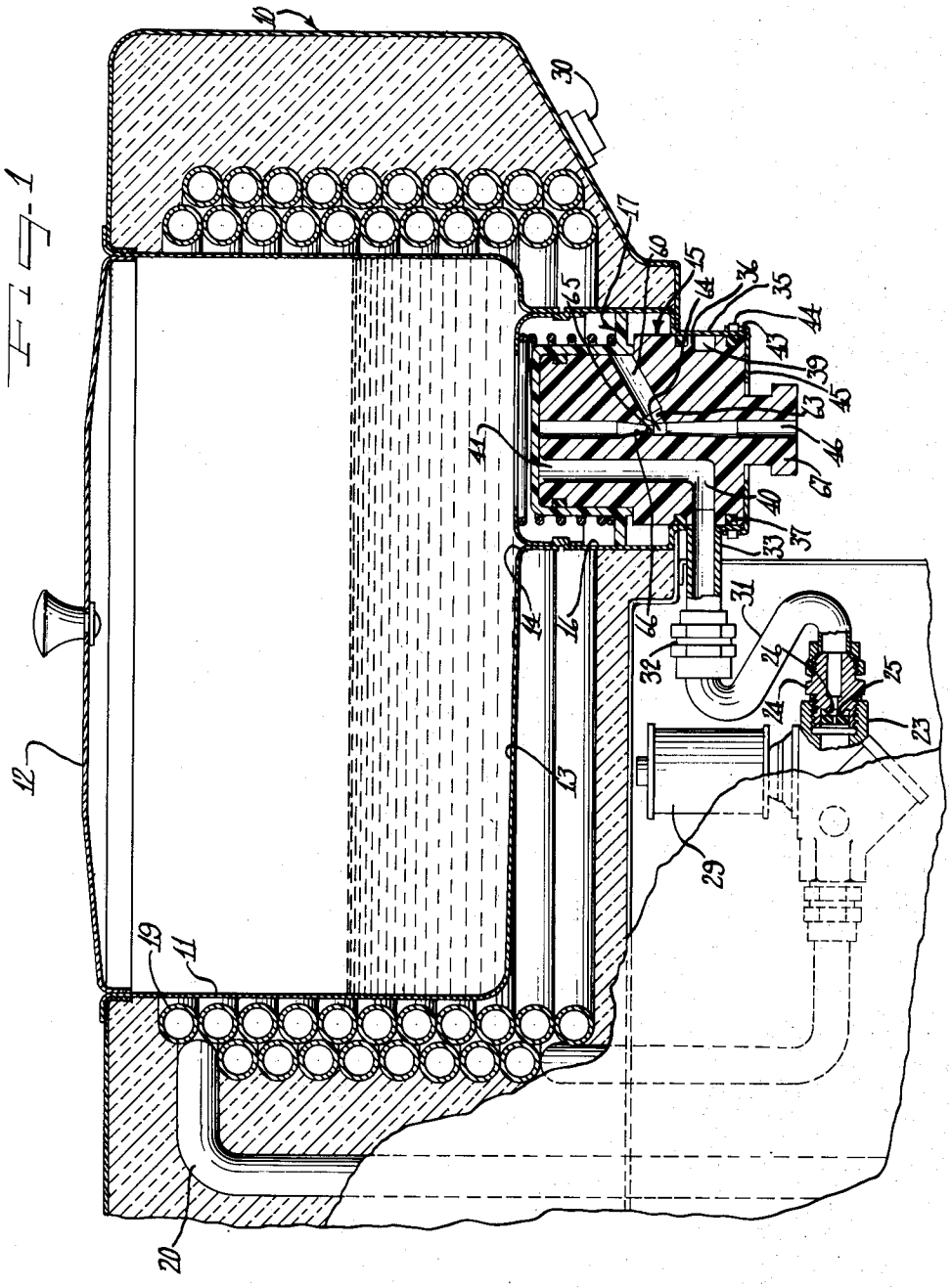

Inventor

Carl C. Bauerlein

by Kill, Sherman, Meroni, Gross & Simpson Attys

Sept. 6, 1955 C. C. BAUERLEIN 2,716,996

DISPENSER FOR CONCENTRATES AND THE LIKE

Filed Feb. 10, 1953 2 Sheets-Sheet 2

Fig. 5

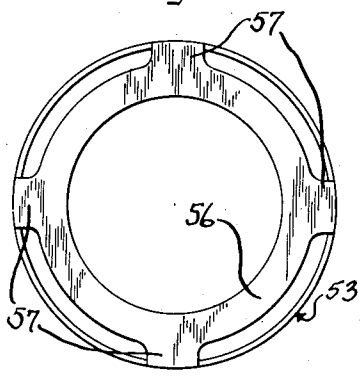

Fig. 3

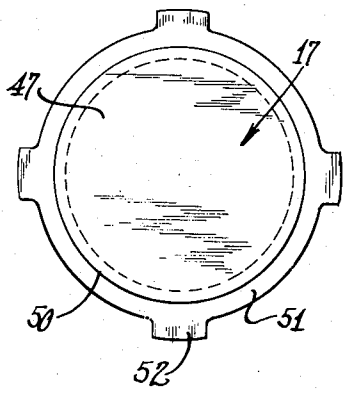

Fig. 2

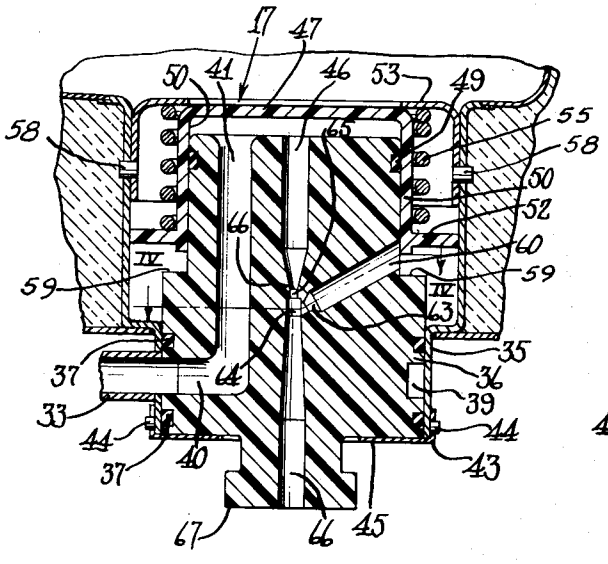

Fig. 4

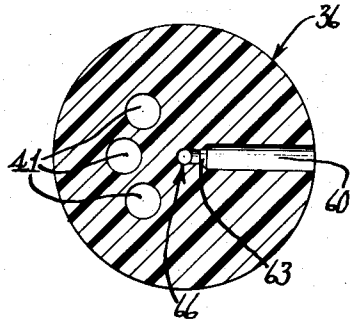

Inventor
Carl C. Bauerlein

by Hill, Sherman, Meroni, Gross & Simpson Attys

United States Patent Office 2,716,996 Patented Sept. 6, 1955

2,716,996

DISPENSER FOR CONCENTRATES AND THE LIKE

Carl C. Bauerlein, Mukwonago, Wis., assignor to The Dole Valve Company, Chicago, Ill., a corporation of Illinois

Application February 10, 1953, Serial No. 336,120

9 Claims. (Cl. 137—98)

This invention relates to dispensers for diluting, mixing and dispensing fluids or concentrates, such as concentrated juices, malts, liquors, colas, flavors and the like.

A principal object of my invention is to provide a novel and improved form of mixing and dispensing valve, particularly adapted for mixing and dispensing concentrates and the like, arranged with a view toward attaining a more accurate mixture and positive control of the dispensed mixture.

Another object of my invention is to provide an efficient form of dispenser valve of a simplified and novel construction and arrangement, wherein operation of the valve is controlled by the flow of the mixing fluid thereinto under pressure.

A further object of my invention is to provide a new and improved form of proportioning valve for mixtures of water and concentrates utilizing the flow of diluting water to open the valve for the flow of concentrate therethrough, and to draw the concentrate thereinto for mixture therewith.

Another object of my invention is to provide a new and improved form of dispensing and proportioning valve for liquids of high specific gravity in which a controlled volume of water under pressure enters a proportioning member for concentrate and water, and a passageway defining valve member closes one end of the proportioning member and defines a passageway between the water inlet and a mixing passageway extending through the proportioning member, and is also moved along the body by water pressure thereon to afford communication of the concentrate with the mixing passageway.

A further object of my invention is to provide a dispenser for concentrates or the like, wherein the concentrate is contained in a tank at atmospheric pressure and is dispensed therefrom through a proportioning valve leading from the chamber by the supply of a constant flow volume of the mixing water under pressure, attained by a constant volume flow control supplying a controlled constant flow volume of water to accurately proportion the mixture of water and concentrate.

Another and important object of my invention is to provide a novel and improved form of dispenser for concentrates and the like, wherein the concentrate is dispensed by the mixing liquid under pressure under the control of a flow control valve and the aspirating effect of a venturi, and wherein the cross-sectional area of the orifice of the flow control for the water and the cross-sectional area of the venturi at the throat thereof are accurately proportioned with respect to each other to attain the desired accurate proportioning of the mixed dispensed liquid.

A further object of my invention is to provide a dispenser for proportioning and dispensing concentrates by mixing with liquids of a low specific gravity by the use of a proportioning valve assembly so arranged that the entire assembly may be removed from outside of the container for the concentrate, making it unnecessary to reach

within the concentrate container to remove the valve for cleaning.

A still further object of my invention is to provide a novel and improved form of dispenser for concentrates and the like, wherein a simplified form of proportioning and dispensing valve is contained in a valve chamber leading from the concentrate tank and is mounted therein for ready removal from the bottom of the tank for cleaning without dumping the concentrate from the dispenser.

Still another object of my invention is to provide a novel and improved form of proportioning valve for proportioning and dispensing liquids of high specific gravity, utilizing a proportioning body having a valve plunger encasing one end of the proportioning body and movable therealong and serving as a valve to control the flow of concentrate into the proportioning body, and as a passageway defining member for the water under pressure to be mixed with the concentrate, and opened by the pressure of the mixing water thereon.

A still further object of my invention is to provide a novel and improved form of dispenser for concentrates from a container open to atmospheric pressure, wherein the concentrate is drawn from the container by the aspirating effect of a controlled flow volume of water under pressure.

These and other objects of my invention will appear from time to time as the following specification proceeds and with reference to the accompanying drawings wherein:

Figure 1 is a fragmentary vertical sectional view taken through a dispenser constructed in accordance with my invention;

Figure 2 is an enlarged transverse sectional view taken through the dispensing and proportioning valve for the dispenser, showing the valve in an open position;

Figure 3 is a top plan view of the valve shown in Figure 2;

Figure 4 is a horizontal sectional view taken substantially along the line IV—IV of Figure 2; and

Figure 5 is a plan view of the retainer for the valve spring.

In the embodiment of my invention illustrated in Figure 1 of the drawings, I have shown a fragmentary section through a dispenser for proportioning and dispensing liquids or concentrates of high specific gravity by liquids of low specific gravity to dilute and mix the concentrates or liquids to the normal consistency of the juice of the fresh natural fruit, food or the like that may be dispensed. The dispenser may include a casing **10** having a container or tank **11** for the concentrate or fluid, mounted therein adjacent the upper portion thereof and open at the top thereof. The tank **11** may be of a generally cylindrical form, closed by a cover **12** and having a sloping bottom **13**, gradually sloping to an opening **14** for a proportioning and dispensing valve **15**.

As herein shown, the opening **14** communicates with an open ended chamber **16**, depending from the bottom of the tank **11** and forming a valve chamber for the proportioning and dispensing valve **15** and a valve plunger **17** thereof.

The tank **11** may be cooled by a refrigerating coil **19**, and may be made from a corrosion-resistant material, such as stainless steel, which besides resisting corrosion of highly acid fruit concentrates, also acts as a conductor for cold, to maintain the concentrate cool in cases where the refrigerating unit may be off. The tank **11** is formed to be free from all shoulders or recesses where bacteria may breed, and is also arranged to contain the concentrate at atmospheric pressure and at the sufficiently low temperature to prevent the breeding of bacteria therein.

The casing **10** may also have a compressor, motor and condenser (not shown) for a refrigerating unit, which may be contained therein and may be connected to the refrigerating coil **19**, to maintain the concentrate at the proper temperature, a desirable temperature for juice concentrates being in the neighborhood of 22° F., although the concentrate may be maintained at higher or lower temperatures, as long as the concentrate may flow relatively freely and is sufficiently cold to prevent the breeding of bacteria. It should here be understood that the freezing temperatures of the juice concentrates are much lower than that of water, the freezing temperature of many concentrated fruit juices being as low as 18° F.

A supply pipe **20** for diluting water may enter the casing **10** through a wall thereof (not shown), and may extend through said casing to a position adjacent the top of the cooling coil **19**. The pipe **20** may then be coiled around the outside of said coil, in spaced relation with respect thereto to maintain the diluting water cool. The supply pipe **20** is shown as being connected at its delivery end with a constant volume pressure operated solenoid controlled delivery valve **23** of a well known form, so not herein shown or described in detail.

At the discharge end of the solenoid valve **23** is a fitting **24** threaded within the discharge outlet of the valve, and having a resilient annular flow control member **25** seated therein. The flow control member **25** is shown as being seated in an annular recessed portion **26** of the fitting, having a generally frusto-conical outlet leading from the valve within which the annulus **25** may flex as the pressure thereon increases. Various forms of flow control members may be substituted for the member **25** to control the flow of water through the valve, to assure that the valve delivers the required constant flow volume of diluting water at the desired temperature for mixing with the concentrates. In the present instance, flow control member **25** is shown as being a resilient flow control annulus, similar to that shown and described in Patent No. 2,389,134, which issued to Clyde A. Brown on November 20, 1945.

The coil **29** for the solenoid operating the valve **23** encircles an armature (not shown) of the valve and is energized upon the pressing of a push button **30** on the front face of the dispenser to open the valve to supply a constant volume of water at the desired pressure to move the valve plunger **17** to an open position and accommodate the flow of concentrate into the proportioning body. A tube **31** leads from the fitting **24** and is connected at its discharge end to a fitting **32** connected to a tube **33** leading into the lower end portion of the valve chamber **16**.

The valve chamber **16** is shown as being of a generally cylindrical form having a reduced diameter discharge end portion **35**, the inside diameter of which is substantially equal to the outside diameter of a proportioning body **36** of the proportioning valve **15**. The proportioning body **36** is likewise shown as being of a generally cylindrical form, fitting in the reduced diameter portion of the valve chamber **16** and sealed thereto on opposite sides of the water inlet into the chamber **16** by sealing rings **37**, **37** to seal water to enter the proportioning body, and to hold water from mixing with concentrate in the valve chamber.

The pipe **33** is shown as registering with an annular passageway **39** extending around the valve body **36** and opening to the periphery thereof. The annular passageway **39** is shown as communicating with a passageway **40** leading into the valve body inwardly of said annular passageway, and communicating with a plurality of pressure passageways **41**, **41** leading therefrom upwardly through the proportioning body and opening through the top thereof.

The proportioning body **36** is shown as being retained within the valve chamber **16** by means of a retainer collar **43** having a bayonet slot therein engageable with pins **44**, **44** projecting outwardly from the reduced diameter portion **35** of the chamber **16** in diametrically opposed directions. The retainer collar **43** is shown as having an inwardly extending annular flange **45** engaging the bottom of the proportioning body **36**, and retaining said body within the chamber **16**.

A central mixing passageway **46** is shown as extending vertically through the proportioning body **36** and opening to each end thereof. The valve plunger **17** is shown as being of a generally cylindrical form with a closed top **47** and enclosing a reduced diameter upper portion of the proportioning body **36** and slidably movable therealong. A sealing ring **49** is shown as being recessed within the proportioning body **36** adjacent the upper end thereof and as having sealing engagement with an inner cylindrical wall **50** of the valve plunger **17**. The valve plunger **17** may thus define a fluid flow chamber, or passageway from the water passageways **41** to the central mixing passageway **46**, for supplying water under pressure thereto, to aspirate concentrate from the tank **11** and to mix therewith in a required proportion.

The valve plunger **17** is shown as having a flange **51** extending outwardly therefrom adjacent the lower end thereof. A plurality of lugs or ears in the form of annular segments **52**, **52** extend outwardly from said flange and slidably engage the inner wall of the proportioning chamber **16** at their outer ends and accommodate the passage of concentrate thereby through the recessed portions thereof.

A retainer cap **53** is shown as being provided to retain the valve plunger **17** within the valve chamber **16** and to form a seat for a spring **55**, biasing the valve plunger **17** into a closed position. As herein shown, the retainer cap **53** has an open central portion with an annular ring **56** spaced inwardly from the wall thereof and connected thereto by ears **57**, **57**, to afford passageways for the concentrate in the tank **11** into the valve chamber **16**.

The retainer cap **53** is shown as being detachably mounted within the concentrate chamber **16** by means of a bayonet joint formed by pins **58**, **58**, extending radially inwardly from the wall of the chamber and engageable with L-shaped slots (not shown) formed in the cap.

The spring **55** is shown as being interposed between the annular ring **56** and the flange **51** of the valve plunger, to bias said plunger into engagement with a shoulder **59** of the proportioning body **36** and block a concentrate passageway **60** leading into said body from the wall thereof, when the spring pressure unbalances the pressure of the water entering the inside of the valve plunger **17** through the passageways **41**.

The concentrate passageway **60** is shown as leading angularly inwardly and downwardly from the outer wall of the proportioning body **36**, adjacent the shoulder **59** thereof, and as having reduced inner end **63**, in the form of a truncated cone, the reduced diameter portion of which communicates with a vacuum chamber **64** on the downstream side of a throat **65** of a venturi **66** in the mixing passageway **46**.

The mixing passageway **46** is shown as leading from the top of the proportioning body **36** downwardly through the center thereof into the base of a truncated cone-like passageway, forming the upstream side of the venturi **66**. The reduced diameter outlet of the truncated cone-like passageway communicates with the throat **65** of the venturi, which in turn leads to the vacuum chamber **64**. An inverted truncated cone-like passageway leads downwardly from the vacuum chamber **64** and communicates with passageway **66** of a uniform diameter and leading outwardly through the bottom of the proportioning body **36**, through a knob **67** projecting downwardly beneath the retainer **45**. The knob **67** affords a means for grasping the body **36** by the hand to remove

the valve from the bottom of the proportioning chamber **16** for cleaning.

The vacuum chamber **64** on the downstream side of the throat **65** of the venturi is shown as being of a larger diameter than the throat of the venturi and is of a sufficient volume to build up a vacuum therein, by the expanding volume of water flowing therethrough as it leaves the throat of the venturi. The cross-sectional area of the throat **66** of the venturi is accurately proportioned with respect to the cross-sectional area of the orifice through the flow control member **25**, the areas of which are determined by the desired proportion of the mixture of concentrate and water. The relationship between the cross-sectional area of the throat **66** and the cross-sectional area of the orifice through the member **25** is extremely critical, and the two cross-sectional areas must be accurately proportioned in order to attain the required proportion of water and concentrate, or other liquid or mixture being dispensed.

Assuming the tank **11** to have concentrate therein of the desired temperature, when it is desired to dispense and proportion the concentrate with a mixing fluid, such as water, the push button **30** may be depressed to open the valve **23**. A uniform volume of water under control of the flow control annulus **25** will then enter the annular passageway **39** of the proportioning body **36** and pass upwardly through the passageways **41, 41** into engagement with the top **47** of the valve plunger **17**. This will move the valve plunger **17** upwardly along the proportioning body against the bias of the spring **55** and open the concentrate passageway **60** for the flow of concentrate thereinto, as shown in Figure 2. The inside of the valve plunger **17** will also define a flow chamber or passageway from the passageways **41, 41** to the central mixing or proportioning passageway **46**. The mixing water under pressure passing through the throat **65** of the venturi **66** creating a vacuum in the vacuum chamber **64** will mix with an aspirate the concentrate through the passageway **60** in a definite proportion, determined by the cross-sectional areas of the orifice of the flow control and the throat of the venturi.

Immediately upon shutting off the valve **23**, as when the finger is removed from the push button **30**, the pressure of water within the valve plunger **17** will drop, the spring **55** will then move the valve downwardly from the position shown in Figure 2 to that shown in Figure 1, positively shutting off the supply of concentrate through the passageway **60**, and preventing the leakage of concentrate therefrom.

When it is desired to remove the proportioning body **36** for cleaning, it is simply necessary to turn the retainer **43** and remove the retainer from the bottom of the chamber **16** and then remove the entire proportioning body **36** therefrom by grasping the knob **67** and pulling the body **36** downwardly out of the proportioning chamber **16**. When this is done, the spring **55** will move the valve plunger **17** downwardly and engage the flange **51** thereof with the shouldered portion of the valve chamber to prevent the leakage of concentrate from the bottom of the valve chamber.

If it should be desired to dump the concentrate from the chamber **11**, it is simply necessary to invert the proportioning body **36** and insert the same within the chamber **16**, and engage the knob **67** of the proportioning body **36** with the wall **47** of the valve plunger **17** and raise the same against the spring **55** until concentrate may pass thereby in the space between the reduced wall of the proportioning body and the reduced diameter portion of the valve chamber **16**. When the proportioning body is in this dumping position, it may be held in this position until all of the concentrate has been dumped from the bottom of the tank.

It should be noted that the proportioning body **36**, as well as the valve plunger **17** may be made from a transparent material such as "Lucite" or glass, which besides being transparent and rendering all of the passageways open to view, to permit ready cleaning thereof, also acts as an insulator and inhibits freezing of the water or concentrate in the passageways therein. It should be understood, however, that while the valve body is shown and preferably described as being transparent and made from a plastic or glass, it need not be transparent and may be made from any other suitable materials.

It will be understood that modifications and variations may be effected without departing from the spirit and scope of the novel concept of the present invention.

I claim as my invention:

1. A proportioning and dispensing valve comprising a proportioning valve body, a fluid passage leading into said valve body from a wall thereof, and opening through the top of said proportioning valve body, a mixing passageway leading through said body and opening to each end thereof, a concentrate passageway leading into said body from a wall thereof and communicating with said mixing passageway, and a valve plunger having a wall extending about said body and a top extending across said wall and closing the top thereof and movable along the wall of said valve body to close said concentrate passageway and block the passage of concentrate into said body, the side wall and top of said valve plunger also defining a flow passageway from said fluid passage to said mixing passageway and opening said concentrate passageway by the pressure of fluid passing through said fluid passage opening through the top of said valve body.

2. A proportioning and dispensing valve particularly adapted to proportion and dispense concentrates comprising a proportioning body having a mixing passageway leading vertically therethrough and having a venturi therein having a restricted throat, a concentrate passageway leading through a wall of said proportioning body to said venturi and communicating therewith on the downstream side of the throat thereof, a water passageway leading into said proportioning body through a wall thereof, and opening to the top thereof, a movable valve plunger extending along the wall of said proportioning body and over the top thereof and defining a fluid passageway from said water passageway to said mixing passageway when in one position and blocking the passage of fluid through said concentrate passageway when in another position, means biasing said valve plunger along said proportioning body into position to block the passage of concentrate into said valve body, said plunger being moved against its bias by the pressure of water acting thereon, and means conducting water to said water passageway including a constant volume flow control member having a deformable orifice having a cross-sectional area directly proportional to the cross-sectional area of the throat of said venturi, to assure a uniform mix of the dispensed fluid regardless of pressure variations at the source of supply of water to said body.

3. In a proportioning and dispensing valve for concentrates, a proportioning body having a mixing passageway leading vertically therethrough, having a venturi therein having a restricted throat, a generally cylindrical valve plunger slidably mounted on said proportioning body for movement therealong and closing the top thereof, a concentrate passageway leading into said proportioning body through a wall thereof and communicating with said venturi on the downstream side of the throat thereof, spring means biasing said plunger into position to block the passage of concentrate into said concentrate passageway, said plunger moving against the bias of said spring means by the pressure of water thereon, and means controlling the supply of water under pressure to said body to move said plunger against the bias of said spring means and provide a constant flow of water for mixture with the concentrate, including a constant volume flow control annulus, the orifice of which has a cross-sectional area directly proportional to the cross-sectional area of the throat of said venturi.

4. A proportioning valve for concentrates and the like comprising an open ended valve chamber, a proportioning body mounted in said chamber, an inlet for water leading into said chamber, an inlet for water in said body registering with said water inlet leading into said chamber and opening to the top of said body, an inlet for concentrate leading through a wall of said body, a mixing passageway leading through said body and communicating with said inlet for concentrate, a passageway defining valve member slidably mounted on said body and defining a fluid passageway from said water inlet in said body to said mixing passageway, and means biasing said valve member to block the flow of concentrate into said body, said valve member moving by the pressure of fluid thereon against the bias of said biasing means to admit concentrate into said chamber.

5. In a proportioning valve for concentrates and the like, an open ended valve chamber, a proportioning body mounted in said chamber, an inlet for water in said proportioning body and opening to the top thereof, an inlet for concentrate leading through a wall of said proportioning body to the interior thereof, a mixing passageway leading vertically through said proportioning body and intersecting said inlet for concentrate, a passageway defining member slidably mounted on said body and closing the upper end thereof and defining a passageway for water from said water inlet to said mixing passageway, spring means biasing said member to block the passage of concentrate into said body, and valve means supplying water under pressure to said chamber to move said passageway defining member against the bias of said spring means and admit concentrate to said body, and to aspirate concentrate from said body and mix with the same.

6. In a proportioning valve for concentrates and the like, an open ended valve chamber, a proportioning body in said chamber, an inlet for water leading into said chamber, an inlet for water leading into said body and communicating with said inlet leading into said chamber and opening to the top of said proportioning body, an inlet for concentrate leading through a wall of said proportioning body to the interior thereof, a mixing passageway leading vertically through said body, said mixing passageway having a venturi therein having a restricted throat and communicating with said inlet for concentrate on the downstream side of the throat thereof, a passageway defining valve member slidably mounted on said proportioning body and closing the upper end thereof and defining a passageway from said water inlet in said body to said mixing passageway, spring means biasing said member into position to block the passage of concentrate into said proportioning body and mixing passageway, and valve means admitting water under pressure to said chamber to move said valve member by the pressure thereon into position to admit concentrate into said proportioning body, said valve means having a resilient annular flow control member associated therewith, the orifice of which has a cross-sectional area directly proportional to the cross-sectional area of the throat of said venturi, to afford a predetermined proportion of the mix of concentrate and water.

7. In a proportioning valve for concentrates and the like, an open ended proportioning chamber, a proportioning body mounted in said chamber, a retaining member detachably mounted at the lower end of said chamber for detachably retaining said proportioning body therein and accommodating ready removal thereof for cleaning from the bottom of said chamber, a cylindrical valve member mounted on said body and closing the top thereof, a passageway for concentrate leading from the wall of said body to the interior thereof, a spring biasing said valve member in position to close said passageway, a mixing passageway leading through said body, and a passageway for water leading into said body and opening to the top thereof for moving the valve member against the bias of said spring and supplying water to said mixing passageway to mix with and aspirate the concentrate therethrough.

8. In a proportioning valve for concentrates and the like, an open ended valve chamber, a proportioning body mounted in said chamber, a retainer mounted on the lower end of said chamber and detachably securing said body thereto, a valve plunger mounted on said body for movement therealong and closing the top thereof, a passageway for concentrate leading into said body from a wall thereof, a mixing passageway leading through said body and communicating with said passageway for concentrate, a retainer detachably mounted in the upper end of said valve chamber, and open for the passage of concentrate into said chamber, a spring interposed between said retainer and valve plunger and biasing said plunger into position to block the passage of concentrate into said body, said valve plunger moving by the pressure of water thereon against the bias of said spring to admit concentrate to said body, said valve plunger having an annular flange projecting from the wall thereof and said chamber having a shouldered portion adapted to be abutted by said flange upon the removal of said body from said chamber, and forming a valve seat engaged by said flange by the bias of said spring, to prevent the dumping of concentrate from said chamber when said proportioning body is removed therefrom.

9. A device for mixing and dispensing concentrates and the like comprising a concentrate tank, an open ended valve chamber leading from said tank, a proportioning body detachably mounted in said chamber, means on the lower end of said chamber detachably mounting said proportioning body therein and accommodating removal of said body from said chamber from the lower end thereof, a valve plunger movable along said proportioning body and closing the upper end thereof, a retainer at the upper end of said chamber, a spring interposed between said retainer and plunger and biasing said plunger downwardly along said proportioning body, a passageway for concentrate leading into said body from a wall thereof and closed by said valve plunger, a mixing passageway leading directly through said proportioning body and intersecting said concentrate passageway, and a passageway for water leading into said proportioning body and opening to the top thereof for supplying water under pressure for moving said valve plunger against said bias of its spring to admit concentrate to said body, and supplying water to said mixing passageway for proportioning with the concentrate and aspirating and dispensing the same through the bottom of said body.

References Cited in the file of this patent

UNITED STATES PATENTS

2,415,861	Bauerlein	Feb. 18, 1947
2,509,124	Bauerlein	May 23, 1950