S. PENNOCK.

ROAD-SCRAPERS.

No. 194,367. Patented Aug. 21, 1877.

Fig. 1.

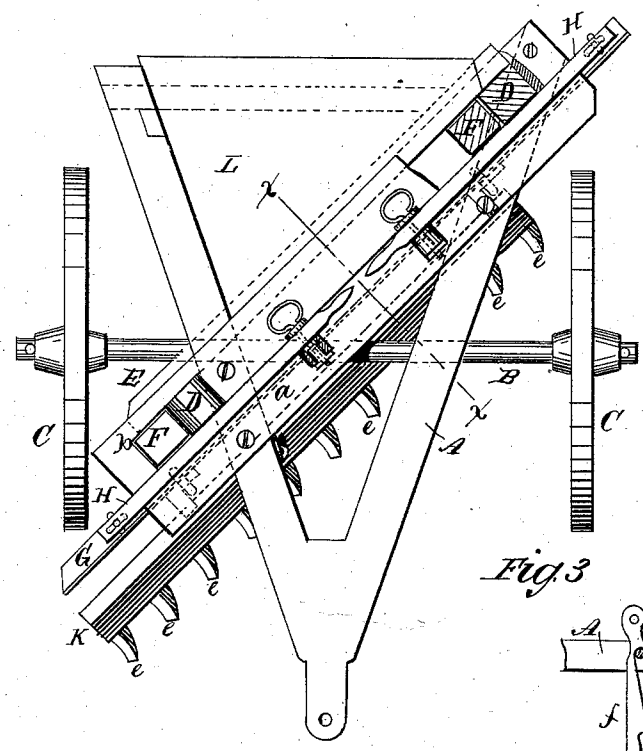

Fig. 3

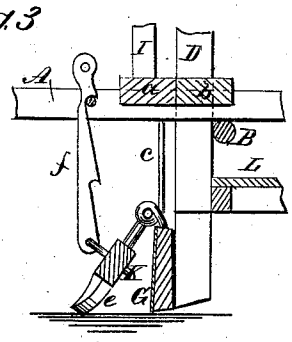

Fig. 2

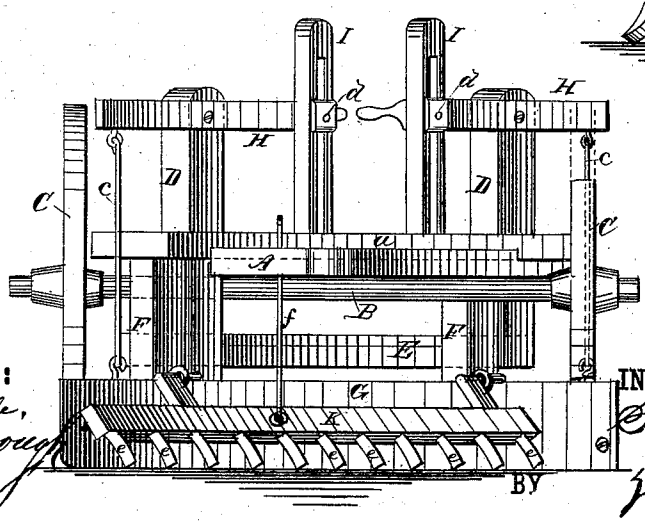

WITNESSES:

F. McArdle,

J. H. Scarborough

INVENTOR:

S. Pennock

BY

Munn & Co

ATTORNEYS.

N. PETERS, PHOTO-LITHOGRAPHER, WASHINGTON, D. C.

UNITED STATES PATENT OFFICE.

SAMUEL PENNOCK, OF ITHACA, NEW YORK.

IMPROVEMENT IN ROAD-SCRAPERS.

Specification forming part of Letters Patent No. **194,367**, dated August 21, 1877; application filed June 18, 1877.

To all whom it may concern:

Be it known that I, SAMUEL PENNOCK, of Ithaca, in the county of Tompkins and State of New York, have invented a new and Improved Road-Machine, of which the following is a specification:

Figure 1 is a plan view of my improved road-machine. Fig. 2 is a front elevation. Fig. 3 is a transverse section on line *x x* in Fig. 1.

Similar letters of reference indicate corresponding parts.

My invention relates to machines for scraping and leveling roads; and it consists in a scraper supported by a suitable frame carried by wheels, and adjustable as to its height, and in a toothed bar carried in front of the scraper, to be used or not, as occasion may require.

In the drawing, A is a triangular frame, secured to the axle B, which is supported by wheels C. Two bars, *a b*, are secured to the frame A, being placed diagonally on the frame, and two vertical standards, D, are fastened between the bars *a b*, and extend downward below the axle B, and to them a bar, E, is attached, which extends a short distance beyond the standards, to support the guide-pieces F that are pivoted to the scraper-bar G. The pieces F extend upward through the bars *a b* at the front side of the standards D. A lever, H, is pivoted to each of the standards D, and connected by rods *c* with the ends of the scraper-bar G. The levers H are each provided with a clamping-screw, *d*, by which they are clamped to the slotted standards I, that are pivoted to the bar *a*. By means of the levers H either end of the scraper-bar G may be raised or lowered. K is a bar, having attached to it the curved teeth *e*, which are set diagonally on the bar. This bar is hinged to the scraper-bar G, and is provided with a rod, *f*, by which it may be raised and sustained.

The front end of the triangular frame A is connected with the front axle of a common wagon by means of the king-bolt, and the machine is drawn forward by any required number of horses.

By operating one or the other of the levers H the end of the scraper-bar may be raised, so that by driving up on one side of the road and down on the other the road may be ridged or rounded, as may be desired, or by arranging the scraper-bar in a horizontal position the road may be made level. The bar K is adjusted so that its teeth *e* cut away the projecting and uneven portions of the surface before it is scraped.

The platform I, upon which the driver stands, is supported partly by bar E and partly by a light frame suspended from the triangular frame A.

The bar K may be placed either before or behind the scraper-bar, and it may be adjusted by means of a lever, or in any other convenient way.

Having thus described my invention, I claim as new and desire to secure by Letters Patent—

1. The toothed bar K, pivoted to the scraper G, and connected with the pivoted rod *f*, substantially as and for the purpose specified.

2. The triangular frame A, bars *a b*, slotted pivoted standards I, standards D, in combination with the scraper-bar G, rods *c*, and levers H, substantially as shown and described.

SAMUEL PENNOCK.

Witnesses:
CHS. G. DAY,
CHARLES J. PENNOCK.