No. 862,620. PATENTED AUG. 6, 1907.

F. EGERSDÖRFER.

ROTARY ENGINE.

APPLICATION FILED MAY 15, 1906.

Fig. 1

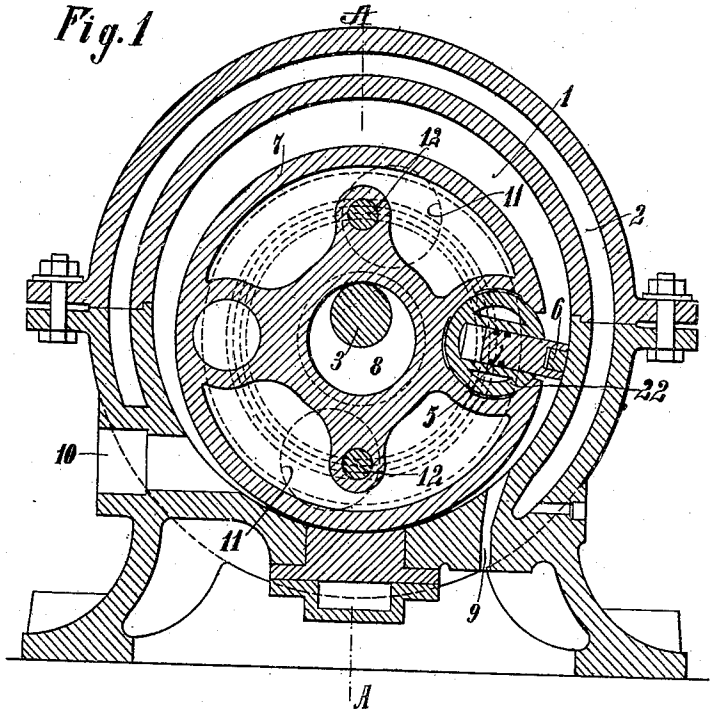

Fig. 2

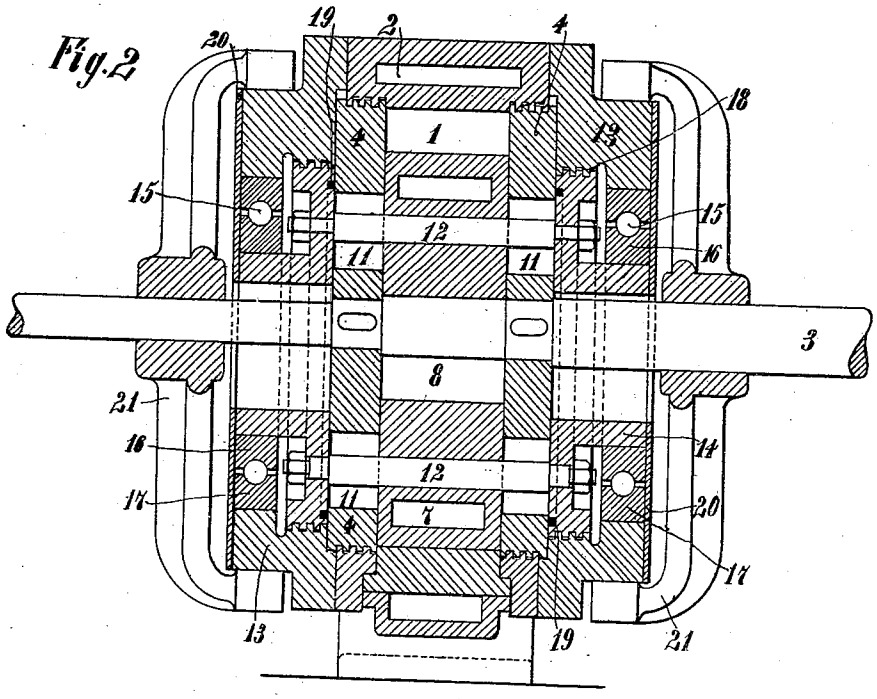

Witnesses.
Otto König
August Fischer

Inventor:
Fritz Egersdörfer

THE NORRIS PETERS CO., WASHINGTON, D. C.

UNITED STATES PATENT OFFICE.

FRITZ EGERSDÖRFER, OF BARMEN, GERMANY, ASSIGNOR OF ONE-HALF TO FRITZ LINDER, SR., OF BARMEN, GERMANY.

ROTARY ENGINE.

No. 862,620. Specification of Letters Patent. Patented Aug. 6, 1907.

Application filed May 15, 1906. Serial No. 316,921.

To all whom it may concern:

Be it known that I, FRITZ EGERSDÖRFER, a citizen of the German Empire, residing at Barmen, in the Province of Rhenish Prussia and Kingdom of Prussia, Germany, have invented certain new and useful Improvements in Rotary Engines, of which the following is a specification.

Engines having a rotating piston are known in which the latter is joined rigidly with disks running concentrically in the cylinder, while the piston-drum is arranged eccentrically in the cylinder to form the working space for the pressure medium.

The above-described build of engines has, as opposed to other builds, the advantage that the piston always slides along in the same radial position on a circle on the side of the cylinder and an effective tightening or closely fitting joint can thus be obtained with relatively simple means, just as also the new circular cylinder can be made more easily and also more exactly. In the engines of this kind known hitherto the power received by the piston is transmitted by means of the piston-drum to the driving shaft rigidly connected with this and accordingly likewise mounted eccentrically to the cylinder.

Now the present invention has for its object an engine in which the power is transmitted by means of strong disks fitted to the cylinder arranged laterally of the piston-drum directly on the driving shaft which is engaged firmly with said disks, and in said engine besides other new effects the above-mentioned advantages are also-obtained. In known engines of this kind the driving shaft, piston drum and power transmission disks form a whole rotating eccentrically in the cylinder and the piston is moved to and fro in a transverse slot of the drum and in diametrical grooves of the power-transmitting disks. According to the present invention, however, the pistons are rigidly engaged with power-transmitting disks rotating the driving shaft, while the piston-drum is disengaged from the driving shaft and is guided into the required eccentric position in the cylinder by being connected by means of bolts with rings, said bolts passing through the power-transmitting disks in correspondingly wide openings, said rings being revolubly held outside the power-transmitting disks in a guide running correspondingly eccentric to the cylinder. Thus according to the present invention the cylinder has a circular form, so that it can be made easily and with great exactness, and the pistons are moved along in always the same radial position at the side of the cylinder, so that a faultless fitting is possible with simple means. Further, by means of this new engine the important advantage is obtained that the parts receiving and transmitting the power, *i. e.* pistons, power-transmitting disks and driving shaft form one rigid whole whereby the internal resistances of the engine are very decidedly reduced and the moment at any place always remains the same in every position of the piston. In order to effect an effective fitting of the cylinder in all cases in this kind of build of engine, in respect of the spaces containing the guides for the piston-drum, it is preferably arranged that the piston-drum is not held directly in the rings, but in annular pieces lying outside the power-transmitting disks, said annular pieces being only held revolubly on their part in the above-mentioned guides. These annular pieces are fitted in a similar manner to the disks against the cylinder side or end and moreover also against the disks themselves, so that a decided strengthening and absolutely sure close and tight joint is obtained.

More particularly the present invention relates to improvements in engines with rotating pistons and laterally rotating disks and in order that the details of construction and action of my invention may be more clearly understood, reference is made to the accompanying drawings, in which:

Figure 1 is a transverse sectional elevation of the engine, Fig. 2 is a longitudinal sectional elevation on the line A—A of Fig. 1.

In the cylinder 1 forming a complete cylindrical working space which can be provided with a jacket 2 both the fitted and power-transmitting disks 4 are arranged keyed on the engine-shaft 3 and fitted to the cylinder by means of a so-called labyrinth-joint or thrust-bearing. Between these a piston 5, by way of example rigidly connected with them, is provided crossing transversely the working-space of the cylinder 1. The piston moves along with its outer face continuously in the same position relatively to the face of the cylinder and is fitted to this by means of an inclosed piece 6 with broad bearing surfaces. Between both disks 4 is the piston-drum 7 through which the shaft 3 runs free in a central boring 8, said drum 7 being arranged eccentrically in the cylinder 1 in such a way that it is in contact with the cylinder-casing between the inlet-port 9 and outlet-port 10 for the pressure medium. Said piston-drum is held by means of bolts 12 passing transversely through it in the holes 11 through the disks 4 in two annular pieces 14 lying outside the disks 4 in corresponding places cut away in the cylinder cover 13. The bolts 12 are reduced to act as distance pieces for these annular pieces 14. These annular pieces 14 concentric to the piston-drum 7 are guided in grooves in the cylinder cover 13 which are eccentric corresponding to the cylinder, namely, in the example shown they run on balls 15, the inner ball-races 16 engaging with the annu-

lar pieces 14, while the outer ball-races 17 are mounted in the cylinder cover 13. Again, the annular pieces 14 are made to fit closely and tightly against the cylinder cover by means of labyrinth-joints 18 and moreover also against the disks 4 by means of joints 19, so that a thoroughly sure fitting of the engine is obtained. The cylinder covers 13 may be covered outside by disks 20 and may carry the shaft 3 by means of cross-arms 21 suitably arranged on it.

By means of the above-described annular guiding it is obtained that the piston-drum 7, taken by the piston 5 guided in a groove of the same by its rotary motion, always slides on the cylinder between the inlet and outlet ports, 9 and 10, and makes a close fitting joint in such places. In its rotation therefore, it allows the piston 5 lying entirely in the drum at the deepest position to come forward or out more and more, so that it offers an increasingly great working surface to the pressure medium and it allows said piston to retreat again on the last part of its revolution. In this motion the piston 5 which is arranged radially to the disks is only set radially to the drum 7 in its lowest position and in the position displaced 180° thereto, *i. e.* if the central point of the cylinder and of the piston drum coincide with the longitudinal axis of the piston. In all other positions the piston moves more or less more to the one or other side out of the radial direction of the drum 7; thus it executes relatively to this in a certain degree a pendulum motion. In order to render this motion possible for it, it is not guided directly in a radial groove of the drum itself, but in a like groove of a cylindrical inserted piece 22 which lies in a likewise cylindrical transverse groove of the drum 7 and can revolve therein. This engagement of the piston with the drum is in itself not new.

The bolts 12 holding the piston-drum 7 describe circular or elliptic courses in their motion relatively to the disks 4; the openings 11 in the disks 4 must be chosen correspondingly; these holes are preferably made circular of such diameter that the bolts can freely move therein.

While I have described in the foregoing specification the construction of parts preferred I am aware that numerous changes of construction may be made without departing from the spirit and scope of my invention, and I therefore do not wish to be understood as limiting myself by the positive terms employed in connection with the description, excepting such as the state of the art may require.

Having now explained the nature of my invention I declare that what I claim and desire to secure by Letters Patent is:

1. In a rotary engine the combination with a cylindrical shell (1) surrounded by a jacket (2) of a shaft (3) fitted concentrically in the cylinder and journaled in bearings (21) carried by the cylinder covers (13), power transmitting disks (4) keyed rigidly to said shaft (3), a piston drum (7) between said disks (4) mounted eccentrically to the shaft (3) and cylinder (1) respectively, so as to rest with its lower side upon the cylinder surface, a central boring (8) in said piston drum allowing the shaft (3) to pass freely through the drum, annular pieces (14) outside of said power transmitting disks (4) concentric with the said piston drum (7) and fitted tightly to the cylinder covers (13), bolts (12) passing axially through the piston drum and through the disks (14) and also through said annular pieces (14) connecting the same rigidly to the piston drum (7), but passing freely through large holes (11) in the power transmitting disks (4), a cylindrical piece (2) fitted revolubly in a corresponding transverse groove in the piston drum, a piston (5) rigidly connected to said power transmitting disks and capable of sliding radially in a corresponding slot of said cylindrical piece (22) so as to be able to take up the pressure from the pressure medium and transfer it to the shaft (3) while sliding along tightly on the inner surface of the cylinder.

2. In a rotary engine the combination with a cylinder (1), having covers (13) of a shaft (3), power transmitting disks (4) keyed to said shaft, a piston drum (7) between said disks, a cylindrical piece (22) fitted revolubly in said piston drum, a piston (5) movable radially in said cylindrical piece (22) and rigidly connected to said power transmitting disks, the combination of annular pieces (14), bolts (12) passing freely through holes (11) in said power transmitting disks and connecting rigidly the piston drum (7) with said annular pieces, ball races (16) guiding said annular pieces in grooves of the cylinder covers (13), joints (18) and (19) respectively forming a steam-tight joint between said annular pieces (14) and the cylinder covers (13) and the power transmitting disks (4) respectively, steam inlet and exhaust ports (9, 10 respectively) right and left respectively of the line of contact between the piston drum and the shell of the cylinder (1), and bearings (21) carrying the said shaft (3).

In testimony whereof I have affixed my signature in presence of two witnesses.

FRITZ EGERSDÖRFER.

Witnesses:
OTTO KÖNIG,
AUGUST SIEPER.