March 19, 1968 L. VAN DALEN ETAL 3,373,639

AUTOMATICALLY ADJUSTABLE SOCKET WRENCH

Filed June 22, 1967

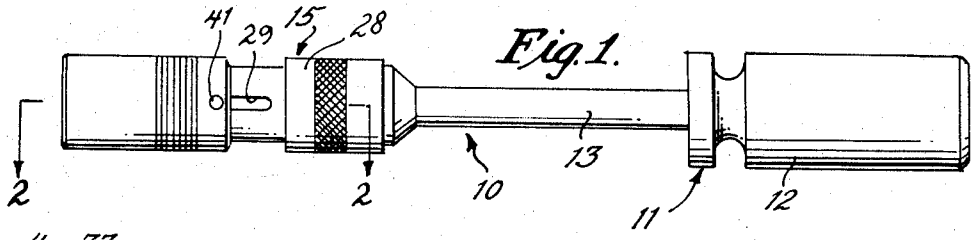

Fig. 1.

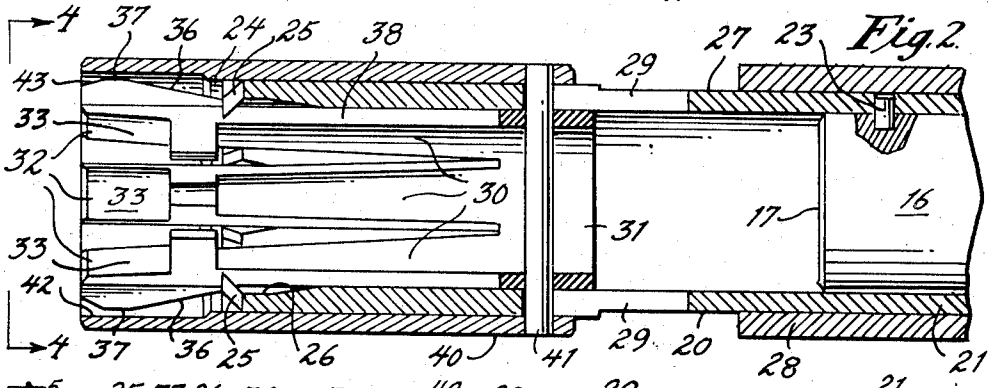

Fig. 2.

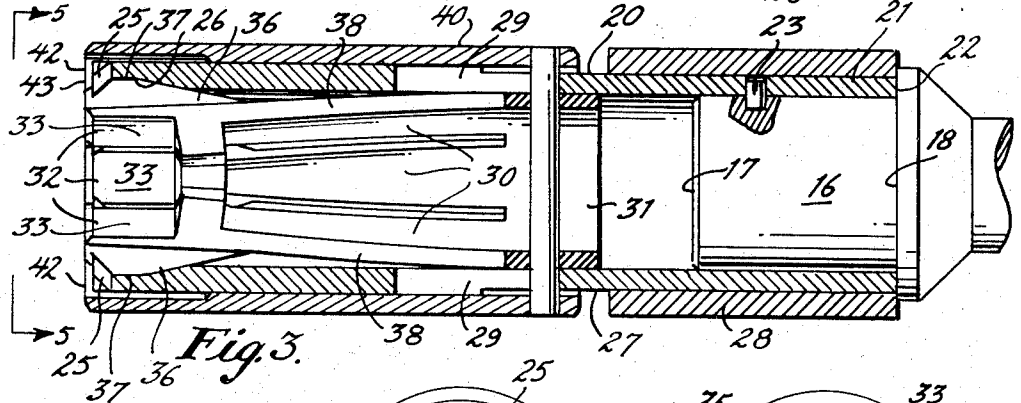

Fig. 3.

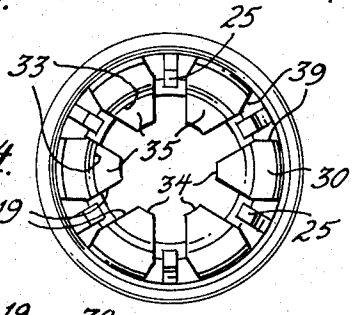

Fig. 4.

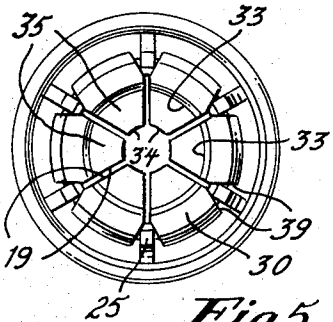

Fig. 5.

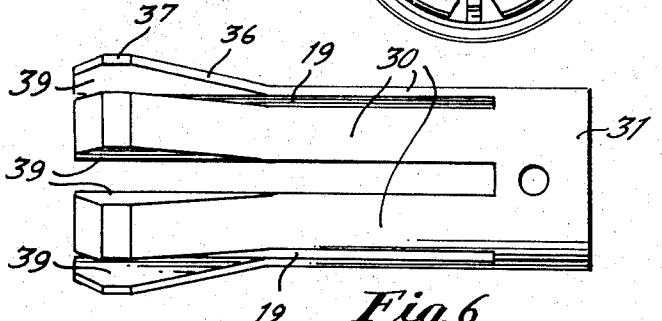

Fig. 6.

INVENTORS.
HORACE C. DISSTON, JR.
LEONARD VAN DALEN
BY Robert K. Voutie
ATTORNEY.

United States Patent Office 3,373,639 Patented Mar. 19, 1968

3,373,639

AUTOMATICALLY ADJUSTABLE SOCKET WRENCH

Leonard Van Dalen and Horace C. Disston, Jr., Westmont, N.J., assignors to Seaboard Tools, Cherry Hill, N.J., a corporation of New Jersey

Continuation-in-part of application Ser. No. 524,205, Feb. 1, 1966. This application June 22, 1967, Ser. No. 647,979

6 Claims. (Cl. 81—112)

ABSTRACT OF THE DISCLOSURE

The instant invention is essentially concerned with an automatically adjustable socket wrench including a plurality of cylindrically arranged jaws retractably slidable into a generally cylindrical closer for radial contraction, and extendible therefrom for radial expansion, and wherein the closer is provided with internal projections entering between adjacent jaws, and the jaws are configured to avoid overstressing the jaws and the projections, whereby reaction torque is effectively distributed over the structure.

Cross-references to related applications

This application is a continuation-in-part of our copending prior application Ser. No. 524,205, filed Feb. 1, 1966, now Patent No. 3,339,439.

Background of the invention

While the device of said copending patent application has been found highly advantageous in use, and is achieving broad commercial acceptance, it has been found that certain improvements serve to facilitate manufacture and assembly, as well as durability and long useful life.

Summary

It is an important object of the present invention to provide an adjustable socket wrench of the type described, which is automatically adjustable, and wherein manufacture and assembly are facilitated, as well as the useful life extended, by the construction and arrangement of jaws wherein the jaws are contractible to an adjacent side-by-side relation, while configured to receive between adjacent jaws internal projections of the closer, for more evenly distributing reaction torque to minimize local stresses and possible damage.

It is a further object of the present invention to provide an adjustable socket wrench having the advantageous characteristics mentioned in the preceding paragraph, wherein the internal projections are of increased size for resisting greater forces and the jaws are beveled for providing additional clearance for the projections and for minimizing jaw-to-protection pressure, while maintaining the jaws in their proper spaced relation under all conditions of contraction and expansion.

Other objects of the present invention will become apparent upon reading the following specification and referring to the accompanying drawing, which form a material part of this disclosure.

The invention accordingly consists in the features of construction, combinations of elements, and arrangements of parts, which will be exemplified in the construction hereinafter described, and of which the scope will be indicated by the appended claims.

Brief description of the drawing

FIGURE 1 is a side elevational view showing an automatically adjustable socket wrench constructed in accordance with the teachings of the instant invention.

FIGURE 2 is a longitudinal sectional view taken generally along the line 2—2 of FIGURE 1, enlarged for clarity, and showing the jaws in an extended, radially expanded position.

FIGURE 3 is a longitudinal sectional view similar to FIGURE 2, but illustrating the jaws in their retracted, radially contracted position.

FIGURE 4 is an end view taken generally along the line 4—4 of FIGURE 2.

FIGURE 5 is an end view taken generally along the line 5—5 of FIGURE 3.

FIGURE 6 is a side elevational view showing the jaw structure apart from the remainder of the wrench.

Description of the preferred embodiment

Referring now more particularly to the drawings, and specifically to FIGURE 1 thereof, the wrench structure is there generally designated **10**, and is constituted of handle means **11** including a handle proper or handgrip member **12**, and a shank **13** extending from the handgrip. In use a nut-and-bolt driver, the handle member **12** may be of elongate configuration essentially similar to that of a conventional screwdriver, and the shank **13** may extend longitudinally from one end of the handle, being rigidly secured thereto. Of course, other handle means may be employed, as desired, say for achieving increased torque, accommodating to conditions of limited rotation, or other.

From the extending end of shank **13**, remote from handle **12**, there extends the socket structure, generally designated **15**. This structure is best seen in FIGURES 2–6.

The shank **13** is illustrated in FIGURES 2 and 3, as having a longitudinally extending, generally cylindrical distal end portion **16** remote from the handle **12**. The shank end portion **16** has a generally circular end face **17**, facing away from the handle, and a circumferential or annular shoulder **18** is provided about the end portion **16** at a location spaced inward from the end face **17**.

A hollow, open-ended, generally cylindrical or tubular member **20** has one end portion **21** snugly engaged about the cylindrical shank end portion **16**, with an end edge **22** of the tube **20** in abutting engagement with the shoulder **18**. The tubular member **20** is suitably fixed to the shank end portion **16** by any suitable means, such as a transverse pin **23** extending through the tubular-member end portion **21** into the shank end portion **16**.

The tubular member **20** serves as a closer, as will appear more fully hereinafter, and extends longitudinally of the shank **13** beyond the shank end face **17**, having its extending or outer end open, as at **24**. At circumferentially spaced locations about the outer end **24** of tubular closer **20** are formed a plurality of internal projections or lugs **25**, being six in number in the illustrated embodiment. The internal projections or lugs **25** may be defined by circumferentially spaced inwardly struck portions of the closer end **24**. The internal surface of the closer **20** may be generally cylindrical, and may be formed adjacent to its outer end **24** with an internal circumferential recess or groove, as at **26**. Externally, adjacent to the inner closer end **22**, the inner closer end portion **21** may be reduced, as at **27** for rotatably receiving a rotary or swivel collar **28**. The closer **20** may be provided intermediate its ends, in spaced relation between the external reduced portion **27** and internal recess **26**, with a pair of diametrically opposed, longitudinally extending thru slots **29**.

Internally of the closer **20**, see FIGURE 3, there is located a generally cylindrical array of elongate jaws **30**. The array of jaws **30** is arranged concentrically within the closer **20**; and, the inner ends of the jaws are connected together to maintain the same in their cylindrical

array while affording longitudinal movement to the jaws relative to the encompassing closer **20**. More particularly, the inner ends of jaws **20** are all connected to or integral with an annular connecting member **31** mounted slidably within the closer **20**. Viewed otherwise, the several jaws **30** extend longitudinally outward from circumferentially spaced locations on the connecting member **31**. The jaws **30** terminate at their outer ends in respective jaws proper **32** having radially inwardly facing jaw faces **33**. The jaw faces **33** are generally arcuate, best seen in FIGURES 4 and 5, having their center of curvature generally coaxial with the annular jaw array. Further, each jaw **30** is provided on its inner side with a radially inward projection, as at **34**, adjacent to and spaced inward from the respective outer jaw end. The internal projections **34** each define an abutment surface **35** extending radially inward from the inner end of a respective arcuate jaw face **33**, approximately normal thereto, and facing longitudinally outward away from the shank **13**. The outer side of each jaw **30** is provided with a longitudinally extending oblique surface **36** which tapers in the longitudinally inward direction. More specifically, the external jaw surfaces **36** each extend from a medial jaw region obliquely outward, both longitudinally and radially, terminating in an outer generally flat holding surface **37**. In effect, this oblique external jaw surface **36** serves to thicken the outer jaw regions, particularly adjacent to the radial projections **34** and jaws proper **32**. Inward of the longitudinally oblique, radially outer jaw surfaces **36**, the jaws **30** may be relatively thin, as at **38**, affording a desired degree of resilient flexibility.

The condition of jaws **30** shown in FIGURE 2 may be the rest condition or relatively unstressed condition, with the jaws proper **32** radially apart from each other or expanded. In this condition the jaw faces **33** may diverge slightly in the longitudinally outward direction, say about six degrees. The jaw condition shown in FIGURE 3 is that of a relatively stressed condition, the inner jaw regions **38** being resiliently deflected inward toward each other to contract the jaws proper **32** radially inward toward each other. In this contracted jaw condition the jaw faces **33** may define circumferentially spaced segments of a cylinder.

The adjacent sides or facing side surfaces **19** of the jaws **30** extend generally radially of the cylindrical jaw configuration, being movable with the jaws between a relatively spaced relation in the expanded jaw condition of FIGURE 2, and an adjacent facing relation in the contracted, side-by-side condition of the jaws **30** in FIGURE 3. However, even in the contracted condition of FIGURE 3, the adjacent facing side edges or surfaces **19** of adjacent pairs of jaws **30** are spaced apart for receiving therebetween, the corners of a nut or bolthead, or the like. However, the radially outer portions of the side jaw surfaces **19** are advantageously cut away, chamfered or beveled, as at **39**. The adjacent cutouts or bevels **39** of adjacent jaws **30** combine to define an opening therebetween adapted to receive the internal projections or tits **25**, even in the fully contracted position of the jaws **30**. Further, the longitudinally extending space or groove defined by adjacent bevels **39** permits the relatively sturdy projections **25** to more evenly distribute reaction torque, minimizes the pressure between engaged jaw and projection pairs and obviates the possibility of malfunction, as well as facilitating manufacture and assembly. This construction may also be observed in FIGURE 6.

Circumposed about the tubular closer **30** is a generally cylindrical or tubular, open-ended slider or actuator **40**. The tubular actuator **40** is longitudinally slidable on the closer **20**, and a pin **41** may extend diametrically across the inner end region of actuator **40**, slidably through slots **29**, to constrain the actuator to limited longitudinal sliding movement. Further, the pin **41** extends diametrically through the jaw-connecting member **31**, so that the jaws **30** are constrained to longitudinal movement with the slider or actuator **40**. If desired, the outer end region of the cylindrical actuator **40** may be internally recessed, as at **42**, and the slider terminates at its outer end **43** adjacent to the outer ends of jaws **30** to protectively encompass the latter.

It will now be apparent that, upon manual actuation of the slider **40**, as between the extended and retracted positions of FIGURES 2 and 3, the outer ends of jaws **30** are extended beyond the outer end of closer **24**, and retracted internally within the closer. Upon this relative extension and retraction of jaws **30**, the internal projections or lugs **25** each engage between an adjacent pair of jaws, particularly between the adjacent beveled surfaces **29**, while the outer jaw surfaces **36** ride on the outer closer end **24**, to effect by camming action, radial expansion and contraction of the jaws proper **32**, respectively. In the fully contracted position of jaws proper **32**, the nontapering outer jaw surfaces **37** may engage in the closer end portion recess **26**, as shown in FIGURE 3.

If desired, a coil compression spring may be interposed between shank end **17** and connecting member **31**, as in said copending patent application.

The jaw construction shown in FIGURES 1–6 is illustrated as for use in driving hexagonal nuts or boltheads, having six jaws **30**, but may be of other number and shape, if desired. For example, round, polygonal, and other-shape nuts, boltheads, and the like may also be grasped and driven by a wrench of the present invention. In the removal of a hex-head bolt, the wrench in the condition shown in FIGURE 2 is engaged on the bolthead with the latter abutting the abutment surfaces **35**. Force applied to the shank **13** effects movement of the closer **20** with its end **24** riding on the cam surfaces **36** to close the jaws **32** and retract the latter toward the closer. Upon contraction of the jaws **32**, the corners of the hex head will engage between adjacent pairs of the jaws, and the jaw faces **33** will engage respective sides of the bolthead, until the bolthead is firmly grasped by the jaws, the effective jaw surfaces being the edges thereof proximate to the hex-head corners. In this condition, rotative force applied to the shank **13** is effectively transmitted to the bolthead proximate to the corners thereof, so as to have a high moment arm. The slight taper of jaw faces **33** in the opened or expanded jaw condition facilitates entry of a nut or bolthead into position between the jaw faces, while the reduced taper or absence thereof in the closed position insures maximum applied turning force, and retention of the free nut or bolt, if desired. This jaw-face divergence facilitates release of even the smallest articles grasped by the jaws. In the nut- or bolt-turning action, the lugs **25** effectively maintain the desired jaw spacing and resist reaction torques and damage to the jaws.

As is apparent in FIGURES 4 and 5 illustrating the extreme open and closed positions of the jaws **32**, the abutment surfaces **35** extend radially inwardly sufficiently to engage a received nut, while the diametral spacing between the internal projections **34** is sufficient to rotatably accommodate a bolt projecting beyond the received nut.

As discussed hereinbefore, the angle of cam surfaces **36**, and the resilience of jaws **30**, as well as the force of a compression spring in the closer, if employed, may be selected to insure holding action of a nut, bolthead, or other article engaged by the jaws **30**; or, automatic discharge of the held article, if desired. Thus, the actuator **40** may require manual actuation, as by outward sliding thereof, to discharge a held article, unless such discharge is automatic, in which case the actuator may be manually retracted to hold the jaws in gripping engagement with a received nut or the like, as for placement in a difficult or remote location. By this construction, tools having different characteristics may be provided of the same general design. The swivel collar or sleeve **28** facilitates holding the tool in gripping engagement with an article while effecting rotation thereof, as will readily be apparent.

While the wrench construction of the present invention has been illustrated and described in association with manual-handle means, it is appreciated that other such handle means may be employed, if desired, say that of a spiral- ratchet handle, an electric-drill chuck, or other.

From the foregoing, it is seen that the present invention provides an automatically adjustable socket wrench which fully accomplishes its intended objects and is well adapted to meet practical conditions of manufacture and use.

Although the present invention has been described in some detail by way of illustration and example for purposes of clarity of understanding, it is understood that certain changes and modifications may be made within the spirit of the invention and scope of the appended claims.

What is claimed is:

1. An automatically adjustable socket wrench comprising an elongate handle shank, a hollow tubular closer extending longitudinally from one end of said handle shank and terminating in an open end, a generally cylindrical array of elongate jaws having their inner ends internally of said closer and extending outwardly therefrom away from said shank to terminate in outer ends having radially inwardly facing spaced jaw faces, connection means internally of said closer connecting together the inner jaw ends and mounted for movement longitudinally of said closer to shift the outer jaw ends between an extended position externally of said closer and a retracted position interiorly of said closer, said jaws being resiliently deflectable between a relatively unstressed radially expanded position of said outer jaw ends and a relatively stressed radially contracted position of said outer jaw ends with the jaws in adjacent side-by-side relation, cam means on the radially outer sides of said jaws slidably engageable with said closer to effect movement of said jaws to said radially contracted position upon retraction of said jaws and to release said jaws to their radially expanded position upon extension of said jaws, and a plurality of internal projections on said closer interposed between adjacent pairs of jaws to reinforce the latter against reaction torque, said jaws having their adjacent sides beveled for avoiding the overstressing of adjacent jaw and projection pairs.

2. An automatically adjustable socket wrench according to claim 1, in combination with an actuator slidable externally on said closer, and tie means connected to said actuator and jaws for manually effecting extension and retraction of said jaws upon sliding movement of said actuator on said closer.

3. An automatically adjustable socket wrench according to claim 2, said tie means comprising a transverse member extending through said closer and constrained against rotation relative to said jaws and closer to at least partially transmit reaction torque from said jaws to said handle shank.

4. An automatically adjustable wrench according to claim 3, said actuator comprising a cylindrical cover protectively surrounding said closer and jaws.

5. An automatically adjustable socket wrench according to claim 1, in combination with longitudinally outwardly facing abutment means on each of said jaws for abutment with a polygonal object to be engaged by said jaw faces, whereupon depression of said handle shank effects closure of said jaws.

6. An automatically adjustable socket wrench according to claim 5, said jaw faces being configured to diverge in the longitudinally outward direction of said jaws when said jaws are expanded, said jaw-face divergence being reduced upon jaw contraction, for effective gripping action and positive release of a gripped article.

References Cited

UNITED STATES PATENTS

636,511	11/1899	Fleming	81—112 X
1,232,735	7/1917	Torvik	81—112
2,599,026	7/1952	Strayer	81—112
2,669,896	2/1954	Clough	81—112 X
3,052,906	9/1962	Shiffman	81—114 X
3,339,439	9/1967	Van Dalen et al.	81—112

MILTON S. MEHR, *Primary Examiner.*