(No Model.) 2 Sheets—Sheet 1.

G. W. GRIMES.

WELL PUMPING POWER.

No. 590,482. Patented Sept. 21, 1897.

Fig. 1,

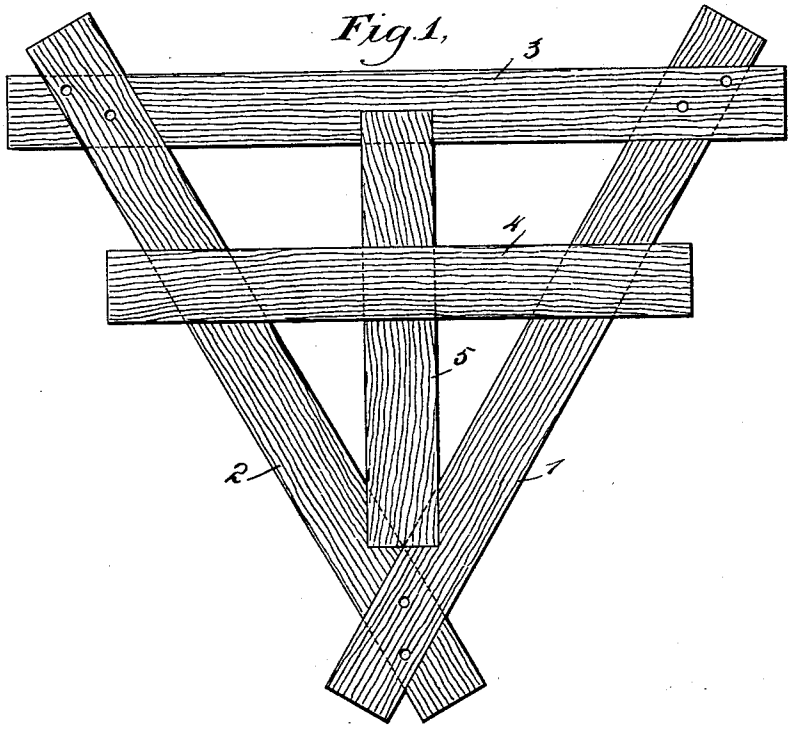

Fig. 2,

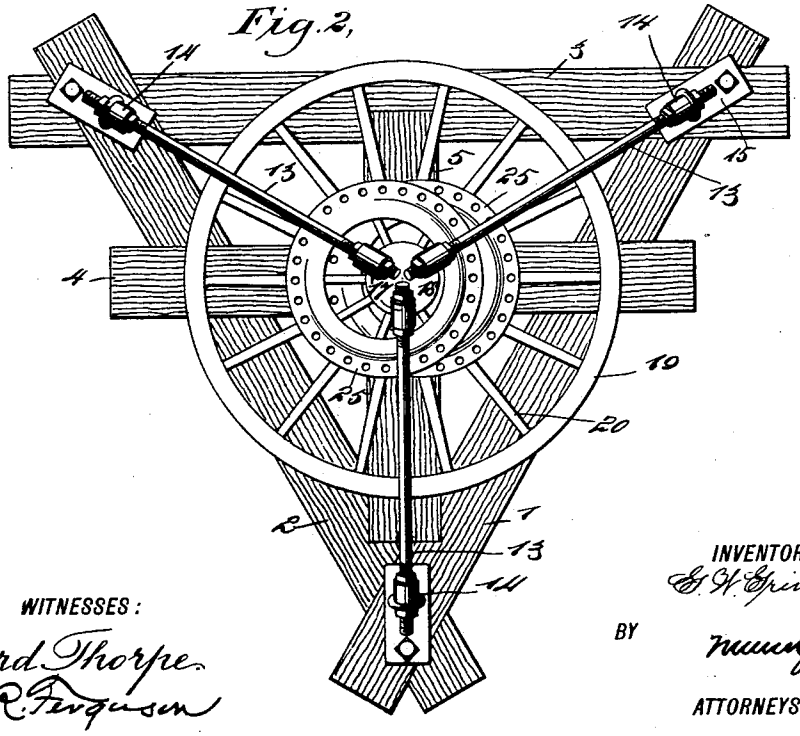

WITNESSES:

Edward Thorpe.

C. R. Ferguson

INVENTOR

G. W. Grimes.

BY

ATTORNEYS.

THE NORRIS PETERS CO., PHOTO-LITHO., WASHINGTON, D. C.

(No Model.) 2 Sheets—Sheet 2.

G. W. GRIMES.

WELL PUMPING POWER.

No. 590,482. Patented Sept. 21, 1897.

Fig. 3.

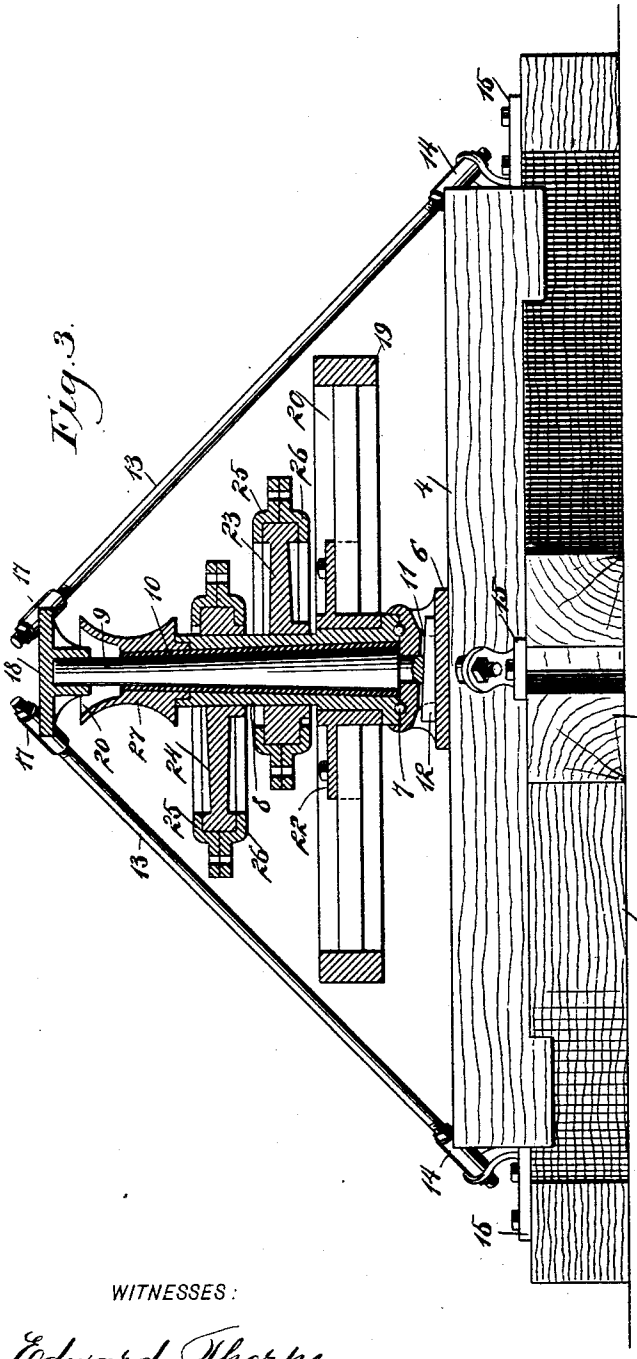

Fig. 6.

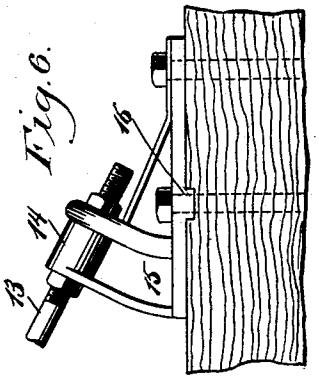

Fig. 5.

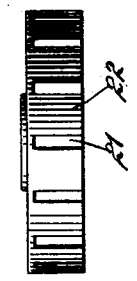

Fig. 4.

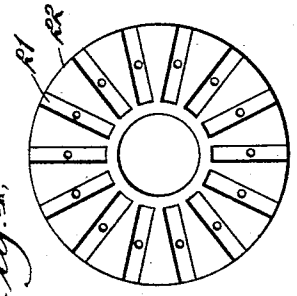

WITNESSES:

Edward Thorpe.
C. R. Ferguson

INVENTOR
G. W. Grimes.
BY
Munn & Co
ATTORNEYS.

THE NORRIS PETERS CO., PHOTO-LITHO., WASHINGTON, D. C.

UNITED STATES PATENT OFFICE.

GEORGE W. GRIMES, OF BLUFFTON, INDIANA.

WELL-PUMPING POWER.

SPECIFICATION forming part of Letters Patent No. 590,482, dated September 21, 1897.

Application filed March 1, 1897. Serial No. 625,490. (No model.)

To all whom it may concern:

Be it known that I, GEORGE W. GRIMES, of Bluffton, in the county of Wells and State of Indiana, have invented new and useful Improvements in Well-Pumping Powers, of which the following is a full, clear, and exact description.

This invention relates to powers for pumping wells, and particularly oil-wells; and the object is to provide a power in which the friction will be reduced to a minimum and with which a series of surrounding wells may be simultaneously operated or pumped.

I will describe a well-pumping power embodying my invention, and then point out the novel features in the appended claims.

Reference is to be had to the accompanying drawings, forming a part of this specification, in which similar characters of reference indicate corresponding parts in all the views.

Figure 1 is a top plan view of a base for supporting the power mechanism. Fig. 2 is a top plan view of the pumping power. Fig. 3 is a vertical section. Fig. 4 is a bottom plan view of a hub employed for the power-wheel. Fig. 5 is an edge view thereof, and Fig. 6 is a side elevation showing a holding-bracket employed.

The base comprises three sills, 1, 2, and 3, arranged in the form of a triangle, with the ends of the sills halved together. Extended across the sills 1 and 2 is a base-beam 4 having its ends secured to said sills 1 and 2, and extended from the sill 3 to the junction of the sills 1 and 2 is a supporting-beam 5. This supporting-beam 5 is arranged at right angles to the base-beam 4 and extends underneath the same, the beam 5 being provided with a mortise to receive the beam 4, whereby a very rigid structure is formed.

Mounted on the base-beam 4 is a metal base-plate 6, having a crown portion 7 provided in its top with an annular channel forming an oil-cup and also designed to receive the lower end of a sleeve 8. The upper surface of the crown portion of the base-plate within the oil-channel is provided with an annular raceway, and the lower end of the sleeve 8 is also provided with an annular raceway, and antifriction bearing-balls are placed in these raceways, as plainly indicated in Fig. 3.

Extended upward from the base-plate 6 is a post 9. This post 9 extends through the sleeve 8, and for the purpose of reducing friction between the sleeve and the post I provide the sleeve with a bushing 10 of antifriction metal. The post 9 is longitudinally tapered, the smaller diameter being near the upper end, and for the purpose of taking up any wear that there may be between the interior of the sleeve or its bushing and the post I provide means for adjusting the post vertically. As here shown, the post at its lower end has a cylindrical reduced portion extended into a socket formed in the center of the crown portion of the base-plate. The crown portion of the base-plate has a transverse opening 11 and the lower portion of the post also is provided with a transverse opening coincident with the opening 11. A wedge-shaped key 12 is extended through the opening 11 and through the opening in the lower portion of the post. Obviously by driving the wedge-shaped key inward the post may be elevated into the sleeve.

The post 9 is rigidly held from lateral movement by means of brace-rods 13. The lower ends of the rods 13 are extended through sleeves 14 on brackets 15, secured to the base-sills by means of bolts, which will also serve to secure the base-sills together. To more rigidly hold the brackets in relation to the sills, I provide the under side of the bracket with transverse ribs 16 designed to engage channels formed in the sills. The portions of the brace-rods extended through the sleeves 14 are threaded, and nuts are engaged with said thread and impinged against the opposite ends of the sleeves. The upper ends of the brace-rods extend through sockets 17 on a cap-plate 18, having a socket on its under side into which the upper end of the post 9 passes. The upper ends of the brace-rods are also threaded and nuts are engaged on these threaded portions at the opposite ends of the sockets 17. Obviously by manipulating the nuts on the rods the post 9 may be adjusted to its true vertical position with relation to the base and there held.

Mounted on the lower portion of the sleeve 8 is a power-wheel 19, designed to receive a band leading from any desired motor. This power-wheel 19 has spokes 20, the inner ends

of which are secured in radial channels 21, formed in the under portion of the metal hub 22, secured to the sleeve 8. This hub 22 rests at its central portion on an annular flange formed on the bottom of the sleeve. Above the power-wheel 19, and secured to the sleeves 8, are eccentrics 23 and 24. Mounted on the eccentrics or cranks 23 and 24 are ring-plates, each consisting of two sections 25 and 26. These sections engage, respectively, against the upper surface of the eccentrics and against the under surface of said eccentrics, and also against the periphery of the eccentrics. The ring-plates have peripheral flanges provided with perforations for the passage of bolts to secure pump-rods or lines thereto.

A winding-drum 27 is mounted on the upper portion of the post 9. At its lower side this winding-drum has an annular bead engaging in an annular recess in the upper end of the sleeve 8, and the antifriction bushing extends into a portion of the drum. The upper portion of the drum is made cup-shaped, as shown at 28. The cup is designed to contain oil, which will run down over the post 9 and also into the oil-channel in the upper surface of the base-plate. Beside forming an oil-receptacle the drum is employed for drawing the pump lines or rods when they are to be connected with or disconnected from their ring-plates.

It will be seen that the pumping power above described embodies simplicity and compactness of construction, and from its rigidity it may be used where great strength is required, such as in pumping very deep wells or a large number of shallow wells.

It will be noted that the hub 22 is made in a single piece, thus simplifying the construction and obviating the use of upper and lower plates as heretofore.

Having thus described my invention, I claim as new and desire to secure by Letters Patent—

1. In a well-pumping power, base-sills arranged in the form of a triangle, a base-beam supported thereon, a post extended upward from said base-beam, a cap-piece on the upper end of said post, brackets secured to the base-sills, sleeves on said brackets, brace-rods extended through said sleeves and also through sockets in the cap-piece, and eccentrics mounted to rotate around the post, substantially as specified.

2. A well-pumping power, comprising a base consisting of sills connected together in the form of a triangle, a base-beam mounted thereon, a base-plate on the base-beam, a post extended up from the base-plate, a cap on the upper end of the post, sockets on said cap, brackets secured to the base-sills, sleeves on said brackets, brace-rods extended through said sleeves and through the sockets and having screw-threaded portions, nuts on said screw-threaded portions, and pump-rod-actuating mechanism mounted to rotate around the post, substantially as specified.

3. A well-pumping power, comprising a base, a base-plate having an annular channel in its upper surface, a post extended upward from the base-plate, means for adjusting the post vertically with relation to the base-plate, a sleeve mounted to rotate on the post, a power-wheel attached to the sleeve, an eccentric secured to the sleeve, and ring-plates on said eccentric and with which pump-actuating rods or lines are to be engaged, substantially as specified.

4. A well-pumping power, comprising a base, a base-plate thereon, a tapered post extended upward from the base-plate, a wedge-shaped key movable through an opening in the base-plate and through an opening in the lower end of the post, whereby said post may be adjusted vertically, a sleeve mounted to rotate on the post, bearing-balls between the lower end of said sleeve and the upper portion of the base-plate, a power-wheel mounted on the sleeve, pump-rod-actuating mechanism mounted on the sleeve, and a drum mounted to rotate around the post, the said drum having a cup portion to receive oil, substantially as specified.

5. A well-pumping power, comprising a base, a base-plate thereon, having a crown portion provided with an annular channel in its upper surface and also having a transverse opening through said crown portion, a longitudinally-tapered post having a reduced lower end loosely engaging in an opening in the base-plate, the said reduced lower end also having a transverse opening, a wedge-shaped key engaging through said openings, a sleeve mounted to rotate on the post, and pump rod or line actuating mechanism connected to said sleeve, substantially as specified.

6. In a pump-actuating power, a rotary sleeve, pump-rod-actuating devices on said sleeve, and a drum also mounted on said sleeve and having an annular flange on its lower side engaging in an annular depression in the top of the sleeve, and the upper portion of said drum being formed as a cup, substantially as specified.

GEORGE W. GRIMES.

Witnesses:
JAMES W. WILDING,
WILLIAM F. LINDENBERG.