United States Patent [19]

York

[11] **3,809,096**

[45] **May 7, 1974**

[54] **PERINEAL PAD**

[76] Inventor: **Winnifred F. York,** 128 Summit Park Ave., Portland, Maine 04103

[22] Filed: **Jan. 18, 1973**

[21] Appl. No.: **324,573**

Related U.S. Application Data

[63] Continuation-in-part of Ser. No. 108,464, Jan. 21, 1971, abandoned.

[52] **U.S. Cl.** **128/403**

[51] **Int. Cl.** **A61f 7/04**

[58] **Field of Search** ..... 128/399, 402, 403, 254, 128/290 R

[56] **References Cited**

UNITED STATES PATENTS

2,438,643	3/1948	Moore	128/399 X
2,548,341	4/1951	Bricmont	128/290 R
3,175,558	3/1965	Caillouette et al.	128/403
3,364,931	1/1968	Hirsch	128/290 R
3,506,013	4/1970	Zdenek	128/402

Primary Examiner—Lawrence W. Trapp

[57] **ABSTRACT**

A sterile perineal pad is disclosed that is preferably of a disposable construction and has a thermal pack underlying that portion of its absorbent member that is to be in engagement with the urogenital region of the perineum. The absorbent member includes a thicker posterior portion and is preferably held concave in use with respect to its perineum engaging surface.

7 Claims, 11 Drawing Figures

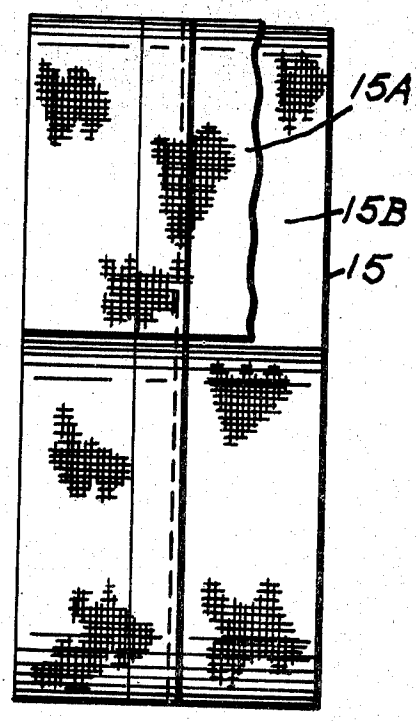

Fig. 3. Fig. 4. Fig. 5.

Fig. 1.

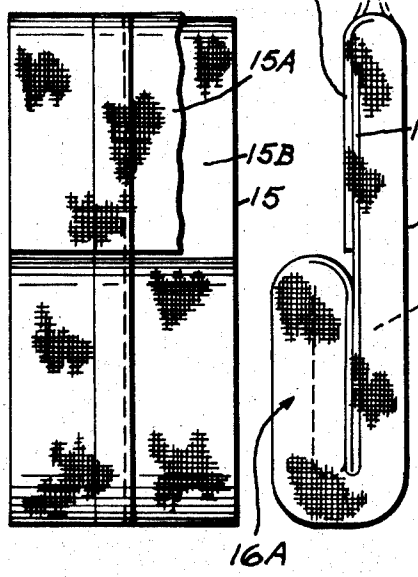

Fig. 2.

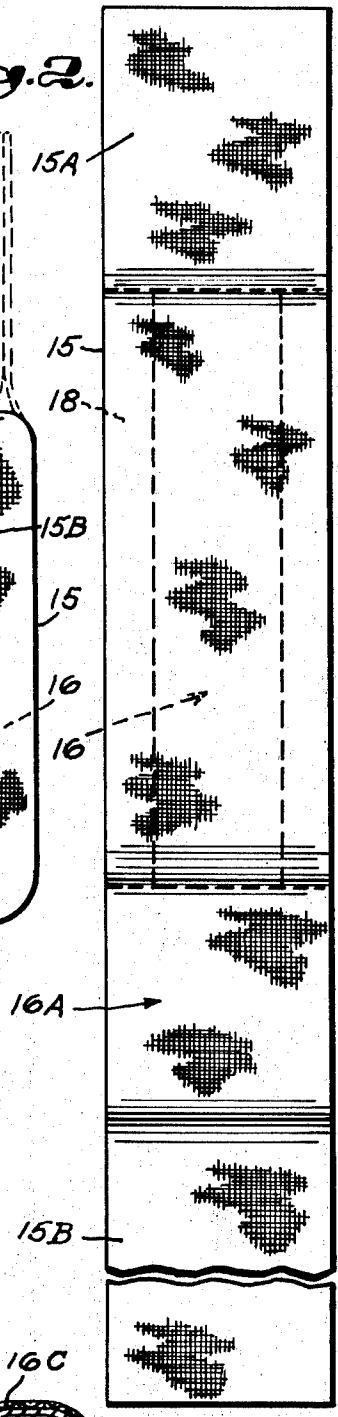

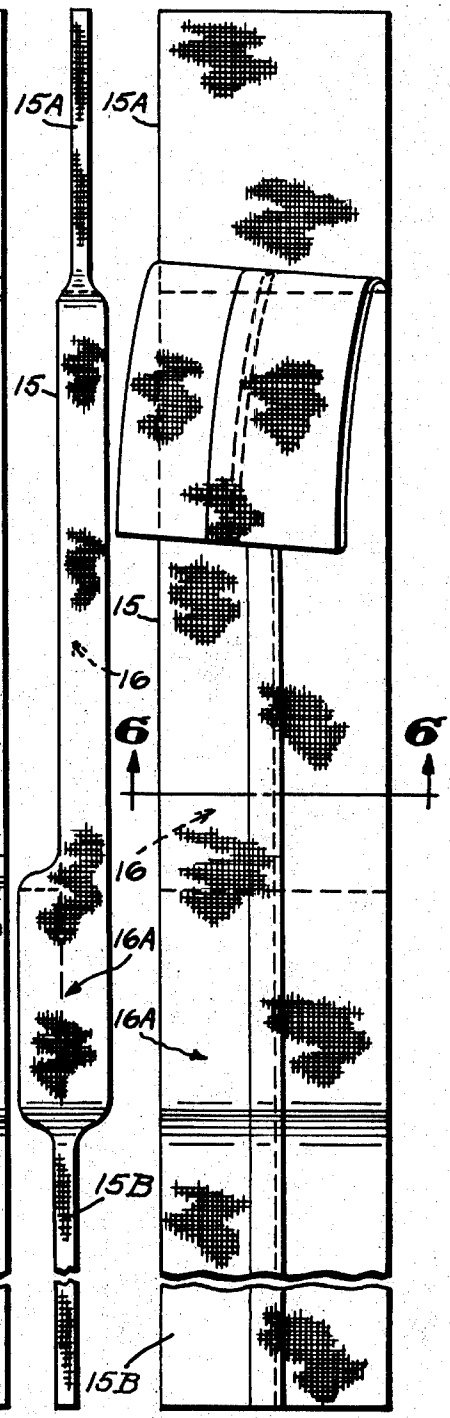

Fig. 6.

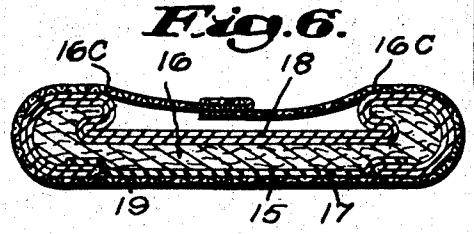

Fig. 7.

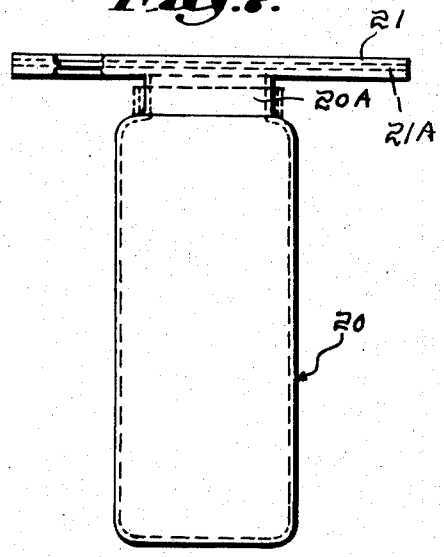

Fig. 8.

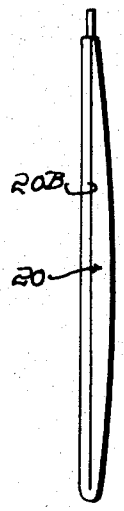

Fig. 9.

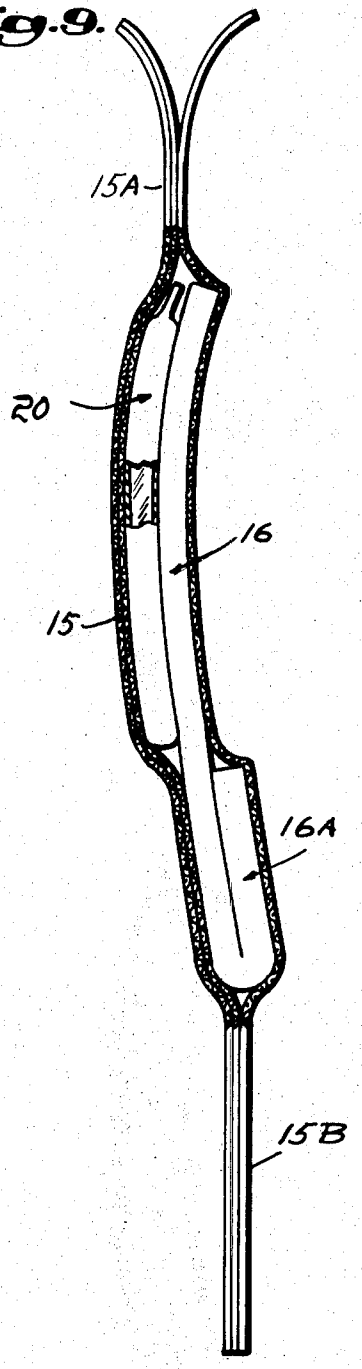

Fig. 10.

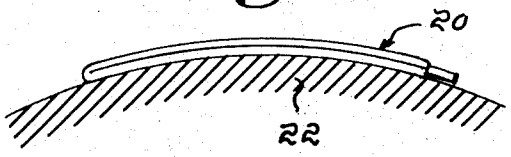

Fig. 11.

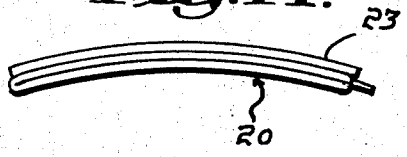

PERINEAL PAD

The present invention relates to perineal pads for post delivery use in the treatment and prevention of edemas and is a continuation-in-part of Ser. No. 108,464, filed Jan. 21, 1971, and now abandoned.

BACKGROUND OF THE INVENTION

A relatively frequent complication following the birth of a baby is an edema in the treatment of which ice packs are commonly used. Ice packs are also used to prevent an edemitous condition from arising. Ice packs, as the treatment is now practiced, are separate from the perineal pads that are then worn. As the ice packs are too expensive to be regarded as disposable and as their application entails extra work on the part of the nurses and results in a bulky arrangement that in practice prevents the patient from being ambulatory, there is a need for a perineal pad of simple, low cost construction ensuring sterility, ease of application, and patient comfort when the use of a cold pack is indicated.

THE PRESENT INVENTION

A principal objective of the present invention is, accordingly, the provision of perineal pads that meet the requirement of production and use, an objective attained with a pad for use with a separate thermal pack in providing thermal treatment of the urogential region of the perineum, the pad comprising a flexible member with an absorbent member carried thereby, and means for attaching the pack to the flexible member in a position to underlie that portion of the absorbent member that is to be in engagement with the urogential region of the perineum.

Another objective of the invention is to ensure sterility of the pad while it is being prepared for use, an objective attained by providing that the pad comprises an elongated gauze sleeve open at one end and a sterile absorbent member within the central portion of the sleeve, one surface of the central portion to be disposed in engagement with the urogential region of the perineum. The ends of the sleeve are of a length providing forward and rearward attaching portions by which the pad may be attached to a patient with said one surface thus positioned. The forward attaching portion is the open end of the sleeve. The pad, prior to use, is folded transversely upon itself with respect to said one surface with a fold line between the ends of the absorbent member but spaced from the forward end thereof to define, at least when the pad is thus folded, the bottom of a pocket between the sleeve and the other surface of the absorbent member accessible through the open end of the sleeve. The free end of the rearward attaching portion is folded over said one surface and is dimensioned so that its free end extends to the forward end of the absorbent member thus enabling the folded pad to be handled without said one surface losing its sterility while a thermal pack is being entered into the pocket through the forward attaching portion.

Another objective of the invention is to provide a pad in which the forward attaching portion is divided along its side to provide separable flaps, one foldable against the free end of the rearward attaching portion and the other foldable against said other pad surface while the thermal pack is being inserted.

A further objective of the invention is to provide a perineal pad which, when the pack is attached thereto for use maintains the absorbent member concave, lengthwise considered, with respect to its surface that is to be in engagement with the urogenital region, an objective attained by providing, in the case of a non-frozen pack, a concave backing therefor and in the case of a frozen pack, providing the frozen pack with a concave surface.

Another objective of the invention is to provide a perineal pad in which the absorbent member includes a portion extending rearwardly of that part that is to engage the urogenital region and there being of increased thickness.

Yet another objective of the invention is to provide a perineal pad in which the absorbent member includes marginal portions to overlie the sides of the thermal pack.

BRIEF DESCRIPTION OF THE DRAWINGS

In the accompanying drawings embodiments of the invention are shown in which:

FIG. **1** is a plan view of the folded pad with the sterility of the absorbent member protected;

FIG. **2** is a side view of the folded pad;

FIG. **3** is a plan view of the pad unfolded to expose its absorbent member;

FIG. **4** is a side view thereof;

FIG. **5** is a plan view of the opposite or outer face of the unfolded pad;

FIG. **6** is a section, on an increase in scale, taken approximately along the indicated lines **6—6** of FIG. **3**;

FIG. **7** is a plan view of an ice bag;

FIG. **8** is a side view thereof;

FIG. **9** is a longitudinal section through the unfolded pad with the ice pack of FIG. **10** inserted in the pack;

FIG. **10** is a partly sectioned side view of the ice bag filled and its mouth sealed and being frozen on a form to provide it with a concave face; and

FIG. **11** is a view of another embodiment of the invention with a non-frozen pack held in the desired position by an arcuate backer.

THE PREFERRED EMBODIMENT OF THE INVENTION

The perineal pad illustrated by the drawings comprises an elongated flexible member **15**, preferably a gauze sheet, with its margins folded to overlap centrally of the outer surface of the pad and secured together in a suitable manner, preferably by an adhesive to provide a sleeve. An absorbent member generally indicated at **16** is encased in the flexible sleeve member **15** between the ends thereof so that said ends provide forward and rearward attaching portions indicated, respectively, at **15A** and **15B** by which the pad may be detachably secured to a belt. The absorbent member **16** is shown, see FIG. **6** as comprising a bat-like fibre body **17**, an outer layer **18** that is preferably moisture resistant and that has its margins overlapping and adhesively secured to the margins of an absorbent layer **19** on the surface of the body **17** that is to engage the urogenital region of the perineum and hereinafter referred to as the inner surface of the pad.

In accordance with the invention, the absorbent member **16** includes a posterior portion **16A** of increased thickness, conveniently a doubled-over end.

The forward attaching portion **15A** of the flexible sleeve member is divided into inner and outer flaps, see FIGS. **5** and **9**, to enable a thermal pack generally indicated at **20**, to be inserted between the absorbent member **16** and the outer face of the flexible sleeve member **15**. The thermal pack **20** is discussed herein as an ice pack.

The pad is shown in FIGS. **1** and **2** folded transversely at the junction of the absorbent member **16** and its thicker portion **16A** enabling the attaching portion **15B** to overlie the otherwise exposed inner surface of the absorbent member. The attaching portion **15A** is folded over the attaching portion **15B**. In practice, the thus folded pad would be within a protective envelope until its use was wanted. The pad, when removed from its envelope may be readied for use without loss of sterility of the inner face thereof by holding it in its unfolded state with the attaching portion **15B** overlying said inner face. The outer flap of the attaching portion **15A** is then folded downwardly against the other face of the pad facilitating the entry of the pack **20** between the flaps of the forward attaching portion **15A** and into the pocket defined by the outer face of the absorbent member **16**, the outer face of the sleeve member **15** and the fold line established by the folded over portion **16A** of the absorbent member. With the pack **20** in place, the pad is then unfolded and its end portion attached to the belt.

It will be noted that the absorbent member **16** is shown with its margins **16C** folded to define pocket sides receiving between them the sides or edges of the pack **20**. This construction is preferred when the presence of an ice pack would otherwise be uncomfortably cold to the patient.

The pack is shown as a bag having a neck **20A** with lengthwise folds **20B** extending lengthwise of its sides enabling the bag to expand as it is filled. After the bag is filled, the neck **20A** is then folded over and securely closed by means of a wrap-around **21** of the type including a bendable non-resilient wire **21A** secured to one face of the neck **20A** near its mouth enabling the folded over portion to be quickly and easily secured. The bag is formed of thin waterproof plastic stock to be so inexpensive that it may be discarded after a single use.

In use, the packs may be filled with crushed ice or they may be water filled and then frozen. It is preferred, however, that the inner surface of the absorbent member **16** be concave. It is preferred that the bags are filled with water and then placed on a convex form **22**, see FIG. **10**, in a freezer, not shown, thus to provide the frozen bags with the desired concave form. When the contents of the bags are not frozen as when they are filled with crushed ice, an appropriately shaped backer **23** is inserted between the pack and the outer surface of the flexible sleeve member **15**, see FIG. **11**.

I claim:

1. A perineal pad for use with an insert in providing a thermal factor in the treatment of the urogenital region of the perineum, said pad comprising an elongated gauze sleeve open at one end and a sterile absorbent member within the central portion of the sleeve, one surface of said central portion to be disposed in engagement with said region, the ends of said sleeve being of a length to provide forward and rearward portions by which the pad may be attached to a patient with said one surface thus positioned, the forward attaching portion including the open end of the sleeve, the pad being folded transversely upon itself with respect to said one surface with the fold line between the ends of the absorbent member but spaced from the forward end thereof to define, at least when the pad is thus folded, the bottom of a pocket between the sleeve and the other surface of the absorbent member accessible through the open end of the sleeve, the free end of the rearward attaching portion being folded over said one surface and dimensioned so that its free end extends to the forward end of the absorbent member thus enabling the folded pad to be handled without said one surface losing its sterility while a thermal pack is being entered into the pocket through the forward attaching portion.

2. The perineal pad of claim **1** in which the forward attaching portion is divided along its sides to provide separable flaps.

3. The perineal pad of claim **1** in which the pad rearwardly of the fold line is thicker than the remainder thereof.

4. The perineal pad of claim **1** in which the margins of the absorbent member are inturned to provide pocket side walls.

5. The perineal pad of claim **1** and a thermal insert for said pocket that is longitudinally concave and maintains the pad concave with respect to said one surface.

6. The perineal pad of claim **1** in which the insert comprises a flexible thermal pack and a concave backer therefor.

7. The perineal pad of claim **1** in which the insert is an ice bag frozen in a concave form.

* * * * *