United States Patent [19]

Long et al.

[11] **Patent Number: Des. 280,041**

[45] **Date of Patent: ** Aug. 13, 1985**

[54] **DISKETTE STORAGE CONTAINER**

[75] Inventors: **Jerry M. Long**, Scotts Valley; **James A. Womack**, Los Gatos, both of Calif.

[73] Assignee: **Innovative Concepts, Inc.**, San Jose, Calif.

[**] Term: **14 Years**

[21] Appl. No.: **444,982**

[22] Filed: **Jan. 24, 1983**

[52] **U.S. Cl.** **D3/35**; D3/78; D19/76

[58] **Field of Search** 206/45.19, 45.23, 387, 206/425, 444, 44.13, 45.13, 45.15, 45.18, 387; D3/30.1, 33, 35, 78; D19/75, 76, 86, 90

[56] **References Cited**

U.S. PATENT DOCUMENTS

2,675,911	4/1954	Thurston	206/45.13
2,775,342	12/1956	Smith	206/45.13
3,086,645	4/1963	Yount	206/45.13
3,253,871	5/1966	Karper	D19/76
4,356,918	11/1982	Kahle et al.	206/444

Primary Examiner—George P. Word
Attorney, Agent, or Firm—Claude A. S. Hamrick

[57] **CLAIM**

The ornamental design for a diskette storage container, substantially as shown and described.

DESCRIPTION

FIG. **1** is a perspective view of a diskette storage container showing my new design in its closed configuration;

FIG. **2** is a perspective view thereof showing the container in its opened configuration;

FIG. **3** is a perspective view showing the base member thereof, the side portions not shown being plain or a mirror image of the side portions shown;

FIG. **4** is a perspective view showing the closure member in a raised disposition; and

FIG. **5** is a partially broken perspective view showing the fold-out diskette support member thereof, the opposite side portions not shown being plain or a mirror image of the side portions shown.

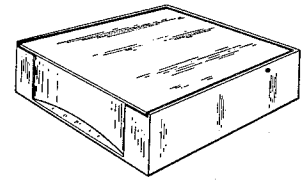

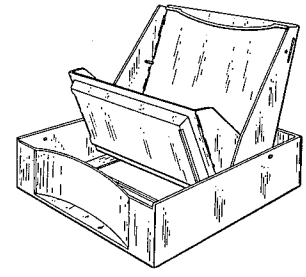

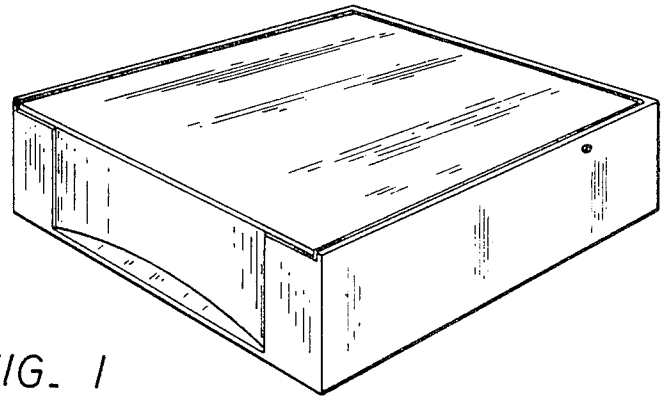

FIG. 1

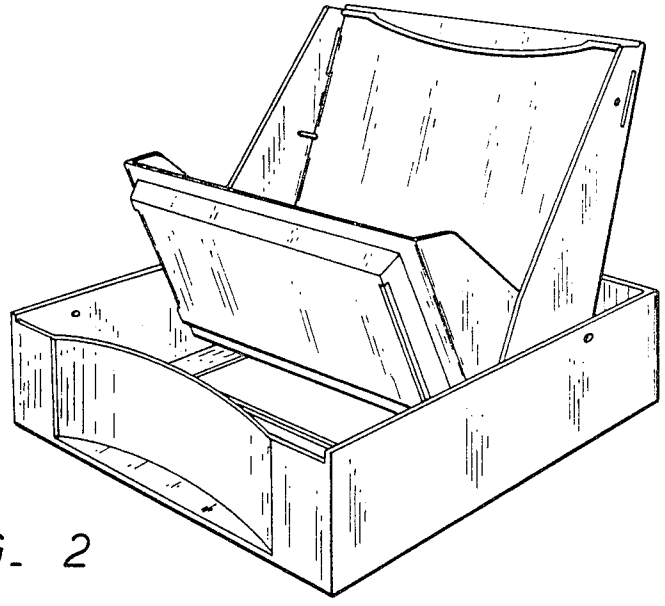

FIG. 2

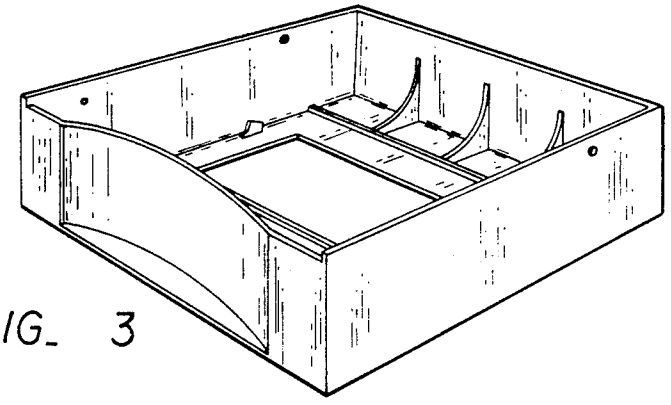

FIG. 3

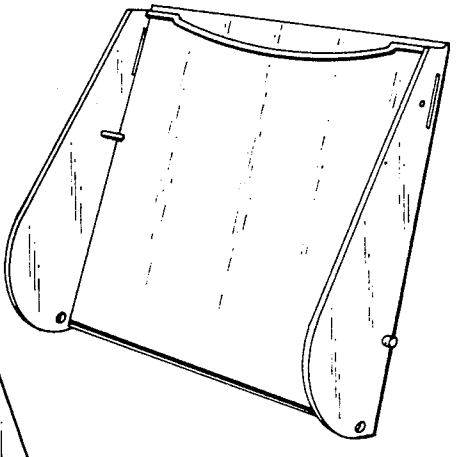

FIG. 4

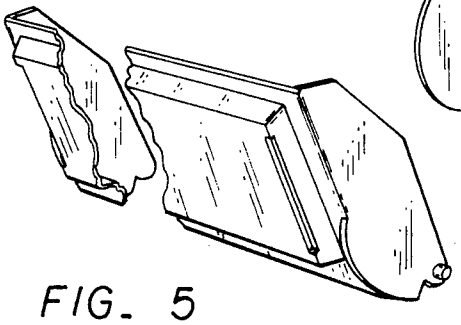

FIG. 5