B. M. FOX.

KNOCKDOWN TABLE.

APPLICATION FILED DEC. 3, 1915.

1,225,234. Patented May 8, 1917.

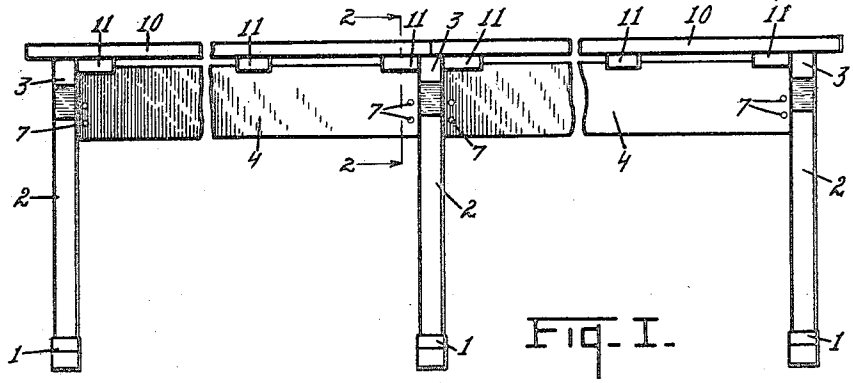

FIG. I.

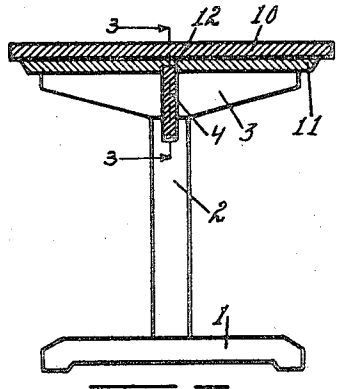

FIG. II.

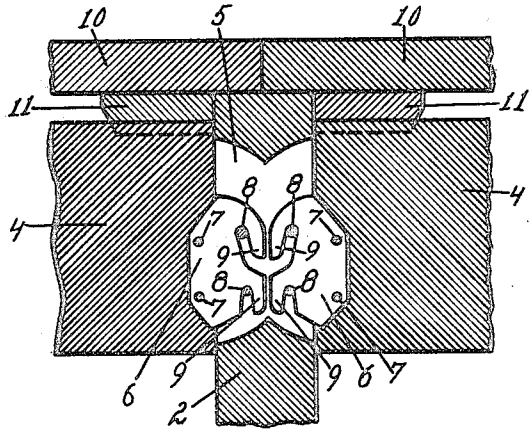

FIG. III.

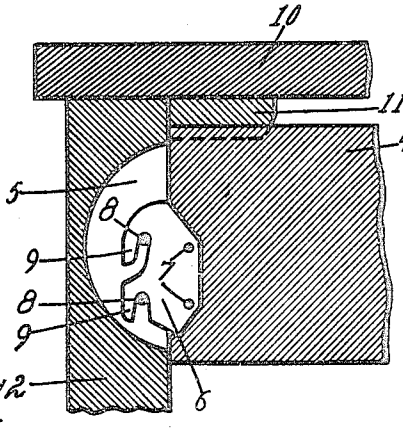

FIG. IV.

WITNESSES:

H. Bears

E. C. Blake.

INVENTOR.

BERT M. FOX.

BY Chappell & Earl

ATTORNEYS.

THE NORRIS PETERS CO., PHOTO-LITHO., WASHINGTON, D. C.

# UNITED STATES PATENT OFFICE.

BERT M. FOX, OF GRAND RAPIDS, MICHIGAN, ASSIGNOR TO GRAND RAPIDS HAND SCREW CO., OF GRAND RAPIDS, MICHIGAN.

## KNOCKDOWN TABLE.

1,225,234. Specification of Letters Patent. Patented May 8, 1917.

Application filed December 3, 1915. Serial No. 64,847.

*To all whom it may concern:*

Be it known that I, BERT M. Fox, a citizen of the United States, residing at Grand Rapids, Michigan, have invented certain new and useful Improvements in Knockdown Tables, of which the following is a specification.

This invention relates to improvements in knock-down tables. My improvements are especially desirable for embodiment in long tables such as banquet tables, sample tables, display tables and the like.

The main objects of my improvements are:

First, to provide an improved knock-down table made up of units adapted to be used separately or joined to produce tables of desired length which are strong and rigid when assembled and which when knocked down may be very compactly stored.

Second, to provide an improved knock-down table which is easily assembled or knocked down and one in which the parts are simple and economical to produce.

Further objects, and objects relating to details and economies of construction and operation will definitely appear from the detailed description to follow.

I accomplish the objects of my invention by the devices and means described in the following specification. The invention is clearly defined and pointed out in the claims.

A structure constituting a preferred embodiment of my invention is illustrated in the accompanying drawing forming a part of this specification, in which:

Figure I is a detail side view of a table embodying the features of my invention.

Fig. II is a vertical transverse section on a line corresponding to line 2—2 of Fig. I.

Fig. III is an enlarged detail vertical longitudinal section on a line corresponding to line 3—3 of Fig. II.

Fig. IV is a similar detail section through one of the outer pedestals.

In the drawing similar reference characters refer to similar parts throughout the several views, and the sectional views are taken looking in the direction of the little arrows at the ends of the section lines.

Referring to the drawing, I provide a plurality of pedestals consisting of horizontal base portions 1, uprights 2 mounted centrally thereon and top cross pieces or top bed pieces 3 mounted upon the uprights. These parts are permanently connected.

The pedestals are connected when the table is erected by means of the longitudinal rails 4 which extend between the pedestals, the rails being disposed centrally of the pedestals and on edge with their ends abutting the sides of adjacent pedestals. The pedestals are slotted at 5 opposite the ends of the rails to receive the fastening plates 6. The fastening plates 6 are set into the ends of the rails to project therefrom into the slots. The fastening plates 6 are secured to the rails by the bolts or rivets 7.

The pedestals are provided with pin-like keepers 8 disposed transversely of the slots while the fastener plates have downwardly facing hooks 9 adapted to coact with these keepers 8, the hooks being forwardly inclined so that the ends of the rails are drawn against the sides of the pedestals as the hooks are forced into position. The intermediate pedestals are supplied with opposed slots and keepers to receive rail at each side. See Fig. III.

The table top sections 10 are arranged on the pedestal top pieces with the ends of adjacent sections abutting over the intermediate pedestals, as shown in Figs. I and III. The top sections have cross cleats 11 on their under sides, the end cross cleats being disposed so as to fit between the pedestals and support the top sections against longitudinal movement thereon. The cross cleats are notched at 12 to engage the longitudinal rails thereby supporting the top sections against transverse movement.

With the parts thus arranged, the table may be made of any length desired. I find it very practical to make in the 10 foot lengths and as many units may be joined as desired. The table when set up or assembled is rigid and strong. Further by forming and connecting the pedestals as described there are no obstructions to inconvenience persons sitting at the table. The parts are simple and economical to produce and may be very compactly arranged for transportation or storage.

Having thus described my invention, what I claim as new and desire to secure by Letters Patent is:

1. In a knock-down table, the combination of a plurality of pedestals, each comprising

a base portion, an upright mounted centrally thereon, and a top piece on the upright, longitudinal rails disposed on edge centrally of and with their ends abutting the sides of adjacent pedestals, said pedestals being slotted opposite the ends of the rails and provided with pin-like keepers disposed transversely of the slots, plate-like fasteners set into the ends of said rails to project therefrom into said slots in said pedestals and provided with downwardly facing hooks coacting with the keepers therein, the hooks being forwardly inclined so that the ends of the rails are drawn against the sides of the pedestals as the hooks are forced into position, the intermediate pedestals being provided with opposed slots and keepers to receive a rail at each side, and table top sections arranged on said pedestal top pieces with the ends of adjacent sections abutting above the intermediate pedestals, said top sections having cross cleats on their under sides to engage said rails to support the top sections against transverse movement and disposed so that the end cleats engage the pedestals to support the top sections against longitudinal movement, the parts below said rails and between said pedestals being unobstructed.

2. In a knock-down table, the combination of a plurality of pedestals, each comprising a base portion, an upright mounted centrally thereon, and a top piece on the upright, longitudinal rails disposed on edge centrally of and with their ends abutting the sides of adjacent pedestals, fasteners on the ends of said rails provided with hooks, said pedestals being provided with coacting keepers, the intermediate pedestals being provided with opposed keepers to receive a rail at each side, and table top sections arranged on said pedestal top pieces with the ends of adjacent sections abutting above the intermediate pedestals, said top sections having cross cleats on their under sides engaging said rails to support the top sections against transverse movement and said pedestals to support said top sections against longitudinal movement, the space below said rails and between said pedestals being unobstructed.

3. In a knock-down table, the combination of pedestals, each comprising a base portion, an upright thereon, and a top piece on the upright, a longitudinal rail disposed on edge centrally of and with its ends abutting the sides of the pedestals, said pedestals being slotted opposite the ends of the rail and provided with pin-like keepers disposed transversely of the slots, plate-like fasteners set into the ends of said rail to project therefrom into said slots in said pedestals and provided with downwardly facing hooks coacting with the keepers therein, the hooks being forwardly inclined so that the ends of the rail is drawn against the sides of the pedestals as the hooks are forced into position, and a table top arranged on said pedestal top pieces and having cross cleats on its under side notched to engage the rail to support the top section against transverse movement and disposed so that the end cleats engage the pedestals to support the top sections against longitudinal movement, the space below said rails and between said pedestals being unobstructed.

4. In a knock-down table, the combination of pedestals, each comprising a horizontal base portion, an upright mounted centrally thereon, and a top cross piece on the upright, a longitudinal rail extending between the pedestals, said rail being disposed centrally and on edge with its ends abutting the sides of the pedestals, fasteners on the ends of said rail provided with hooks, said pedestals being provided with coacting keepers, and a table top arranged on said pedestal top pieces and having cross cleats on its under side engaging the rail to support the top against transverse movement and said pedestals to support said top sections against longitudinal movement, the spaces below said rails and between said pedestals being unobstructed.

In witness whereof, I have hereunto set my hand and seal in the presence of two witnesses.

BERT M. FOX. [L. S.]

Witnesses:
WM. P. PUTNAM,
L. A. CORCORAN.

**Copies of this patent may be obtained for five cents each, by addressing the "Commissioner of Patents Washington, D. C."**