United States Patent [19]

Moore

[11] **3,796,373**

[45] **Mar. 12, 1974**

[54] **SWIMMING POOL CLEANING DEVICE**

[75] Inventor: **Werton B. Moore,** Dallas, Tex.

[73] Assignees: **Marty Ross; Danny Henderson,** both of Las Vegas, Nev.

[22] Filed: **Mar. 14, 1972**

[21] Appl. No.: **234,687**

Related U.S. Application Data

[62] Division of Ser. No. 199,644, Nov. 17, 1971, Pat. No. 3,665,942.

[52] **U.S. Cl.** **239/229**

[51] **Int. Cl.** **B05b 3/00**

[58] **Field of Search** 239/229, 16, 17, 252; 114/162

[56] **References Cited**

UNITED STATES PATENTS

3,150,631	9/1964	Tillman	114/162 X
3,528,382	9/1970	Clark et al.	114/162
3,089,651	5/1963	Skerritt	239/252 X
3,315,692	4/1967	Arneson	239/229 X
3,168,896	2/1965	Berg	239/229 X
3,289,216	12/1966	Anthony et al.	239/229 X
3,079,727	3/1963	Melin	239/229

Primary Examiner—Lloyd L. King

Attorney, Agent, or Firm—Bacon & Thomas

[57] **ABSTRACT**

A swimming pool cleaning device having a floating head which is placed upon a pool surface and adapted to be supplied with water from a floating flexible hose, the floating head having cleaner hose attachments and an impeller all receiving a portion of the water supplied to the head, the impeller and a rudder being carried by a hollow swivel through which water is supplied to the impeller and being so constructed and arranged as to propel and guide the head around the pool in a random manner.

1 Claim, 5 Drawing Figures

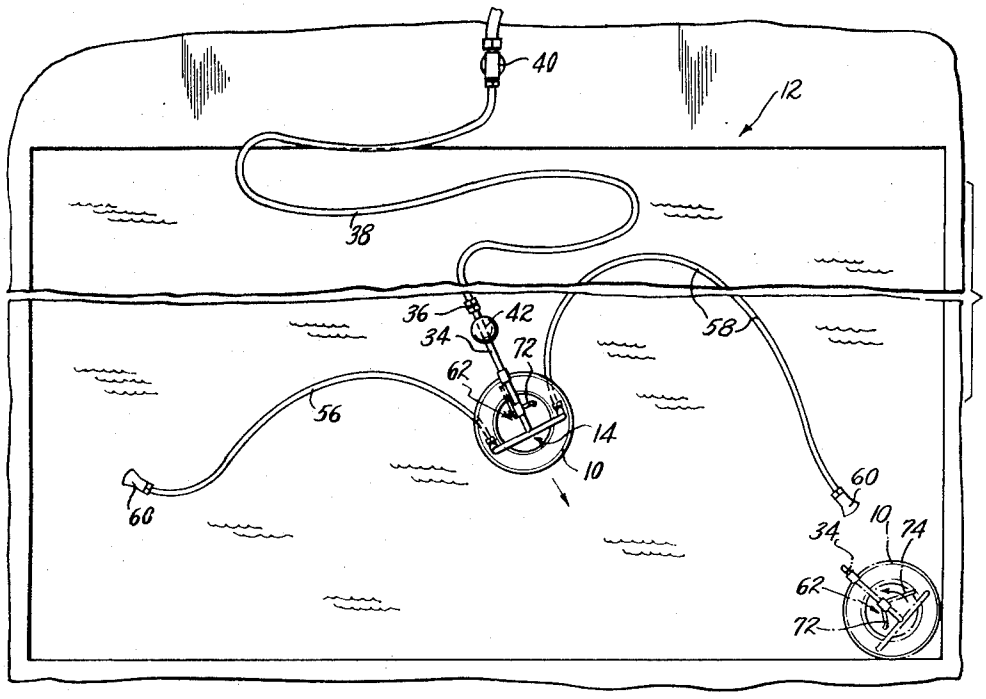

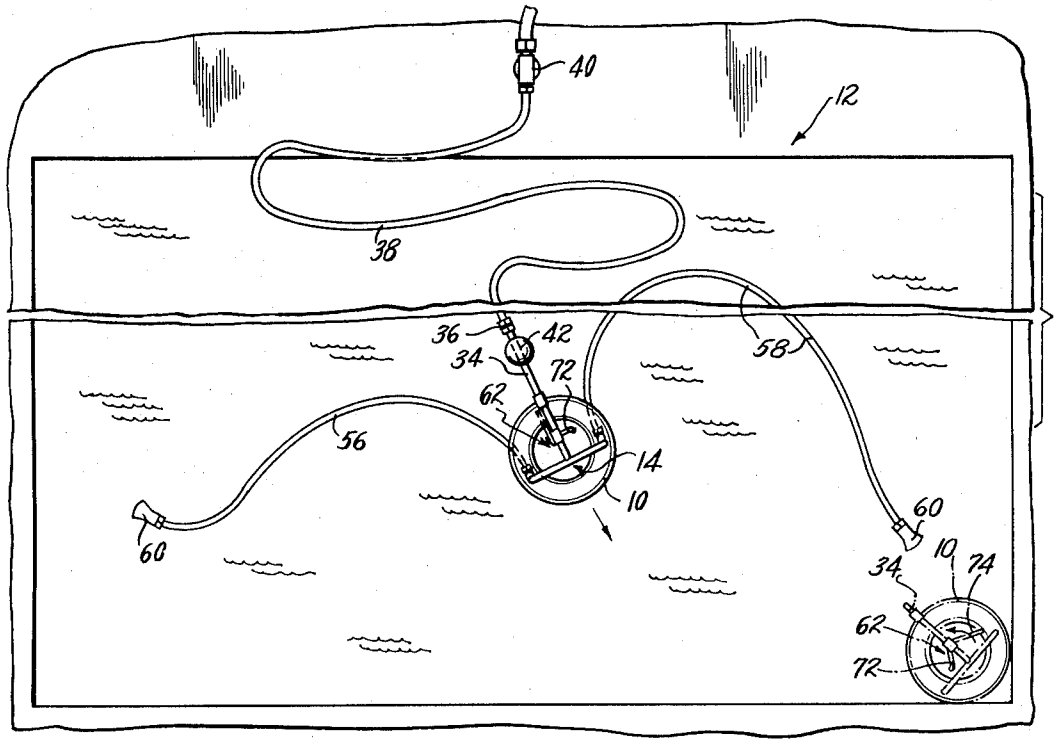
40
12
38
36
42
34
72
62
58
56
14
10
60
60
10
34
74
62
72

Fig. 1.

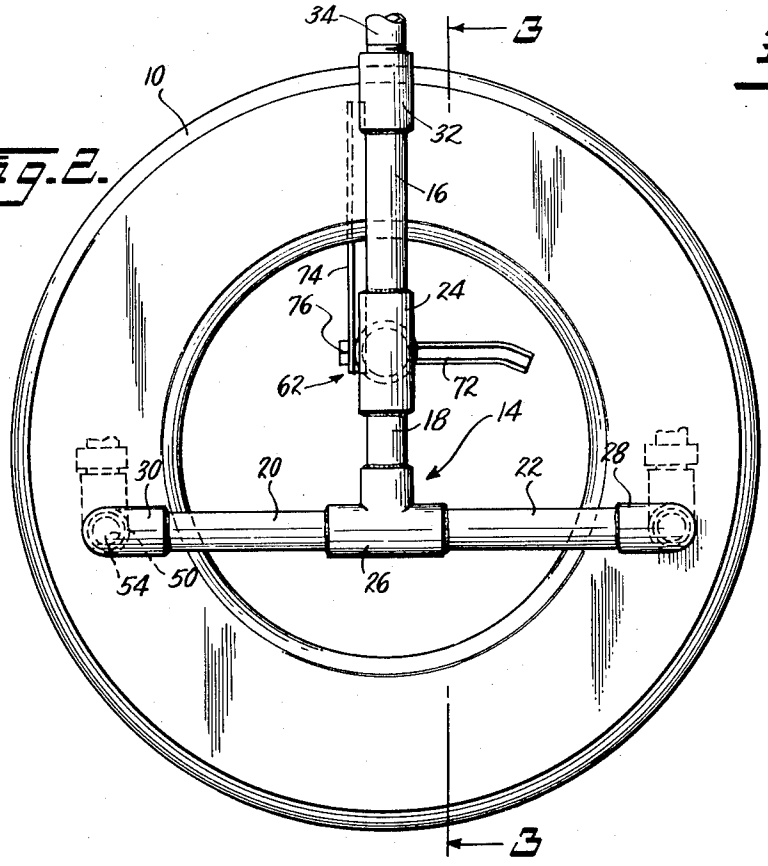
34
3
10
32
16
74
76
24
62
72
18
14
30
20
22
28
54
50
26
3

Fig. 2.

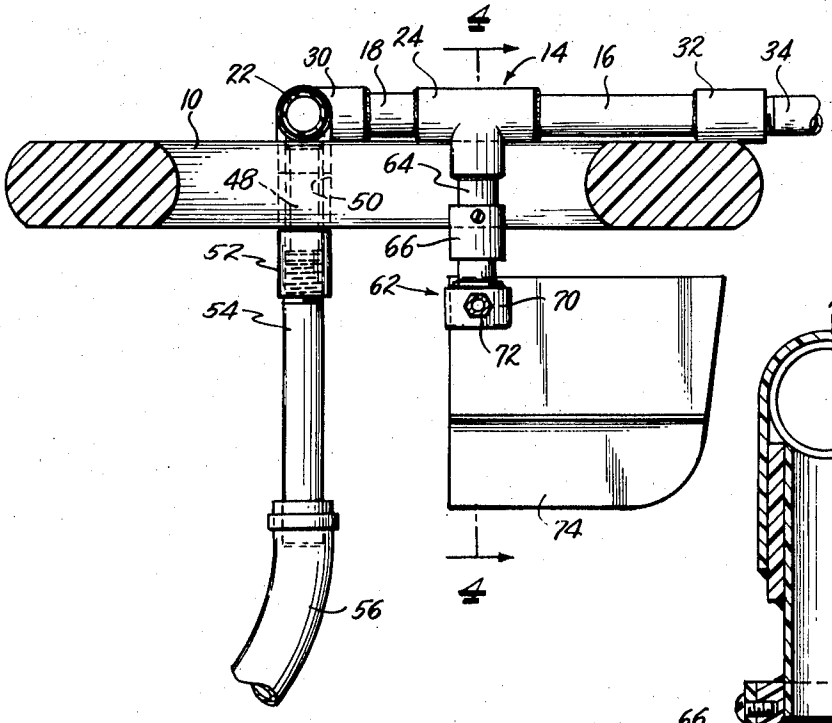

Fig. 3.

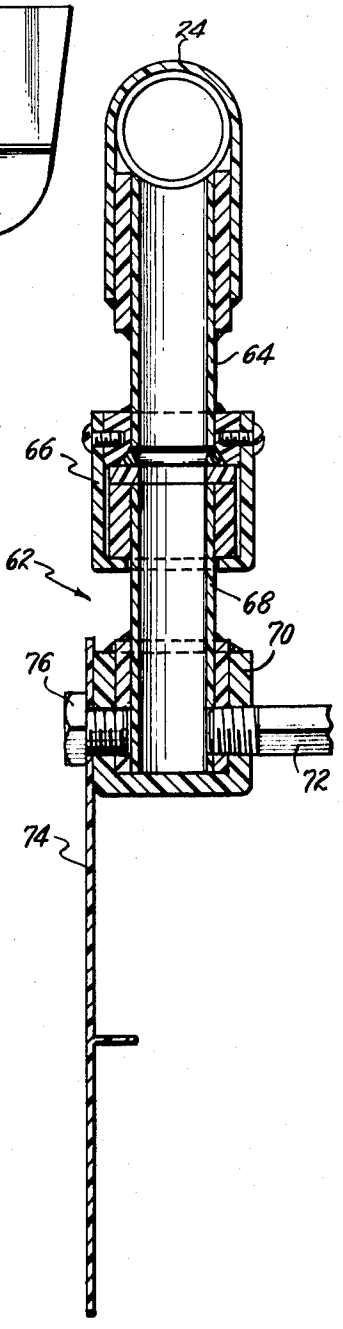

Fig. 4.

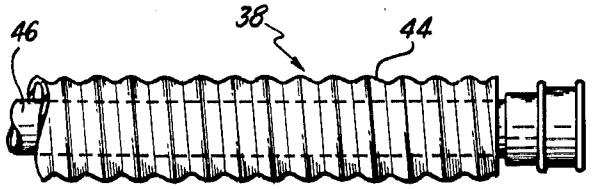

Fig. 5.

SWIMMING POOL CLEANING DEVICE

This is a division, of application Ser. No. 199,644, filed Nov. 17, 1971 , now U.S. Pat. No. 3,665,942.

BACKGROUND OF THE INVENTION

This invention relates to an improved swimming pool cleaning device which is simple in construction and which will automatically move around the entire pool area without entrapment against pool edges or in corners.

Virtually all modern swimming pools, whether private ones at homes, motels or apartments or large municipal pools are built with a filtering and cleaning system installed as standard equipment. In this system, pool water is drawn into a pump from outlets on the surface and usually from a bottom drain. The pump forces the water through a filter, from whence it is returned to the pool.

For practical reasons of engineering and economy, it is not practical for this system to keep the entire pool contents stirred up sufficiently to prevent the settling of the larger dirt and dust particles, leaves, etc. Therefore, it is necessary to clean the pool periodically to remove the debris which the filtering system does not remove. This is usually done by vacuuming the bottom and sides with a vacuum head on a pipe which is manually moved over the bottom. Its suction is water going directly to the pool pump in the filtering system. For a normal home pool, the operation requires 2 to 4 hours, and is normally performed once a week.

Observation of any outdoor pool will show that weekly cleaning is insufficient to keep the pool clean all the time. Dirt settles enough in one day to be visible in most locations. But due to the onerous and time-consuming task of vacuuming, very few pools are cleaned more often than weekly, if that often.

Therefore, a need exists and has existed for an automatic pool cleaning device which will obviate the necessity of manual vacuuming the pool.

Many attempts have been made to construct such a device with varying degrees of success over the last 20 years and more. Almost all of these devices have depended on the stirring-up action of water ejected from flexible tubes or hoses long enough to reach the pool bottom. The recurring problem is not how to stir up the dirt so that the filter can remove it. The problem is transporting the stirring tubes around the pool so as to cover its entire area. Most attempts have utilized floating heads with the tubes attached to the head. Units have been made with the head attached to complicated machinery on the side of the pool which is geared or programmed to extend in and out, move from side to side, or both in order to cover all the area. The most prevalent type of device utilizes a floating head with one or more fixed position nozzles around its perimeter to drive it across the water surface by the force of the water ejected from said nozzle(s). One of these contains a complicated gear train and internal valve set-up driven by a water turbine so that water is ejected from two or more nozzles in rotation. Thus, if the head becomes trapped in a corner, eventually the nozzle which drove it there will be stopped, and another nozzle will start ejecting water — hopefully in a direction which will result in the head moving out of the corner to resume travel around the pool surface. Another device gives up on solving the programmed floating head problem, and consists of a head with four flexible tubes attached which sinks to the bottom of the pool and stays there until removed, with its attached tubes snaking around stirring up the debris. The head does not move at all, resulting in spotty and inadequate coverage for cleaning.

All of the devices described and all which have previously been manufactured have demonstrated inadequacies which result in poor and spotty pool cleaning. Furthermore, the best known of these machines is quite expensive and is overcomplicated and unreliable.

SUMMARY OF THE INVENTION

It is an object of this invention to provide a simple, inexpensive and reliable pool cleaner which will cover the entire pool area automatically.

The swimming pool cleaning device of this invention, in a representative embodiment, comprises a floating head which is placed on the pool surface, which is supplied with water pressure via a floating flexible hose, and beneath which are several attachments, each receiving a portion of the available water pressure supply. The attachments are: at least one flexible hose equipped with a nozzle at its bottom end; and a swivel impeller and rudder assembly so constructed that it propels and guides the head around the pool in a random manner.

The actual cleaning of the pool sides and bottom is accomplished by the scouring action of the water ejected from the nozzles at the bottom ends of the dangling flexible tubes as the head moves around the pool. The scouring action stirs up the dirt and debris, which becomes temporarily suspended in the water long enough to be removed by the pool's normal filtering system.

The time for complete pool cleaning varies with the amount and types of soil to be removed, the capacity of the filtering system and the available water pressure and volume which can be used to operate the cleaner. In normal circumstances, this time will average between 4 and 10 hours.

BRIEF DESCRIPTION OF THE DRAWINGS

FIG. 1 is a top plan view of a pool showing the pool cleaning device of the invention in solid lines in one position in the pool and in broken lines in another position.

FIG. 2 is an enlarged top view of the floating head of the pool cleaning device.

FIG. 3 is a sectional view taken on the lines 3—3 of FIG. 2.

FIG. 4 is an enlarged sectional view taken on the lines 4—4 of FIG. 3.

FIG. 5 is a fragmentary view showing a floating supply hose assembly.

DESCRIPTION OF PREFERRED EMBODIMENT

Referring now to FIG. 1, the pool cleaning device comprises floating head **10** which is adapted to move about the surface of pool **12**. The head **10** is conveniently constructed of foam plastic, but can be made of any material which will float and can take any of the variety of shapes and sizes. In the embodiment shown it is shaped like a life buoy but could be of solid, oval, rectangular or other shape.

Mounted on the head **10** is a water distributing assembly **14** comprising pipes **16, 18, 20** and **22**, tees **24** and **26** elbows **28** and **30** and union **32**. The union **32**

is connected to a short piece of pipe **34** which extends from the head **10** and terminates in coupling **36** to which flexible supply line **38** is attached. The supply line **38** is in turn attached at its other end to a source of water under pressure **40,** which may be an outlet from the pool filter system. The pipes and fittings mounted on the floating head **10** are conveniently made from rigid plastic to save weight and avoid corrosion problems. A float **42** is attached to connecting pipe **34** to add buoyancy to the system.

Preferably the supply line **38** is one which will float. This can be accomplished by several means including the attachment of floats at intervals. A preferred embodiment is shown in FIG. **5** wherein an outer floatable hose **44** of foamed plastic material such as a floating pool vacuum hose encompasses a flexible inner hose **46** which carries the water under pressure. Vacuum hose of 1½ inch diameter in combination with three-fourth inch vinyl tubing is suitable for this purpose.

As shown in FIG. **3,** the elbows **28** and **30** are each equipped with a short nipple **48** extending downwardly through an opening **50** in the floating head **10.** A union **52** secures the assembly in position. A short length of pipe **54** extends downwardly from the union **52.** In a typical arrangement the floating head may be **18-20** inches in diameter with the elbows **28** and **30** approximately **16** inches apart on centers. The pipes **54** may extend approximately **8** inches below the floating head **10** before their attachment to the cleaning tubes. These pipe projections serve to prevent the head **10** from traveling over pool steps and other shallow obstructions which might bump the rotating swivel assembly and interfere with its operation.

Two flexible tubes **56** and **58** are attached to the respective pipes **54.** Each tube is equipped with a nozzle **60** of the flat fan spray pattern type with a fixed size orifice at one end of the tube. As water is ejected from the nozzle, the reaction force of the water jet against the pool water causes the tube to zig-zag or snake from side to side and in circular patterns around the pool bottom, thus stirring up debris for the filter system of the pool to remove. Flat fan spray nozzles **60** are eminently suitable for tubing that is manufactured in coils, and has a coil set. This natural coil set causes either one side or the other of the tubing to lie on the bottom. The nozzle is set to spray perpendicularly to the coil set of the tubing, so that half the ejected water from the nozzle must impinge against the pool bottom at all times when the nozzle is against the bottom.

The flexible cleaning tubes **56** and **58** are preferably of different lengths. For example, one of the tubes may be **15** feet long, causing it to range far away from the floating head and to reach the deepest parts of the pool. The other tube may be **5** feet long, and touches the bottom in the shallow end only. However, it serves to keep sediment suspended at all times, and cleans the side walls of the pool when it is brought within reach by the head.

Attached to tee **24** is a swivel impeller and drive assembly generally designated at **62.** As best shown in FIGS. **3** and **4,** this comprises a downwardly extending pipe **64** carrying a hollow swivel joint **66** from which depends another short length of pipe **68** closed by cap **70.** All of these parts may be conveniently made of plastic. A metal impeller tube **72** communicates with the pipe **68** through the cap **70.** On the other side of cap **70** a flat plastic or metal rudder **74** is secured by means of cap screw **76.** The tee **24** and its depending swivel drive assembly **62** may be offset from the geometrical center of the floating head **10** so as to facilitate irregular directional movement of the device around the pool.

The swivel drive assembly **62** is the heart and "brain" of the cleaning device of this invention since it impels and guides the floating head **10** around the pool surface. Its principle is new but simple. The lower part of the assembly rotates freely around the hollow supporting pipe **64.** The assembly has only two essential parts besides the swivel itself; an impeller tube **72** bent at an angle of e.g., 3°–10° from a radial line drawn horizontally from the swivel center which causes counterclockwise swivel rotation when water is ejected through the tube **72** under pressure; and the flat metal or plastic rudder **74** fastened to the same part of the swivel as the impeller tube, set vertically and projecting to one side of swivel center opposite to the angle bend of the tube **72.** This rudder **74** has little effect on the swivel action when the head **10** is stationary, thus allowing the bent tube **72** to cause CCW swiveling action, but when the head **10** is moving across the water, the rudder **74** tends to cause clockwise swivel action — opposing the action of the tube **72.** Thus, the drive jet will always cause the assembly to swivel when the head **10** is stalled, but may not swivel at all or swivel in the opposite direction when the head **10** is moving, depending on the speed of movement, since the pool water exerts more force against the rudder the faster it is propelled through the water. The result is random travel of the head but programmed to prevent entrapment.

The manner in which the impeller and rudder assembly will swivel around upon entrapment of the head **10** is illustrated at the lower right hand corner of FIG. **1.** Here the device shown in broken lines has been driven into the corner of the pool. The impeller action of the tube **72** has caused the drive assembly to rotate counterclockwise from the angular position of the device shown in solid lines at the center of the pool. The action of the impeller will now drive the device out of the corner to again randomly proceed across the pool surface.

From the foregoing, it will be seen that the invention embodies a new and unique method of propelling floating cleaner head around the pool surface via a swiveling drive impeller which swivels when the head is stopped for any reason until it reaches a position to drive the head away from the trapped position, no matter what caused it or where it is on the pool surface. When the head begins to travel across the surface slowly, the swivel does not rotate. At higher speed of travel, the impeller and swivel tend to rotate in a direction opposite to that evidenced when the head is not moving.

As a result, the novel pool cleaning device travels completely around the perimeter of any shape pool, cannot be trapped by any corner or obstruction, and makes occasional side trips out into the middle of the pool, sometimes crossing over from side to side or end to end, sometimes lingering in an area performing a roughly oval oscillating movement, finally returning to its travel around the pool perimeter. Over a few hours time, the head will traverse all the area of the pool surface several times. It may be placed in the pool in the evening and allowed to run all night. Results have been perfect, in that it never stalls or becomes trapped, it

covers the entire surface and bottom areas and cleans the pool bottom and sides to the point where no debris is visible the following morning. Manual vacuuming is no longer required.

It will be understood that the device of the invention is adapted to many modifications within the spirit of the invention and range of equivalents to which it is entitled. The description of materials and dimensions are for illustrative purposes and are not intended to be limitative of the scope of the invention. The principle of swivel impeller and rudder may be incorporated in any device which is adapted to float upon and automatically travel over the surface of any body of liquid. Thus, it may be used in pond aerators, pond treaters, distributing devices for insecticides, chemicals and the like and even in toy ships and amusement devices.

What I claim is:

1. In a floating device, for automatic travel in a body of liquid, comprising a movable float carrying a jet impeller, the improvement comprising a swivel carrying said impeller and also carrying a rudder, the impeller being arranged and directed to cause rotation of the swivel and the rudder tending to counteract such rotation whereby the impeller and rudder cause the float to move in an irregular pattern around the body of liquid and to move away from obstructions it may engage.

* * * * *