No. 839,645. PATENTED DEC. 25, 1906.

R. RIEDER.

DYEING LEATHER.

APPLICATION FILED NOV. 14, 1904.

4 SHEETS—SHEET 1.

Fig. 1

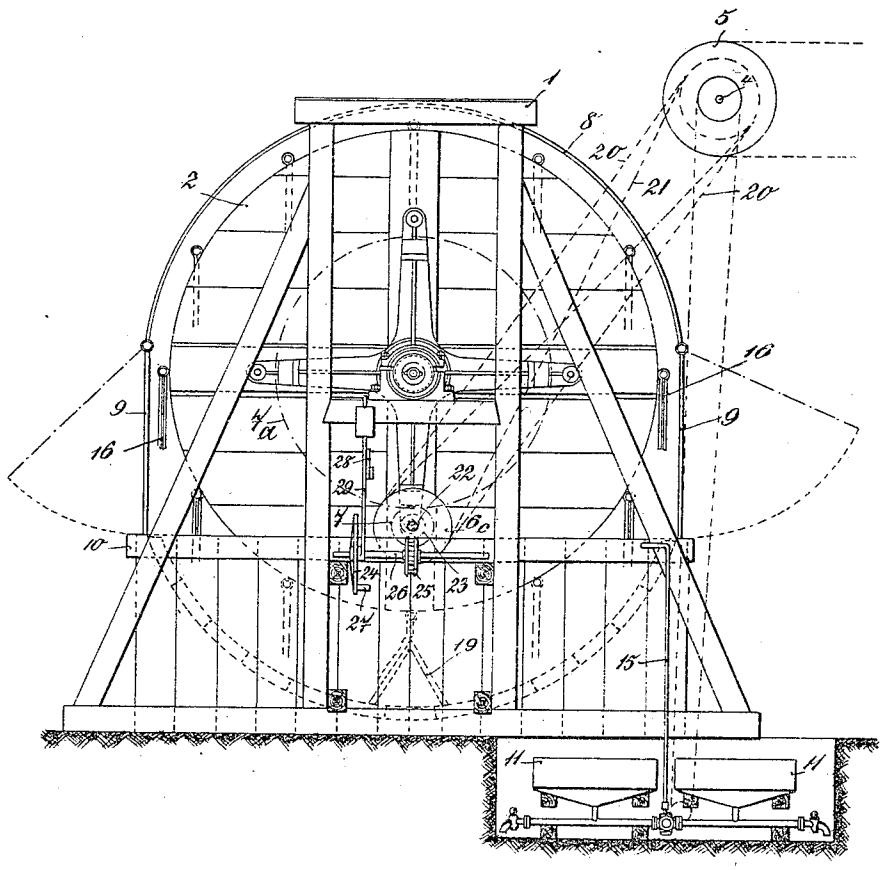

Witnesses:
Eugene M. Sliney
L. C. Hilton

INVENTOR
Richard Rieder.
By
H. B. Willson
Attorney.

THE NORRIS PETERS CO., WASHINGTON, D. C.

No. 839,645. PATENTED DEC. 25, 1906.

R. RIEDER.

DYEING LEATHER.

APPLICATION FILED NOV. 14, 1904.

4 SHEETS—SHEET 2.

Fig. 2

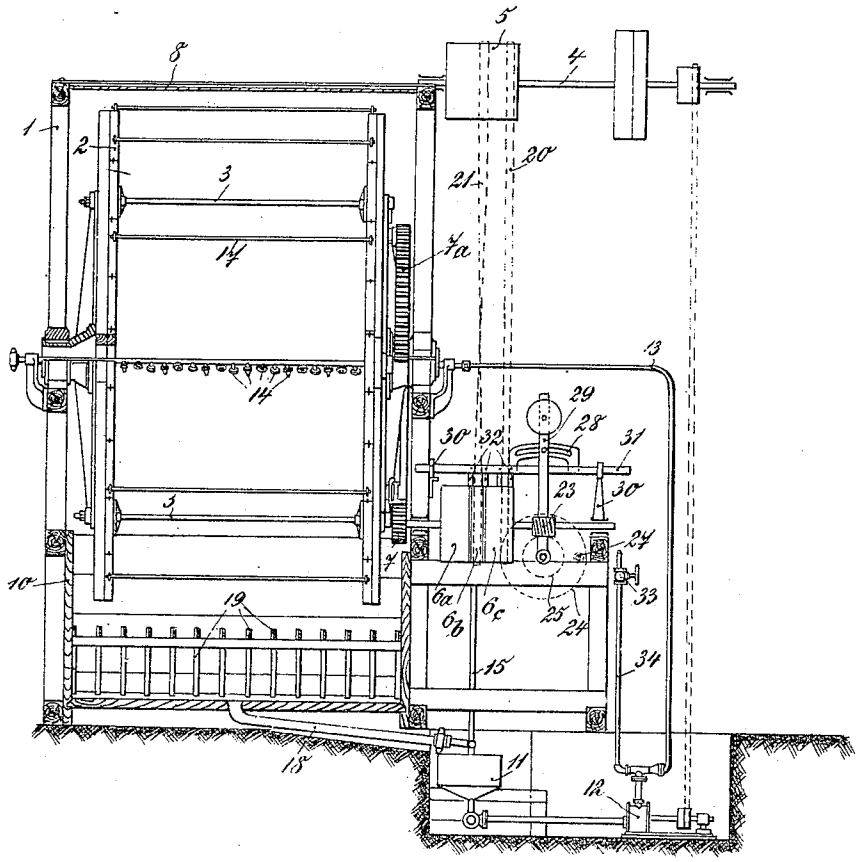

Witnesses:
Eugene A. M. Sliney.
L. C. Hilton.

INVENTOR
Richard Rieder
By H. B. Willson
Attorney

THE NORRIS PETERS CO., WASHINGTON, D. C.

No. 839,645. PATENTED DEC. 25, 1906.

R. RIEDER.

DYEING LEATHER.

APPLICATION FILED NOV. 14, 1904.

4 SHEETS—SHEET 3.

Fig. 3

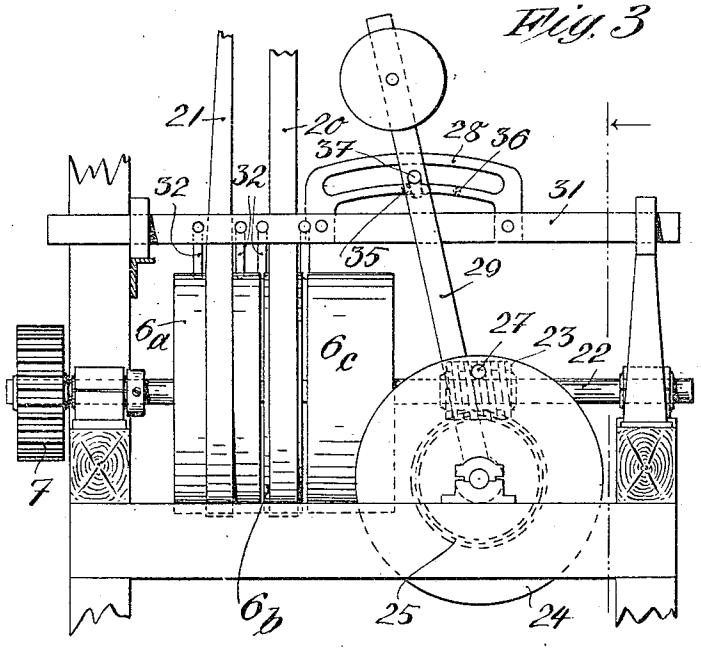

Fig. 4

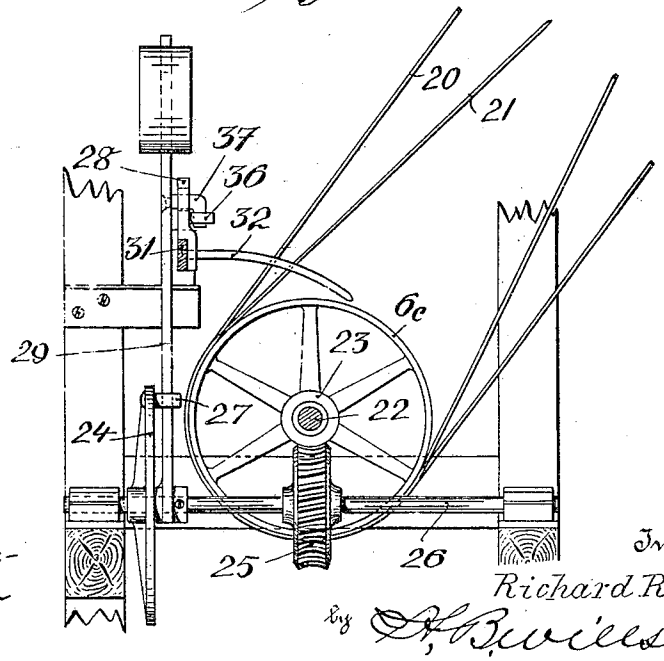

Witnesses:-
C. Mumber
G. Hilton

Inventor
Richard Rieder
by A. B. Willson
Attorney

THE NORRIS PETERS CO., WASHINGTON, D. C.

No. 839,645. PATENTED DEC. 25, 1906.

R. RIEDER.

DYEING LEATHER.

APPLICATION FILED NOV. 14, 1904.

4 SHEETS—SHEET 4.

Fig. 5

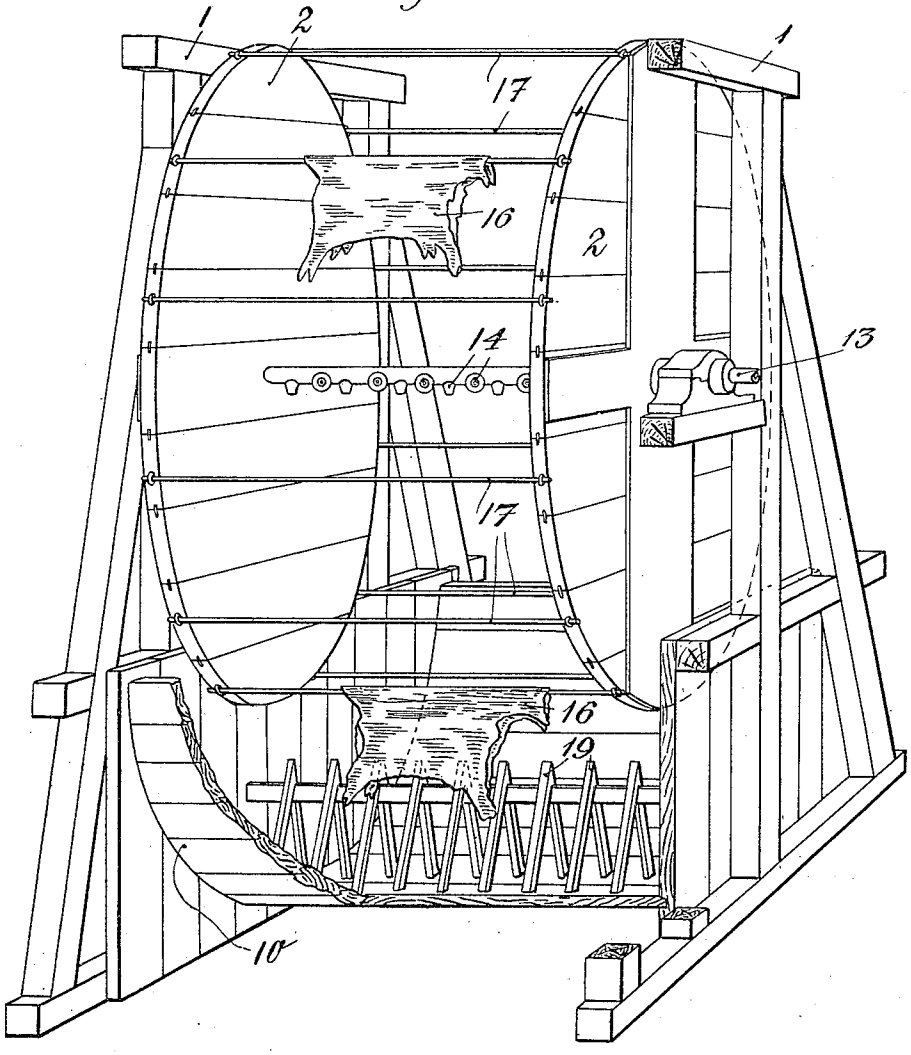

Witnesses
D. Z. Jonsson
M. R. Godfrey

Inventor
Richard Rieder
By
A. B. Willson & Co.
Attorneys.

THE NORRIS PETERS CO., WASHINGTON, D. C.

UNITED STATES PATENT OFFICE.

RICHARD RIEDER, OF OSTERWIECK-ON-THE-HARZ, GERMANY.

DYEING LEATHER.

No. 839,645. Specification of Letters Patent. Patented Dec. 25, 1906.

Application filed November 14, 1904. Serial No. 232,699.

To all whom it may concern:

Be it known that I, RICHARD RIEDER, a subject of the German Emperor, and a resident of Osterwieck-on-the-Harz, Germany, have invented new and useful Improvements in or Connected with Dyeing Leather, of which the following is a specification.

This invention consists of an improved process of dyeing skins or leathers, which consists in folding the skins together and stretching, slacking, and dragging the skins over projections to alter the structure of the surface of the leather so that the cells or "low-lying" parts of the grain are evenly and perfectly dyed, the access of the dye to the wrinkles and grooves being facilitated by the stretching, slacking, and dragging process.

If in the present process the leather is to be dyed only on the grain side, the leather or the skins can be folded in any known manner or be laid together with their flesh sides inside, and thus be exposed to the dye, their structures being at the same time submitted to the above-mentioned treatment. This method of dyeing leather, while continuously altering its structure, is of importance, especially when leather with rough or wrinkled grain is to be dyed. The extending and slackening of the skins during the dyeing process can be accomplished in different ways, particularly by mechanical means. The skins can be pulled across suitable objects, as plugs, cross-bars, or rollers.

In the annexed drawings an example of an apparatus is shown which may be used for carrying out the process.

Figure 1 shows a front elevation and an apparatus for carrying out my process, the conduits for supplying the dye solution being omitted. Fig. 2 is a side view of the apparatus, partly in section. Fig. 3 is a detail side elevation, and Fig. 4 is a detail front view. Fig. 5 is a perspective view and partial section of the machine.

Referring to the drawings, in a framework 1 of beams a wheel 2 is provided, it being revoluble on a shaft. This wheel 2 consists of two circular sides made up of planks, as shown in Fig. 2. The wheel is provided with cross-bars 3 and is driven from shaft 4 by suitable belt-pulleys 5 6 and gearing 7. The wheel 2 is surrounded by a suitable casing 8, by means of which the space between the disks of wheel 2 is shut off from the outside. In the casing doors 9 are provided, by means of which access is given to the interior of the wheel.

The wheel 2 is rotated from shaft 4, which carries a pulley 5. From the pulley a straight belt 20 and a crossed belt 21 run to pulleys 6^a, 6^b, and 6^c, respectively, arranged next to each other on shaft 22. From the shaft 22 the motion is transmitted by means of gear-wheels 7 and 7^a to wheel 2. There is on shaft 22 a worm 23, which gears with a worm-wheel 25, rigidly connected with disk 24 on shaft 26. On disk 24 there is a pin 27, which during its motion strikes against a pendulum 29, which swings in guide 28. This pendulum 29 is connected to a rod 31, which moves in guides 30. On this rod there are pins 32 or similar contrivances. Between these pins or similar contrivances 32 the belts 20 and 21 are arranged in such a manner that by shifting rod 31 with pins 32, belts 20 and 21 are equally shifted on pulley 5 and pulleys 6^a, 6^b, and 6^c, respectively. As pulley 6^b is loose in shaft 22, the belt running on this pulley 21 will be idle. By this arrangement wheel 2 changes its direction of rotation after each revolution and revolves once to each side. When pulley 24 revolves, pin 27 strikes against pendulum 29, pushes this to one side, shifting at the same time rod 31 with pins 32, and the belt-gears 20 21 are equally shifted. In consequence of this reversing, wheel 2 will revolve in the opposite direction until pin 27 strikes against pendulum 29 and pushes this to the opposite side, so that the belt-gears 20 21 are again reversed.

The wheel 2 is so mounted that its lower part is within a vat 10, which may be made of wood and which is intended for receiving the dye solution as it drips from the skins. The dye solution is kept in receptacles 11, of metal, such as copper, which are let into the ground underneath the vat 10. By means of a pump or an injector 12 the dye solution may be carried from these receptacles through pipes 13 to the nozzles 14, which are arranged in the axle of the wheel 2 and projected in different directions. The opening and closing of the joint discharge-cock of the two receptacles 11 is effected by means of a key 15. By means of pipe 34, which is provided with a valve 33, the dye can be heated, if required, by connecting pipe 34 to a boiler.

The skins or leathers 16 (see Fig. 1) are suspended on cross-bars 17, which connect the two sides of the wheel and are arranged

on the circumference of the same in such a manner that they can turn. According to the effect to be obtained the skins are suspended in the wheel 2 from the rods 17, folded double, or placed together in pairs, with the flesh sides inward, or they may be arranged singly. After the skins have been suspended in it the wheel 2 is rotated forward and backward alternately, and by means of pump 12 the slightly-warmed dye solution is conveyed from receptacle 11, through piping 13, to the outlet-apertures 14. In this manner the dye is equally distributed over the skins and leathers passing the spraying appliance. The dye solution running off the skins and leathers flows through vat 10 and the discharge-pipe 18 back into receptacles 11, so that it may be used over again.

In order to continuously alter the structure of the skins and leathers during the dyeing, that the low-lying parts or depressions of the grain may also be dyed in a uniform manner, suitable obstacles 19, such as rods, are arranged in the vat 10, which form a kind of grating, across which the skins and leathers are drawn. During this time the necessary dragging and readjusting of the leathers and skins are effected. Instead of the rods I may use pegs, cross-bars, rollers, and the like.

If the skins are to be dyed by washing them with dye, the dye-vat 10 is partly filled with dye and the wheel 2 adjusted as low as necessary, so that the two side faces of the wheel will dip the rims or chains on which the double-folded or single suspended skins are fastened into the dye solution by the movement of wheel 2, and thus pass the skins through the dye solution beneath the surface of the latter or move them along the same. Here special provisions for extending the skins are not necessary, as the vat itself and the raising and lowering of the skins will sufficiently cause the necessary plaiting and effect an even dyeing of the deeper grooves and pores of the grain

Having thus described my invention, what I claim as new, and desire to secure by Letters Patent, is—

The herein-described process of dyeing leather, which consists in first laying or folding the leathers together with flesh sides in contact, then subjecting them to a stretching, extending and slackening operation by drawing them across plugs, cross-bars and the like and spraying or washing the leather with a dyeing liquor while undergoing said operation, whereby all parts of the grain side only of the leather are presented to the dye compound.

In witness whereof I have hereunto set my hand in the presence of two witnesses.

RICHARD RIEDER.

Witnesses:

HENRY HASPER,

WOLDEMAR HAUPT.