July 26, 1949. R. J. DETUNO 2,477,118

HIGH-FREQUENCY INDUCTION HEATING APPARATUS

Filed Sept. 28, 1945

FIG. 1

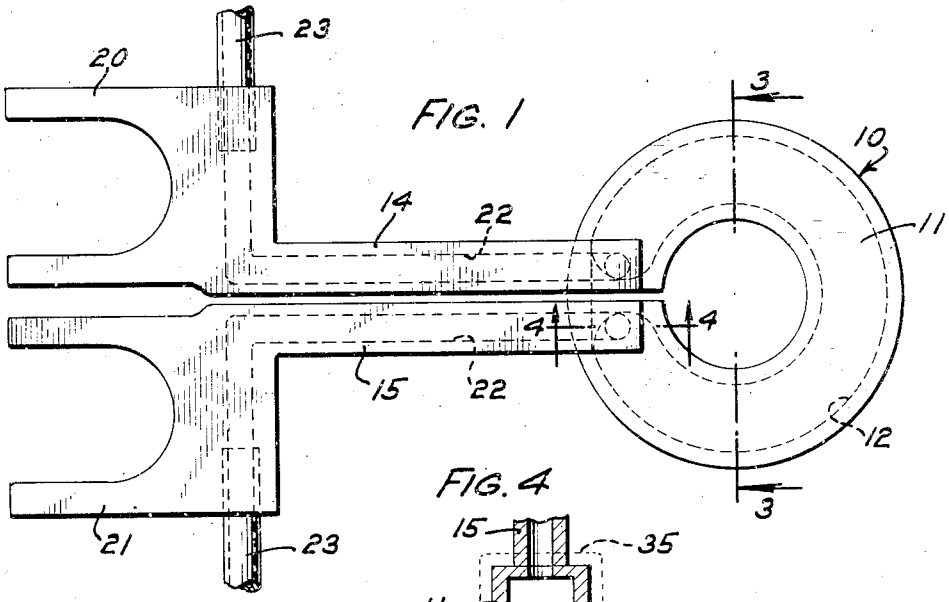

FIG. 4

FIG. 2

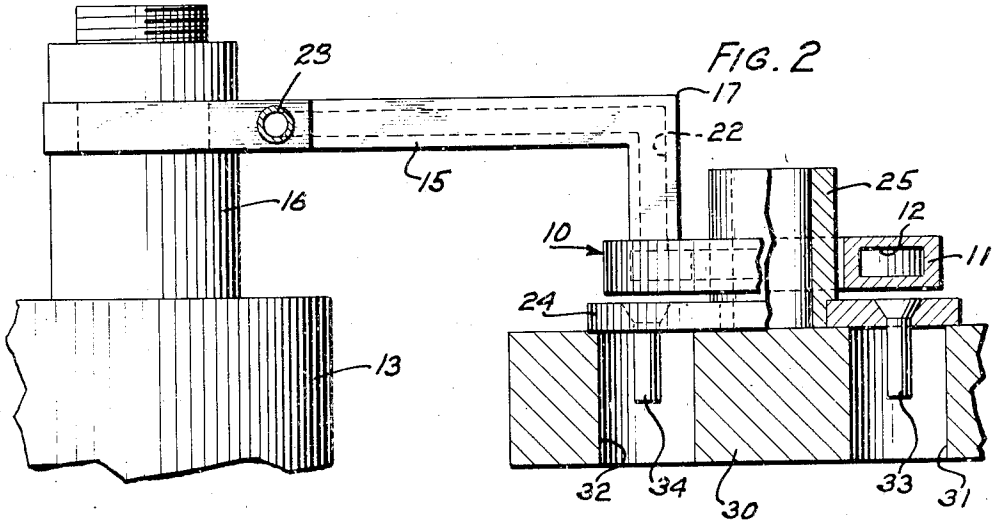

FIG. 3

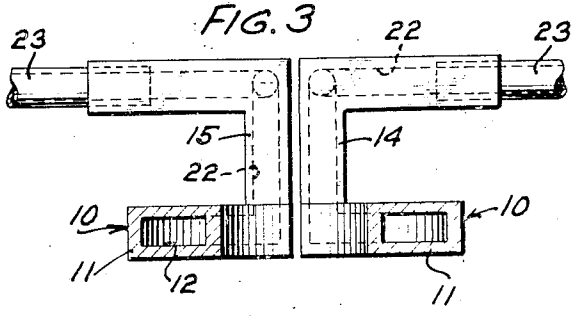

INVENTOR
R. J. DETUNO
BY Harry E. Dunkle
ATTORNEY

Patented July 26, 1949 2,477,118

UNITED STATES PATENT OFFICE

2,477,118

HIGH-FREQUENCY INDUCTION HEATING APPARATUS

Rocco J. Detuno, Chicago, Ill., assignor to Western Electric Company, Incorporated, New York, N. Y., a corporation of New York

Application September 28, 1945, Serial No. 619,129

5 Claims. (Cl. 219—47)

1

This invention relates to heating apparatus and more particularly to electrical high frequency induction heating apparatus.

In many instances where circular or annular objects are heated by electrical induction heating, multi-turn coils cannot be used for one reason or another, depending upon the particular circumstances. Where multi-turn coils have not been practicable, single-turn coils have been used. However, a serious problem presents itself when heating circular objects with a conventional single-turn coil to obtain uniform heating throughout a 360° area of revolution. Practical experience has shown that there is always a "cold spot" in the area adjacent to the space between the ends of the single-turn coil.

An object of the present invention is to provide a single-turn induction heating coil which will furnish uniform heating throughout a full 360° turn.

In accordance with one embodiment of the invention, a single-turn induction heating coil is provided with leads which, at the point of their attachment to the ends of the coil, are substantially narrower in cross section than the width of the conductor forming the turn of the coil in order to provide a stronger high frequency field at the ends of the coil, thereby maintaining a more uniform field throughout the 360 degrees of the coil turn.

A complete understanding of the invention may be had by reference to the following detailed description taken in conjunction with the accompanying drawings, in which

Fig. 1 is a plan view of an induction heating coil embodying the features of the invention;

Fig. 2 is a side elevation partly in section of the apparatus illustrated in Fig. 1, showing its relationship to an object being heated;

Fig. 3 is a vertical section of the apparatus taken on the line 3—3 of Fig. 1; and

Fig. 4 is a vertical section of the apparatus taken on the line 4—4 of Fig. 1 showing the joint between a lead and the coil and indicating the path of part of the high frequency field.

Referring to the drawings, it will be seen that the apparatus is provided with a single-turn coil 10 formed from a conductor 11 having a rectangular cross section and provided with a cooling duct 12 which extends through the turn of the coil. The coil 10 is electrically connected to a source of high frequency current 13 through a pair of leads 14 and 15 each having one end connected to the coil 10. At the opposite end, the leads are provided with a pair of substantially U-shaped terminals 20 and 21 which are secured

2

to the terminals 16 of the source of high frequency current 13. The leads 14 and 15 are secured to the ends of the coil 10 normal to the plane of the coil and extend upward to a point 17, thence at a convenient angle to the terminals 16 of the source of high frequency current 13. Each of the leads is provided with a passage 22 which connects at one end to the cooling duct of the coil and at the other end to a pipe line 23 containing a circulating liquid coolant. The cross section of the leads 14 and 15, at their points of attachment to the coil 10, is narrower than the width of the conductor 11. It is important that at the point of attachment to the coil, the outer surfaces of the leads be between and substantially spaced from opposite sides of the conductor 11 which in this embodiment are the inner and outer peripheral edges of the coil 10.

Fig. 2 illustrates one application of the invention. An annular flange 24, which is to be brazed to a cylindrical pipe 25, is shown being carried on a movable article holding table 30 which is more fully described in the copending application of J. R. Johnson, Serial No. 626,561, filed November 3, 1945. The table 30 is provided with apertures 31 and 32 to freely accommodate a pair of studs 33 and 34 which are to be brazed to the flange 24. It is apparent that in order to provide brazing heat at the studs and at the juncture of the pipe 25 and the flange 24 simultaneously, the high frequency field must affect a greater area in the plane of the flange 24. This is accomplished by making the width of the conductor 11 greater than its height (Fig. 2) thus providing a longer path for the field along the area of the flange 24.

It has been found that the "cold spot" which ordinarily exists between the ends of single-turn induction heating coils is for all practical purposes eliminated by the invention herein. Although the explanation for this phenomenon is not clearly known, it is believed that the formation of a "cold spot" between the ends of the coil is prevented by the use of leads 14 and 15 which are smaller in cross section than the width of the conductor 11 at their point of attachment to their conductor, thus providing a greater unimpeded path 35 (Fig. 4) for lines of force in the immediate vicinity of the ends of the coil.

What is claimed is:

1. In an electrical induction heating apparatus, a source of high frequency current, a single-turn coil formed from a hollow electrical conductor, said coil having adjacent ends within the outer peripheral boundary of the coil turn, and a pair of hollow electrical leads connected to the

ends of said coil at right angles to the plane of said coil, said leads having a narrower cross section than the width of said conductor at the point of said connection to said coil, and the outer surfaces of said leads at the point of connection to said coil being between and spaced from the inner and outer peripheral boundaries of said coil.

2. An electrical induction heating apparatus comprising a single-turn coil formed from an electrical conductor, said coil having adjacent ends within the outer peripheral boundary of the coil turn, and a pair of electrical leads connected to the ends of said coil at right angles to the plane of said coil, said leads having a narrower cross section than the width of said conductor at the point of said connection to said coil, and the outer surfaces of said leads at the point of connection to the coil being between and spaced from the inner and outer peripheral boundaries of the coil turn.

3. An electrical induction heating apparatus comprising a single-turn coil formed from an electrical conductor, said coil having adjacent ends within the peripheral boundary of the coil turn, and a pair of electrical leads connected to the ends of said coil and at an angle to the plane of said coil, said leads having a narrower cross section than the portion of the conductor at the point of said connection to said coil, and the outer surfaces of said leads at the point of connection to the coil being between and spaced from opposite boundaries of said conductor.

4. An electrical induction apparatus comprising a single-turn coil formed from an electrical conductor, said coil having adjacent ends within the outer peripheral boundary of the coil turn, and a pair of electrical leads connected to the ends of said coil and on the face of the conductor opposite to the face of the conductor adjacent the desired heating area, said leads having a narrower cross section than the width of said conductor at the point of said connection to said coil, and the outer surfaces of said leads at the point of connection to the coil being between and spaced from opposite boundaries of said conductor.

5. An electrical induction heating apparatus comprising a single-turn coil having adjacent ends within the outer peripheral boundary of the coil turn and being formed from an electrical conductor having an oblong cross section to provide a greater heating area, and a pair of electrical leads connected to the ends of said coil at right angles to the plane of said coil and on the face of the conductor opposite the face of the conductor adjacent the area of desired maximum heating, said leads having a narrower cross section than the width of said conductor at the point of said connection to said coil, and the outer surfaces of said leads being between and spaced from the inner and outer peripheral boundaries of the coil turn.

ROCCO J. DETUNO.

REFERENCES CITED

The following references are of record in the file of this patent:

UNITED STATES PATENTS

Number	Name	Date
2,321,189	Dravneek	June 8, 1943
2,353,130	Dravneek	July 11, 1944
2,394,944	Stanton	Feb. 12, 1946
2,397,990	Sherman	Apr. 9, 1946
2,402,508	Strickland	June 18, 1946
2,414,141	Denneen et al.	Jan. 14, 1947