June 24, 1930. A. A. THOMAS 1,767,777

LOUDSPEAKER

Filed Oct. 15, 1926

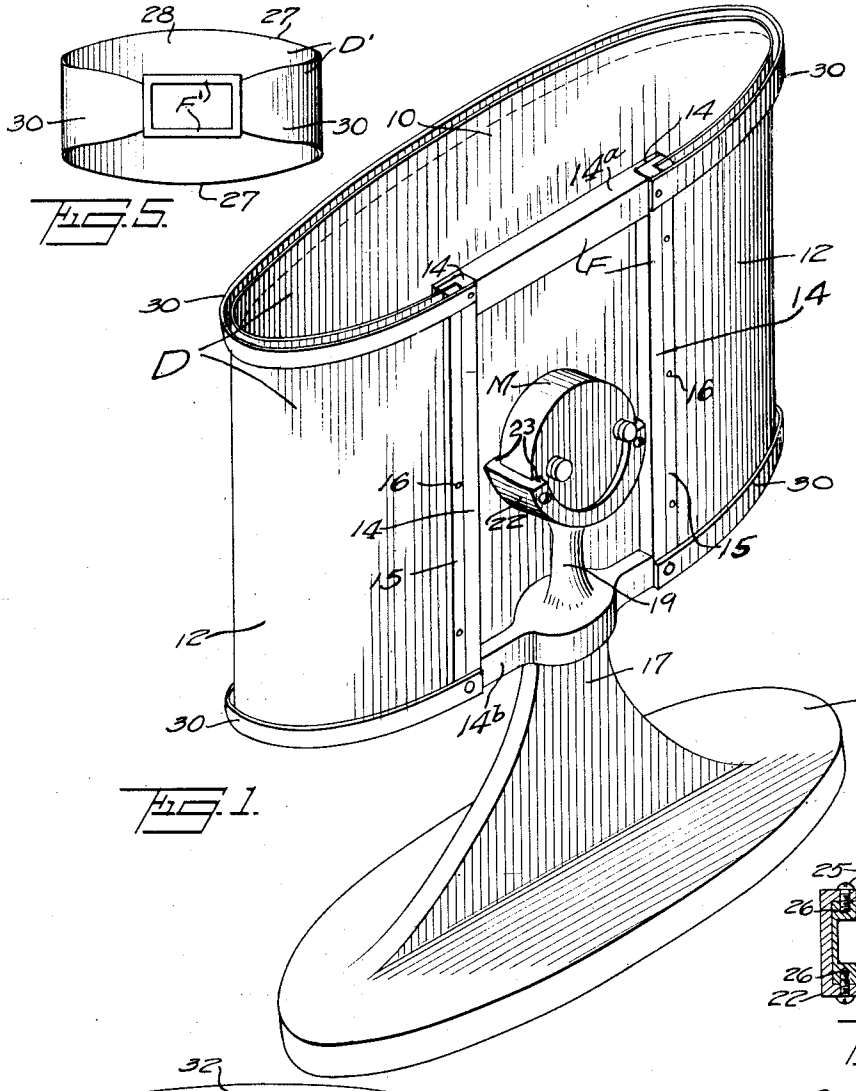

FIG. 5.

FIG. 1.

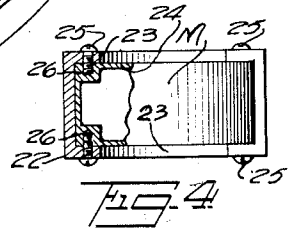

FIG. 4.

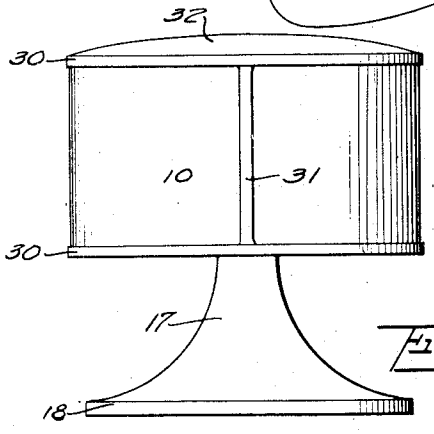

FIG. 2.

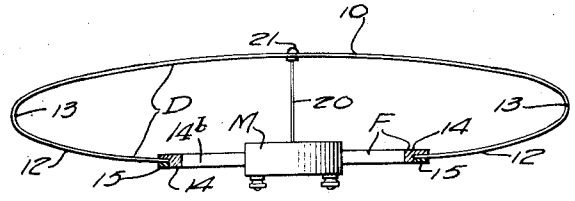

FIG. 3.

INVENTOR

Adolph A. Thomas

Patented June 24, 1930 1,767,777

UNITED STATES PATENT OFFICE

ADOLPH A. THOMAS, OF NEW YORK, N. Y.

LOUD-SPEAKER

Application filed October 15, 1926. Serial No. 141,692.

My invention is for a loudspeaker having an acoustic diaphragm of novel construction and improved operation. This diaphragm is capable of giving a reproduction of great volume and fine quality without a horn or other mechanical amplifier.

In one form of my invention, the characteristic feature of my new diaphragm resides in a construction whereby a sheet of acoustic material is rigidly supported at two opposite ends along substantially parallel edges. In one form of my invention, this sheet of material is flexed to form a stiff central section and a pair of inwardly curved end sections which act like spring supports for the central section. These resilient end sections maintain the central section under constant tension, which is predetermined for the best acoustic results. Suitable actuating means is associated with the central section, which in itself constitutes a diaphragm adapted to vibrate over its entire area with substantially uniform amplitude. The supporting end sections offer the necessary resistance to the force actuating the diaphragm, and yet they do not hold the central section (the diaphragm proper) rigidly bound at its periphery. The practical advantages of this construction will be pointed out as the specification proceeds.

Considered in another aspect, my new sound reproducer comprises a membrane held constantly under tension and vibrated by a driving unit connected substantially to the center thereof. The vibrations of the stretched membrane take place in the direction of its axis.

So that those who are versed in this art may understand my invention and practice the same, I shall describe in detail the embodiment illustrated in the accompanying drawings, in which

Fig. 1 is a rear perspective view of a loudspeaker provided with my new diaphragm;

Fig. 2 shows a front view of the instrument on a reduced scale;

Fig. 3 represents a diagrammatic plan view;

Fig. 4 is a fragmentary detail view illustrating a convenient way to secure the driving unit in its support; and

Fig. 5 shows diagrammatically, in rear view, a diaphragm with curved edges.

Before proceeding with a detailed description of these figures, I want to make it clear that the particular construction herein shown has been selected merely as a simple practical example of my invention, and is not to be regarded in a restrictive sense, unless so specified in the claims.

Referring to Figs. 1 and 3, the diaphragm there shown is indicated as a whole by a sheet D, preferably of uniform thickness, which consists of a main central section 10 and a pair of inwardly curved end sections 12. The sheet D is made of suitable acoustic material, among which I may mention resilient sheet metal, stiff resilient paper, celluloid, parchment, veneer, and various composition materials adapted to the purpose. It goes without saying that non-metallic materials should be made weather-proof, or as nearly so as possible. If the diaphragm is to be of sheet metal, there may be used copper, brass, aluminum, an aluminum alloy known in the trade as duralumin, steel, and various other metals and alloys possessing the requisite properties. A diaphragm of maple veneer produces tones of particularly clear natural quality free from metallic harshness.

The sheet D is flexed along the lines roughly indicated at 13 in Fig. 3, and the flexed end sections 12 are secured to a fixed support of any suitable construction. In the present instance, this support is shown as a rectangular frame F having a pair of vertical side bars 14 connected by a top bar 14^a and a bottom piece 14^b. The edges of diaphragm sections 12 are attached to the side bars 14 in any practical way, as by means of clamping strips 15 held in place by screws or rivets 16. The frame F is mounted on a stand 17 rising from a base 18.

It will be observed, as clearly shown in Figs. 1 and 3, that the end sections 12 are of substantial area and are in effect auxiliary tensioned diaphragms rigidly held along their inner edges and free at their outer edges 13 where they merge into the main diaphragm

10. The end sections 12 may also be regarded as resilient arms mounted at 15 and at their free outer ends 13 supporting the main diaphragm 10. The resiliency at the supporting ends 13 is such that the diaphragm 10 vibrates with substantially uniform amplitude over its whole surface. The precise length of the resilient supporting sections 12 can only be determined by experiment in each particular case, depending on the size of the diaphragm, the elasticity of the material, and probably other factors. In Fig. 3 the diaphragm sheet is continuously curved in the form of a flat ellipse in which the distance between the supported ends is about one-half the length of the major axis of the ellipse. I give these proportions by way of example merely, and not as a limitation of my invention.

An electromagnetic unit M is carried by a post 19 on frame F and is connected through a rod 20 to the diaphragm section 10 at the point 21, which is at the center of the diaphragm, or approximately so. Any practical form of driving means may be employed, and I have chosen an electromagnetic unit by way of illustration. There are many types of such units on the market, and the member 20 represents diagrammatically any kind of operative connection between unit M and diaphragm D. If the diaphragm is of magnetic material, or is otherwise provided with a magnetic armature, the connection 20 may be dispensed with and the magnetic poles of unit M brought close to the diaphragm or armature in operative relation thereto. To hold the unit rigidly on post 19 and permit easy attachment and removal thereof, I provide a semi-cylindrical saddle 22 having a flange 23 at one or both ends. The cylindrical casing 24 of unit M fits snugly into the saddle and is held therein by screws 25, which pass through flange or flanges 23 into screw-threaded bosses or lugs 26 provided in the casing.

When the diaphragm D is operated, the acoustic section 10 vibrates bodily with substantially equal amplitude over its entire area due to the fact that the flexed end sections 12 form a resilient support for the central section along the bends 13. In other words, we have here a diaphragm 10 resiliently supported at a pair of opposite edges and having such freedom of movement over its entire surface as to be practically free from a natural period of vibration. Consequently, the diaphragm responds faithfully to all ranges of frequency within practical limits. In the operation of the diaphragm, the resilient end sections 12 vibrate with the acoustic section 10, but not necessarily at the same frequency and amplitude, for the primary function of sections 12 is to support section 10 for free acoustic vibration. In another aspect, the end sections 12 may be considered auxiliary diaphragms rigidly held along one edge and tending to augment the acoustic effect of the main diaphragm 10. It will be understood by those skilled in the art that different areas of the diaphragm vibrate at different frequencies of the actuating unit. For example, at high frequencies only a small central portion of the diaphragm will be set in vibration. As the applied frequency decreases, more surface area comes into play, so that all tones used in practice are reproduced with substantially equal efficiency and fidelity.

As acoustic experts know, a completely edge-bound diaphragm, irrespective of size, shape or material, has a fundamental note of its own, which predominates whenever the diaphragm is vibrated at or near that particular frequency. The result is a false or at least distorted reproduction. To avoid that defect in edge-bound diaphragms, manufacturers of cone speakers have resorted to the expedient of leaving the cone free at the periphery. But these so-called free floating cones, while they have no natural period of vibration, are inherently faulty in that they lack the necessary strain condition for natural reproduction. What I mean is this: when a free-edged diaphragm is actuated, there is nothing around the edge (except air) to resist the push and pull of the external driving force at the center, and the diaphragm acts somewhat like a loose sheet fluttering in the wind. The analogy is exaggerated, but it serves to convey my meaning. For proper acoustic reproduction, the vibratory diaphragm must be placed in a state of elastic strain by the actuating element. In edge-bound diaphragms, this condition is brought about by holding the diaphragm rigid around the circumference, but such diaphragms, as already mentioned, possess the disadvantage of a natural frequency.

Now, the diaphragm of my invention is under constant tensional strain produced initially by flexing the end portions 12 inwardly and holding them in flexed position. At the same time, the acoustic section 10 is free to vibrate bodily over its whole area with no fundamental note of its own, thus reproducing all audible frequencies in their proper tonal values. It is clear from Fig. 3 that the normal tension of the stretched diaphragm is not communicated to the driving rod 20, at least not to any appreciable extent, so that the driving unit does not have to overcome any initial pull or push load before acting on the tensioned diaphragm sheet. At the present time I know of no mathematical formula for determining the correct initial strain to which the diaphragm shall be subjected to produce the best results. The size and material of the diaphragm have a great deal to do in finding out where the sheet shall be bent and how far apart the two opposite edges shall be supported for the most efficient operation of the diaphragm in any particu-

lar instance. The right amount of stiffness that a diaphragm of certain size ought to have can only be determined by actual tests. In some cases it may be desirable to make the central section a little thicker than the end sections in order to obtain the proper degree of mechanical resistance to the external actuating force. These things are within the experimental skill of the artisan. If desired, the supporting bars 14 may be made adjustable toward and away from each other in order to regulate the initial tension of diaphragm 10, as will be understood without further explanation. Obviously, the greater the inertia of the diaphragm, the greater must be the driving force of the electromagnetic mechanism. The material and dimensions of the diaphragm are selected to suit best the purpose of a particular instrument.

The shape or contour of the sheet from which my new diaphragm is formed, may vary. In Fig. 1, the sheet is rectangular, with opposite sides parallel. In Fig. 5, the diaphragm D′ has curved edges 27 and the acoustic portion 28 approaches the form of a circle or ellipse. Any other practical shape of diaphragm may be used. Obviously, what has been said about diaphragm D is fully applicable to diaphragm D′ without the need of repetition.

In a finished loudspeaker having a diaphragm constructed under my invention, the edges of the diaphragm may be concealed behind a pair of strips 30 connected by a cross-piece 31 and conveniently attached to frame F or otherwise supported. These strips, which are slightly spaced from the diaphragm so as not to interfere with its vibrations, may carry a cover 32 to conceal the top and inside of the diaphragm. In fact, the entire diaphragm may be surrounded by an ornamental grille or other covering sufficiently open to allow free passage of sound waves.

Attention is directed to the utter simplicity of my new diaphragm, which is made from a single sheet of material. When the diaphragm is rectangular, as in Fig. 1, a long sheet or roll of the material used is cut into pieces of the required length, and these pieces are then bent into proper shape, as described. There is here no joining of overlapping edges, as in cone diaphragms heretofore constructed, and there is no need of a big supporting frame as in edge-bound cone speakers. In fact, a large diaphragm constructed in accordance with my invention may be mounted on a comparatively small frame. This is clear from the exemplification in Fig. 5, where the circular or oval diaphragm 28 extends considerably beyond the little supporting frame F′ to which the bent sides 30 are connected.

Although I have described my invention in the embodiment of a telephone receiver, it is evident that the novel diaphragm herein set forth may be used in a transmitter. In that case, the rod 20 would represent an operative connection to transmit the vibrations of the diaphragm to an electromagnetic mechanism adapted to generate current impulses in accordance with the movements of the diaphragm.

I claim as my invention:

1. In an electric acoustic device, a diaphragm consisting of a sheet of resilient material so flexed as to provide a central section and a pair of inwardly curved end sections, means engaging the edges of said end sections to support the flexed sheet in a condition of normal strain, said end sections being of sufficient length to form a resilient support for said central section to permit the latter to vibrate with substantially equal amplitude over its entire surface, and driving mechanism operatively associated with said central section for vibrating said diaphragm in a direction substantially at right angles to the plane of the central section.

2. A hornless loudspeaker provided with a diaphragm consisting of a sheet of resilient material bent inwardly at opposite ends to form a central section and a pair of end sections, said central section being substantially flat or only slightly curved and of sufficient acoustic area to operate as a loudspeaking membrane, a support to which the edges of said end sections are secured to hold the diaphragm under constant tension, said end sections being of sufficient length to form resilient supporting means for said central section, and a driving element for said central section.

3. In the manufacture of acoustic diaphragms, the improvement which consists in bending the end portions of a resilient diaphragm sheet inwardly toward the central axis of said sheet and holding them in flexed position, so that the diaphragm is in a condition of normal tension, the end portions being of sufficient length to act as a resilient support for the intermediate portion which is held substantially flat or only slightly curved and constitutes the main vibratory area of the diaphragm.

4. An acoustic diaphragm consisting of a substantially rectangular sheet of resilient material having the two end portions bent inwardly toward each other, the central portion of said sheet being at least as wide as the end portions, means for holding said end portions in flexed condition, said end portions being of sufficient length to form a resilient support for said intermediate portion.

5. In an electric acoustic device, a diaphragm consisting of a one-piece sheet of resilient material bent back upon itself at two opposite ends to form a central acoustic section resiliently supported by said ends, means engaging said ends for holding the

sheet in flexed condition under constant tension, said reversely curved end portions being of sufficient area to form auxiliary diaphragms which permit the central section to vibrate with substantially uniform amplitude over its entire area.

6. A loudspeaker comprising a base, a frame fixed on said base, said frame having a pair of substantially parallel bars, a diaphragm consisting of a resilient sheet having opposite end portions bent inwardly and secured to said bars, whereby the central portion of said sheet constitutes an acoustic diaphragm resiliently supported by said ends to vibrate with substantially equal amplitude over its entire surface, and means for operating said diaphragm which is supported in operative position independently of said means.

7. In a loudspeaker, the combination of a base, an upright post on said base, a semi-cylindrical saddle fixed on said post and provided with an inwardly extending flange at one end, the axis of said saddle being substantially horizontal and said flange lying in a substantially vertical plane, a driving unit having a cylindrical casing adapted to be seated in said saddle, removable fastening devices engaging said flange and casing to hold the latter rigidly in the saddle, a frame on said base, and a diaphragm supported by said frame and operated by said unit.

8. A loudspeaking diaphragm consisting of an elastic sheet initially stressed and rigidly supported only at two opposite ends, and means connected approximately to the center of said diaphragm for operating the same.

9. A loudspeaker comprising an elastic sheet supported at two opposite edges and free at the other two edges, the central portion of said sheet being substantially rigid and held resiliently under constant tension, whereby said central portion constitutes a free-edged diaphragm adapted to vibrate with substantially equal amplitude over its entire area, and means operatively associated with said central portion for actuating the same, said central portion being held under tension independently of said actuating means.

10. Sound-producing apparatus comprising a support, a pair of elastic vibratory members secured at one end to said support and extending away from each other in opposite directions, an elastic vibratory sheet connected at two opposite points to the other ends of said members, whereby said sheet is held suspended between said members under tension and constitutes an acoustic diaphragm with a substantially free or floating edge.

11. A loudspeaking diaphragm consisting of a sheet of elastic material supported only at two opposite ends, said sheet curving outwardly from the supported ends for a considerable distance and then curving inwardly, so that in cross-section said sheet is continuously curved in the form of a flat ellipse with a cut-away portion between the supported ends about one-half the length of the major axis of the ellipse.

12. A sound-producing member consisting of a main central diaphragm and a pair of auxiliary end diaphragms, said three diaphragms being formed of a single elastic sheet having two opposite portions so shaped as to constitute auxiliary diaphragms which support the main central diaphragm and permit vibration of the latter with substantially uniform amplitude over its entire area, means for supporting said auxiliary diaphragms to hold the entire sheet constantly under tension, and actuating means connected substantially to the center of the main diaphragm.

13. A loudspeaking diaphragm comprising a stretched flexible sheet held constantly under tension along its surface, and a driving member connected to the center of said diaphragm, the normal tensioned condition of the diaphragm imposing substantially no pull or push load on the driving member.

14. A loudspeaking diaphragm consisting of a single elastic sheet held in permanently curved shape whereby said sheet is always under tension along its vibratory surface, and a driving member associated with the central portion of said sheet.

15. A sound reproducer comprising a membrane, means for holding the same constantly under tension along its vibratory surface, and a driving unit connected to the center of said membrane which is supported under tension independently of said driving unit.

16. A sound reproducer comprising a vibratory membrane, resilient vibratory means for maintaining said membrane under tension in a curved shape, and means associated with the central portion of said membrane for applying sound-reproducing vibrations thereto.

17. A loudspeaking diaphragm comprising a single sheet rigidly supported at the edge and so shaped that the central section of said sheet is always under tension along its vibratory surface, and driving means connected to the center of the diaphragm which is held in tensioned condition independently of said driving means.

18. A loudspeaking diaphragm consisting of a substantially flat tensioned sheet rigidly supported at only two opposite ends which constitute a resilient mounting for the central portion of said sheet, and driving means for said sheet which is held in tensioned condition independently of said driving means.

19. A sound reproducer comprising a supporting frame, a substantially rectangular diaphragm mounted in said frame and maintained under tension in a curved shape, and

a driving unit carried by said frame and connected substantially to the center of said diaphragm, said driving unit including a vibratory member which is substantially free from the normal tension effect of said diaphragm.

20. A loudspeaking diaphragm consisting of a single sheet of duralumin supported at two opposite ends only and held under tension along its vibratory surface.

21. A loudspeaking diaphragm consisting of an elastic sheet initially stressed along its vibratory surface and supported at two opposite ends only, and means acting upon the central portion of said sheet for vibrating the same.

22. A loudspeaking diaphragm consisting of a single elastic sheet rigidly supported at two opposite ends only and held in permanently curved shape along its vibratory surface, whereby said sheet is always under tension, and means acting upon the central portion of said sheet for vibrating the same.

23. A direct-acting diaphragm of loudspeaking area comprising a substantially rectangular sheet of thin flexible metal held permanently in a stretched condition along its vibratory surface.

24. A direct-acting diaphragm of loudspeaking area comprising a substantially rectangular sheet of thin flexible metal supported at two opposite edges only and held permanently stretched along its vibratory surface.

25. A direct-acting diaphragm of loudspeaking area consisting of a single elastic sheet held in permanently curved shape whereby said sheet is always stretched along its vibratory surface.

26. An acoustic diaphragm of loudspeaking area having a length equal to at least twice its width, and means for tensioning said diaphragm in the direction of its length only.

27. An acoustic diaphragm of loudspeaking area comprising a rectangular sheet of duralumin tensioned in the direction of its length only, the length of said sheet being not less than twice its width.

28. A loudspeaking diaphragm consisting of a single elastic sheet rigidly supported at two opposite ends only and held in permanently curved shape, whereby said sheet is always under tension along its vibratory surface.

ADOLPH A. THOMAS.

DISCLAIMER

1,767,777.—*Adolph A. Thomas*, New York, N. Y. LOUD-SPEAKER. Patent dated June 24, 1930. Disclaimer filed May 14, 1932, by the assignee, *Radio Corporation of America.*

Hereby disclaims that part of the specification of said patent which consists of claims 13, 14, 15 and 25 which are in the following words:

"13. A loudspeaking diaphragm comprising a stretched flexible sheet held constantly under tension along its surface, and a driving member connected to the center of said diaphragm, the normal tensioned condition of the diaphragm imposing substantially no pull or push load on the driving member.

"14. A loudspeaking diaphragm consisting of a single elastic sheet held in permanently curved shape whereby said sheet is always under tension along its vibratory surface, and a driving member associated with the central portion of said sheet.

"15. A sound reproducer comprising a membrane, means for holding the same constantly under tension along its vibratory surface, and a driving unit connected to the center of said membrane which is supported under tension independently of said driving unit."

"25. A direct-acting diaphragm of loudspeaking area consisting of a single elastic sheet held in permanently curved shape whereby said sheet is always stretched along its vibratory surface."

[*Official Gazette May 31, 1932.*]

DISCLAIMER

1,767,777.—*Adolph A. Thomas*, New York, N. Y. LOUD-SPEAKER. Patent dated June 24, 1930. Disclaimer filed May 14, 1932, by the assignee, *Radio Corporation of America*.

Hereby disclaims that part of the specification of said patent which consists of claims 13, 14, 15 and 25 which are in the following words:

"13. A loudspeaking diaphragm comprising a stretched flexible sheet held constantly under tension along its surface, and a driving member connected to the center of said diaphragm, the normal tensioned condition of the diaphragm imposing substantially no pull or push load on the driving member.

"14. A loudspeaking diaphragm consisting of a single elastic sheet held in permanently curved shape whereby said sheet is always under tension along its vibratory surface, and a driving member associated with the central portion of said sheet.

"15. A sound reproducer comprising a membrane, means for holding the same constantly under tension along its vibratory surface, and a driving unit connected to the center of said membrane which is supported under tension independently of said driving unit."

"25. A direct-acting diaphragm of loudspeaking area consisting of a single elastic sheet held in permanently curved shape whereby said sheet is always stretched along its vibratory surface."

[*Official Gazette May 31, 1932.*]