May 16, 1967 S. J. HAMLETT 3,319,591

SEWING MACHINE SPEED CONTROL

Filed Aug. 4, 1965

2 Sheets-Sheet 1

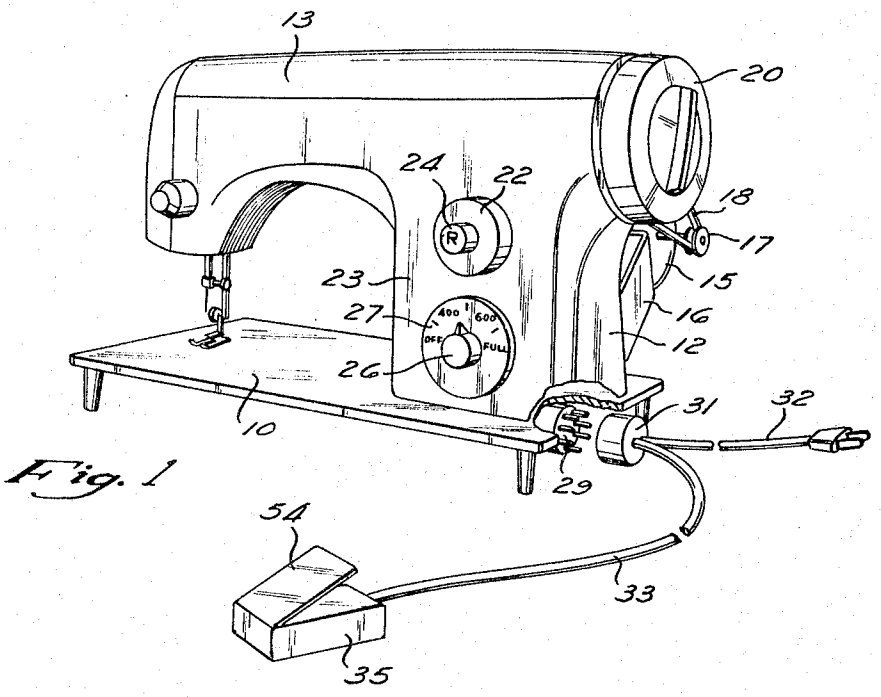

Fig. 1

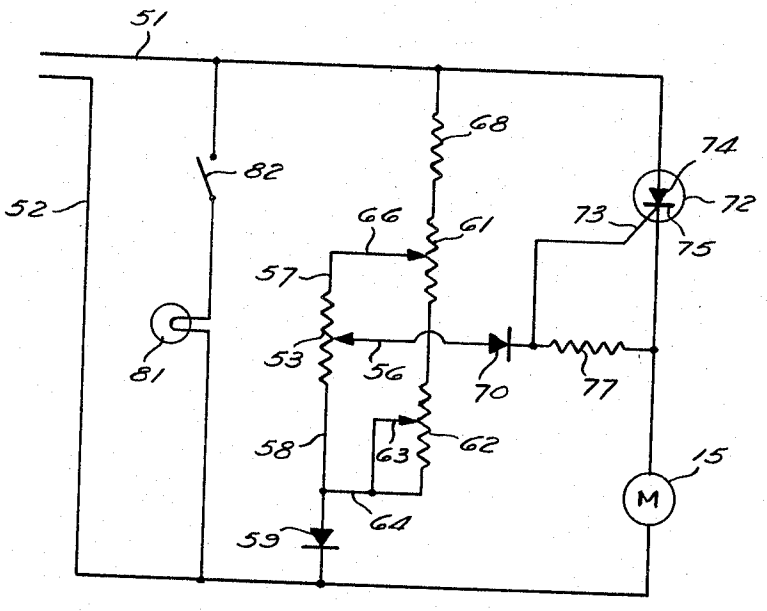

Fig. 2

INVENTOR.
SIDNEY J. HAMLETT
BY
McNENNY, FARRINGTON, PEARNE & GORDON
D.W. Farrington
ATTORNEYS

May 16, 1967 S. J. HAMLETT 3,319,591

SEWING MACHINE SPEED CONTROL

Filed Aug. 4, 1965 2 Sheets-Sheet 2

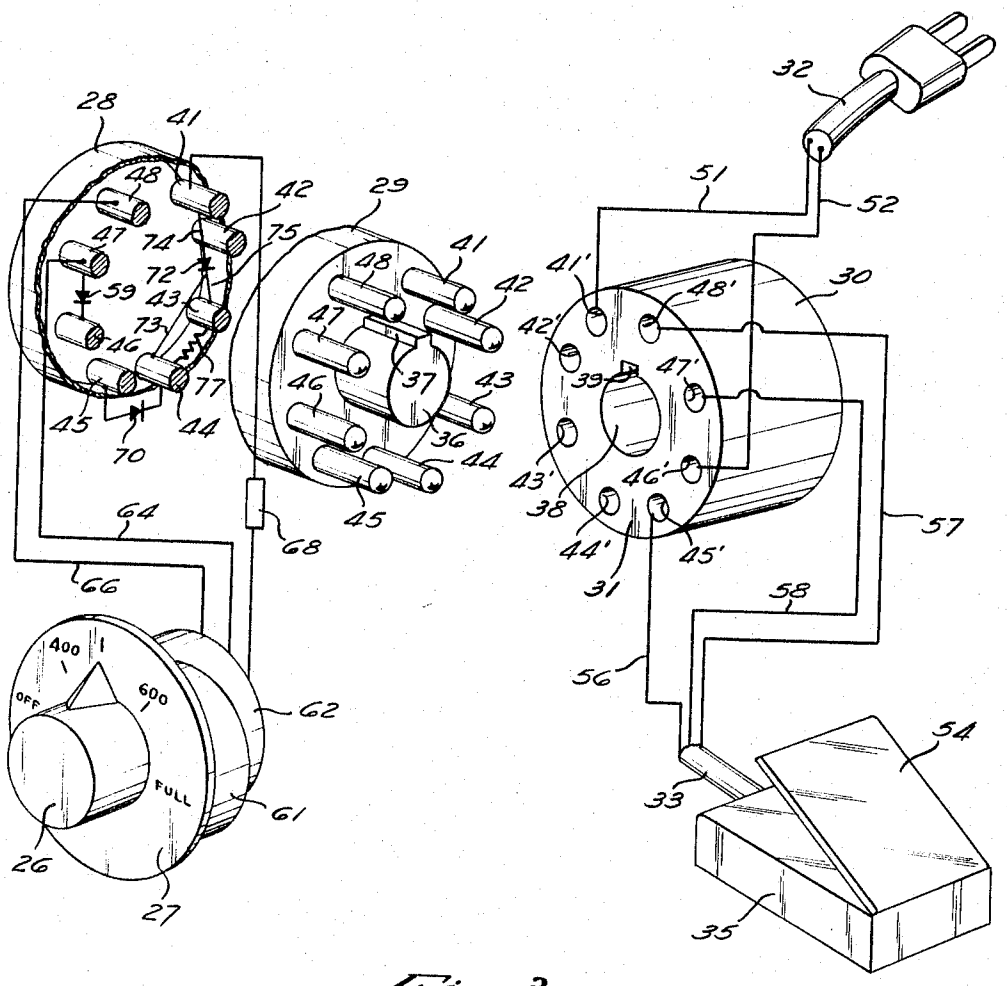

Fig. 3

INVENTOR.
SIDNEY J. HAMLETT

BY
McNENNY, FARRINGTON, PEARNE & GORDON
P. W. Farrington
ATTORNEYS

United States Patent Office 3,319,591
Patented May 16, 1967

3,319,591

SEWING MACHINE SPEED CONTROL

Sidney J. Hamlett, Parma, Ohio, assignor to White Consolidated Industries, Inc., Cleveland, Ohio, a corporation of Delaware

Filed Aug. 4, 1965, Ser. No. 477,095
7 Claims. (Cl. 112—220)

This invention relates generally to sewing machines and more particularly to variable speed electric motor drives for sewing machines.

Household type sewing machines are usually provided with an electric motor drive which is generally usable on ordinary 110 volt, 60 cycle, A.C. lines. Because of the advantages of low cost and durability, as well as the desirable speed and control characteristics, series universal brush type motors have been most commonly used for this purpose. It is customary to provide the user with a variable speed control so that the sewing machine may be arranged to run at any speed up to a maximum. Because it is possible to sew at rather high speeds in straight forward stitching through lightweight material, the maximum speed of a sewing machine is generally chosen with this in mind. However, many sewing applications require the use of zigzag stitches or sewing in curved lines which requires moving the material in other than a straight line feed. When sewing in this manner or in sewing through heavy material, it is preferable to allow the operator to use the sewing machine at a cyclic speed much lower than the maximum speed. However, the torque and speed characteristics of the universal motor cause the torque to be reduced under low speed conditions so that if the applied load is high, such as when sewing through several layers of heavy fabric, the tendency is for the motor to stall or resist starting so that after it breaks free it runs at too fast a speed. Thus, such motors tend to have insufficient torque for low speed requirements, and it has generally been necessary to put a motor of higher torque and power capacity on the sewing machine than would be necessary for full speed operation in order to get the necessary torque to operate the sewing machine under low speed conditions. However, the use of such a larger motor still does not overcome the overspeed problem when the load is removed nor does it allow for uniform speed under changing load conditions as may occur when the fabric thickness changes.

It has been proposed to use various electronic controls for regulating the speed of sewing machine motors, but such controls have heretofore found little application and are generally unsuited for use with household type sewing machines since they are bulky and require special mounting and service and greatly increase the cost of such machines. However, there has recently been made available solid state controlled rectifiers, generally using a semiconductor material such as silicon and commonly known as silicon controlled rectifiers. It has been proposed that these devices be used for variable speed controls for series universal motors to take advantage of the fact that circuits utilizing a silicon controlled rectifier may be used to allow variable speed operation of the motor.

Although the use of such a controlled rectifier would appear to be merely a substitute for a varible resistor in series with the series universal motor, as has long been used for the speed control for sewing machines, it has been discovered in accordance with the present invention that a silicon controlled rectifier can be used for controlling the speed of a sewing machine over a wide speed range while accomplishing new and unexpected results in the operation of the sewing machine. Because the controlled rectifier may be controlled by only a small amount of current, the manual control need have a current capacity substantially less than that flowing through the motor allowing the use of lower cost and smaller components. In addition, the nature of the operation of a silicon controlled rectifier is such that it tends to be self-regulating as to speed in that it automatically adjusts to a change in the torque requirements of the motor at a given speed without changing the speed of the motor.

Another feature of the present invention is that it allows the use of a maximum speed limiting control which operates in conjunction with the usual operator's speed controller so that the maximum speed limiting control can be adjusted to a predetermined maximum and then the standard operator controller will then control the speed of the sewing machine to any speed up to the maximum determined by the maximum speed control.

Another feature of the control of this invention is that when the motor is operated at low speed, the necessary current requires conduction only over a small portion of the cycle. Since the nature of the motor circuit is such that it provides little filtering action, the current supply to the motor is thus a series of pulses so that the motor rather than tending to operate smoothly begins to rotate in a series of pulses. It has been found that this pulsating action of the motor provides a precise control at low speeds because it tends to eliminate the effect of high static coefficient of friction in the operation of the sewing machine which tends to require a high torque to start the machine rotating after which the much lower running coefficient of friction causes the machine to speed up. Furthermore, such pulsating action aids in causing utile penetration through the heavy fabrics as compared to a steadily applied force and thus the machine gives vastly improved operation at extremely slow speed.

Still another feature of the present invention is that the components of the electrical circuit have little power consumption and may be made relatively small in size so as to allow easily concealed mounting within the machine in spaces already available and therefore do not require an expensive redesign of existing machines in order to accommodate the extra circuitry and components of the control of this invention.

Further objects and advantages of this invention will readily become apparent to those skilled upon a more complete understanding of the preferred embodiment of the invention which is described in the following detailed description and shown in the accompanying drawings in which:

FIGURE 1 is a perspective view with parts broken away of a sewing machine incorporating the preferred embodiment of the present invention;

FIGURE 2 is a schematic electrical circuit of the sewing machine motor control; and

FIGURE 3 is a fragmentary figure, partially schematic, showing the physical arrangement of the components of the sewing machine control of FIGURES 1 and 2.

As shown in FIGURE 1, the sewing machine is of the usual type having base means including a base plate **10** from the right hand side of which rises a standard **12** from which extends horizontally the arm **13**. The sewing machine drive motor **15** is of the series universal brush type and is mounted on a bracket **16** on the backside of the standard **12**. The motor has a drive pulley **17** for a belt **18** whose other end is connected to the drive shaft means of the machine. The drive shaft means includes a larger driven pulley to give the necessary speed reduction and torque increase required to drive the sewing machine. It will be understood that the mechanism of the sewing machine driven by the driven pulley **20** is of the usual type and will not be described since it forms no part of the present invention.

A stitch length control **22** is mounted on the front face

23 of the standard 12 and in its center has a reverse push button 24. Directly below the stitch length control 22 is the maximum speed control knob 26 which may be rotated to select the maximum cyclic speed of the machine as indicated on the dial 27.

The electrical circuitry includes a male socket 29 mounted on the machine beneath the base plate 10 and containing the various circuit components and wiring to make the necessary connections to the remainder of the control as shown in greater detail in FIGURE 3. Mating with the socket 29 is the female plug 31 from which extends the line cord 32 adapted to be plugged into an ordinary wall socket to provide the necessary power supply for the sewing machine. Also, extending from the plug 31 is a control line 33 which extends to the manual speed controller 35. This controller may be of the foot or knee actuated type and is the control used by the operator to start and control the speed of the motor and the sewing machine up to the maximum determined by the setting of the knob 26.

The socket 29 and the plug 31 have a construction of the octal type commonly used for the electron tubes. To prevent any possible exposure of live terminals, the male portion is made the socket and the female portion acts as a plug in the present arrangement. In accordance with the octal construction, the socket 29 has an axially projecting post 36 from which projects the longitudinal key 37. Correspondingly, the plug 31 has an axial bore 38 and a keyway 39 to insure proper indexing and positive alignment between the plug and socket when they are connected together. The pins of the socket 29 are numbered in the usual fashion, clockwise from the key 37 and identified by the reference numerals 41 through 48. The plug 31 has corresponding recesses 41′ through 48′ each having appropriate electrical connectors to make connection with the pins 41 through 48.

It will be understood from FIGURE 3 that the connecting lines of the power cord 32 and the control line 33 are made in the usual manner to the connectors of the indicated recesses and that both of these lines emerge from a cover 30 on the rear face of the plug 31 acting as a shield for the exposed connectors. Likewise, various circuit elements as described hereafter are mounted on the rear face of the socket 29 and may be connected between the connector ends of the pins in the manner indicated schematically in FIGURE 3. It will be understood that the circuit elements indicated in FIGURE 3 will be connected directly to the pins and will be covered by a suitable shielding cover 28, and at the socket 29 will be mounted in a suitable fashion beneath the base plate 10.

The line cord 32 is preferably arranged for connection to ordinary 110 or 120 volt 60 cycle alternating current and the two lines 51 and 52 of cord 32 are connected to connectors 41′ and 46′ of the plug 31. Hereafter, when referring to the connections of the components, the term high side refers to the side adjacent line 51 and low side refers to the side adjacent line 52. The speed controller 35 is in the form of a potentiometer 53 and the controller has a movable member 54 adapted to shift the position of the slide of the potentiometer center tap. The potentiometer tap is connected by line 56 to the connector 45′, while the high side is connected by line 57 to the plug connector 48′. The other side of potentiometer 53 is connected by line 58 to the connector 47′ which in turn makes connection to the socket pin 47. A diode 59 is connected between the pins 47 and 46, and hence to the supply line 52.

The maximum speed control includes a potentiometer 61 having a center tap adjustably controlled by rotation of the knob 26. As shown, this potentiometer 61 is mounted within the standard 12, and mounted along side it is a trimmer potentiometer 62 which is designed to be set when the sewing machine is assembled and not adjusted by the operator, so that it has no external means for adjustment. However, the maximum speed control may also be mounted in other locations, such as on the sewing machine cabinet or on the operator controller depending upon the convenience to the user. The trimmer potentiometer 62 has the center tap 63 connected to one side to act as a variable resistance and is used to adjust the maximum motor speed obtained at the lowest setting of the maximum speed control potentiometer 61. The connection between the potentiometers 61 and 62 are made directly as shown in FIGURE 2 and therefore are not shown in the diagram of FIGURE 3. The center tap 63 of the trimmer potentiometer 62 is connected directly to the low side and hence by the line 64 to the pin 47. The other side of the trimmer potentiometer 62 is connected to the low side of the maximum speed potentiometer 61 whose center tap at 66 is connected to the pin 48 where it makes contact with the line 57 leading to the controller potentiometer 53. The other side of the maximum speed potentiometer 61 is connected by a load resistor 68 to the pin 41 which in turn is connected to the supply line 51.

As previously stated, the center tap 56 of the control potentiometer 53 is connected through the plug and socket to pin 45 and this pin in turn is connected through a diode 70 to pin 44. The silicon controlled rectifier is indicated at 72 and has its gate 73 connected to the pin 44. The anode 74 of the silicon controlled rectifier is connected to pin 41 and hence to supply line 51. The cathode 75 is connected to the pin 43 which in turn is connected by a resistor 77 to the pin 44. It will be understood that the diodes 59 and 70, the resistor 77 and the silicon controlled rectifier 72 are all mounted directly on the rear face of the socket 29, while the load resistor 68, being of a higher wattage, may be exposed to air for cooling directly on the line between the maximum speed controller and the socket within the standard 12.

The sewing machine motor, shown at 15 in FIGURE 2, is of the series universal brush type with the field and armature connected directly together within the motor. One side of this motor is then connected to the pin 43 and hence to the cathode 75 of the silicon controlled rectifier, while the other side of the motor is connected to pin 46 and hence directly to the supply line 52.

If desired, the usual sewing machine light 81 and its accompanying switch 82 may be connected directly across the supply line 51 and 52 by means of connection to the pins 41 and 46. However, the presence or the absence of the light does not change the operation of the motor control circuit.

The silicon controlled rectifier is connected directly in series with the sewing machine motor so that the rectifier acts as a half wave device and under such conditions will conduct all the current passing through the armature and field of the series wound motor. It will be seen that if the conduction time of the control rectifier may be controlled to determine the point in the cycle in which conduction will start, the total amount of current flowing through the motor can be controlled. This is accomplished by means of the voltage divider network formed by the resistances 53, 61 and 68. Depending upon the setting of the tap 56, a voltage will be applied through the diode 70 to the gate 73 and will start conduction in the controlled rectifier depending upon the relationship between the voltage at the gate and the voltage at the controlled rectifier. Since the voltage at the latter depends upon the counter E.M.F. in the motor 15, the circuit tends to be self-stabilizing so that the speed is regulated. If a load is applied to the motor, the speed decreases due to the increasing torque requirement, and this tends to decrease the counter E.M.F. so that with the same adjustment of the speed controls, the controlled rectifier will start conduction earlier in the cycle to supply additional torque to compensate for the increased load and maintain the set speed. Since the position of the center tap 56 is

determined by the operator, the speed of the sewing machine may be fully and easily controlled over the full speed range.

In addition, the setting of the maximum speed potentiometer **61** determines the maximum speed obtainable by the operator's controller **35** by controlling the maximum gate voltage obtainable at the maximum setting of the operator's controller. The use of the trimming resistor **62** determines the maximum motor speed allowable when the operator's controller is in the maximum position and maximum speed control is set at the minimum speed position for calibration purposes.

It will be noticed that since the operator's controller has a fixed range, and this range extends from zero speed to the maximum speed determined by the maximum speed controller, a much finer range of control can be obtained by the operator by having the maximum speed control set at less than the maximum sewing machine speed, since under such conditions more physical movement of the movable member **54** is required for a given change in speed. Thus, the maximum speed control allows a higher degree of precision control than would otherwise be possible.

Of course, when a machine is turned at low speed, the controlled rectifier will be conducting only over a small portion of the cycle so that the current supplied to the motor will appear as a number of sharp pulses. The effect of these pulses is to create individual torque pulses by the motor, and the nature of these short but intense torque pulses is such as to substantially eliminate the problems created by the relatively high static friction that may exist in the sewing machine mechanism, while not constituting sufficient averaged torque to cause the sewing machine to run at a higher speed than desired. The result is that a sewing machine having a motor no more powerful than that previously used with the prior art series resistance controls is capable of running at slower speeds than has heretofore beeen possible without the danger of stalling if an unexpected resistance is encountered by the machine.

In the preferred embodiment of this invention, the sewing machine motor used is designed to a voltage rating of between .75 and .90 of the voltage of the alternating current source. In one embodiment a motor is used with a rating of 87 volts, when the supply to the line cord is 110 or 120 volts since the maximum voltage supplied to the controlled rectifier is less than would be encountered with full wave alternating current. The motor is designed to have a nominal input power of about one hundred watts and an output in the range of 1/16 horsepower. In such case, the following components have been employed in the circuit:

Resistor **68**—4,000 ohms, 5 watts
Resistor **77**—220 ohms, ½ watt
Potentiometer **53**—500 ohms, 2 watts
Potentiometer **61**—300 ohms, 2 watts
Potentiometer **62**—500 ohms, 2 watts
Diodes **59** and **70**—General Electric IN1693
Controlled rectifier **72**—General Electric C22B

The reduction between the motor pulley **17** and the driven pulley **20** is a speed reduction of approximately 5:1 and it has been found that for practical operation of the sewing machine, the maximum speed obtainable should be limited to 1,200 r.p.m., so that the maximum motor speed is 6,000 r.p.m. Thus, the maximum speed control may be set to provide a maximum speed, when the operator's control is set to a maximum, over a range varying between about 200 r.p.m. to the full speed of 1,200 r.p.m.

It is to be understood that the foregoing description of the preferred embodiment of this invention is not intended to be limiting or restricting and that various rearrangements and modifications which may become apparent to those skilled in the art may be resorted to without departing from the scope of the invention as defined in the claims.

What is claimed is:

1. A sewing machine having base means including a frame, a stitch producing mechanism on said frame, drive shaft means on said frame to drive said stitching mechanism, an electric motor carried by said frame to rotatably drive said drive shaft, said electric motor being of the series commutator type, a source of alternating current having a pair of conductor lines, means connecting one of said lines to one side of said electric motor, a solid state controlled rectifier connected between the other side of said electric motor and the other of said lines, control means for controlling the conduction of said controlled rectifier, said control means including a first manually operable control having a control member remote from said frame movable by an operator's lower limb to control the conducting period of said controlled rectifier and the speed of said electric motor, a second manually operable control on said base means in a position accessible to an operator, said second control cooperating with said first control to control the maximum conducting period of said controlled rectifier and hence determine the maximum speed of said electric motor obtainable by said first manually operable control, and a trimmer connected to cooperate with said manually operable controls to determine the minimum conducting period of said controlled rectifier and hence determine the minimum speed of said electric motor obtainable by said manually operable controls, said first control being operable through substantially its full range of movement in all positions of adjustment of said second control whereby the sensitivity of said first control is increased as the maximum speed of said motor is decreased by said second control.

2. A sewing machine as set forth in claim **1** wherein said motor has a rating between .75 and .90 of the voltage of said source of alternating current.

3. A sewing machine as set forth in claim **2** wherein said controlled rectifier is retained in series with said motor under all conditions of operation of said sewing machine.

4. A sewing machine comprising a frame, stitch producing mechanism on said frame, drive shaft means on said frame to drive said stitching mechanism, an electric driving motor carried by said frame to rotatably drive said drive shaft, said electric motor being of the series commutator type, an electrical connector socket mounted on said frame, a plug engagable with said socket, a pair of conductor lines connected at one end to said plug and at the other end being adapted to be connected to a source of alternating current, a first manually variable potentiometer control remote from said frame having a movable member movable by an operator's lower limbs to vary the speed of the sewing machine, means connecting said first potentiometer to said plug, circuit means mounted on said socket for controlling the speed of said electric motor, said circuit means including a solid state controlled rectifier connected in series with said motor, said circuit means also including a voltage dividing means for controlling the conduction of said controlled rectifier, said voltage dividing means being interconnected with and including said first manually operable potentiometer, whereby said first manually operable potentiometer is arranged to control the conducting period of said controlled rectifier and the speed of said electric motor, said voltage dividing means also including a second manually operable potentiometer control mounted on an accessible face of said frame cooperating with said first manually operable potentiometer to control the maximum conducting period of said controlled rectifier and hence determine the maximum speed of said electric motor obtainable by said first manually operable potentiometer, said first control being operable through substantially its full range of movement in all positions of adjustment of said second control whereby the sensitivity of said first control is increased as the

maximum speed of said motor is decreased by said second control.

5. A sewing machine comprising a frame including a base and a standard having a front face, stitch producing mechanism on said frame, drive shaft means on said frame to drive said stitching mechanism, an electric driving motor carried by said frame to rotatably drive said drive shaft, said electric motor being of the series commutator type, a pair of conductor lines having one end adapted to be connected to a source of alternating current, a first manually variable portentiometer control remote from said frame having a movable member movable by an operator's lower limb to vary the speed of the sewing machine, circuit means mounted on said frame for controlling the speed of said electric motor, said circuit means including a solid state controlled rectifier connected in series with said motor, said circuit means also including a voltage dividing means for controlling the conduction of said controlled rectifier, said voltage dividing means being interconnected with and including said first manually operable potentiometer, whereby said first manually operable potentiometer is arranged to control the conducting period of said controlled rectifier and the speed of said electric motor, said voltage dividing means also including a second manually operable potentiometer control mounted on the front face of said standard cooperating with said first manually operable potentiometer to control the maximum conducting period of said controlled rectifier and hence determine the maximum speed of said electric motor obtainable by said first manually operable potentiometer, said first control being operable through substantially its full range of movement in all positions of adjustment of said second control whereby the sensitivity of said first control is increased as the maximum speed of said motor is decreased by said second control.

6. A sewing machine comprising a frame including a base and a standard having a front face, stitch producing mechanism on said frame, drive shaft means on said frame to drive said stitching mechanism, an electric driving motor carried by said frame to rotatably drive said drive shaft, said electric motor being of the series commutator type, an electrical connector socket mounted on said frame, a plug engageable with said socket, a pair of conductor lines connected at one end to said plug and at the other end being adapted to be connected to a source of alternating current, a first manually variable potentiometer control remote from said frame having a movable member movable by an operator's lower limb to vary the speed of the sewing machine, means connecting said first potentiometer to said plug, circuit means for controlling the speed of said electric motor, said circuit means including a solid state controlled rectifier connected in series with said motor, said circuit means also including a voltage dividing means for controlling the conduction of said controlled rectifier, said voltage dividing means being interconnected with and including said first manually operable potentiometer, whereby said first manually operable potentiometer is arranged to control the conducting period of said controlled rectifier and the speed of said electric motor, said voltage dividing means also including a second manually operable potentiometer control mounted on an accessible face of said frame cooperating with said first manually operable potentiometer to control the maximum conducting period of said controlled rectifier and hence determine the maximum speed of said electric motor obtainable by said first manually operable potentiometer said first control being operable through substantially its full range of movement in all positions of adjustment of said second control whereby the sensitivity of said first control is increased as the maximum speed of said motor is decreased by said second control.

7. A sewing machine comprising a frame including a base and a standard having a front face, stitch producing mechanism on said frame, drive shaft means on said frame to drive said stitching mechanism, an electric driving motor carried by said frame to rotatably drive said drive shaft, said electric motor being of the series commutator type, an electrical connector socket mounted on said frame, a plug engageable with said socket, a pair of conductor lines connected at one end to said plug and at the other end being adapted to be connected to a source of alternating current, a first manually variable potentiometer control remote from said frame having a movable member movable by an operator's lower limb to vary the speed of the sewing machine, means connecting said first potentiometer to said plug, circuit means mounted on said socket for controlling the speed of said electric motor, said circuit means including a solid state controlled rectifier having an anode and cathode connected in series with said motor and a gate, said circuit means also including a voltage dividing means connected across said lines and to said gate for controlling the conduction of said controlled rectifier, said voltage dividing means being interconnected with and including said first manually operable potentiometer, whereby said first manually operable potentiometer is arranged to control the conducting period of said controlled rectifier and the speed of said electric motor, said voltage dividing means also including a second manually operable potentiometer control mounted on the front face of said standard interconnected with said first manually operable potentiometer to control the maximum conducting period of said controlled rectifier and hence determine the maximum speed of said electric motor obtainable by said first manually operable potentiometer, said first control being operable through substantially its full range of movement in all positions of adjustment of said second control whereby the sensitivity of said first control is increased as the maximum speed of said motor is decreased by said second control.

References Cited by the Examiner

UNITED STATES PATENTS

3,089,071	5/1963	Hartwig	320—2
3,141,429	7/1964	Momberg et al.	112—220
3,209,228	9/1965	Gawron	318—345
3,222,583	12/1965	Gutzwiller	318—246

OTHER REFERENCES

Gutzwiller: "A Plug-In Speed Control for Standard Portable Tools and Appliances," G.E. Application Note 201.1, January 1962.

JORDAN FRANKLIN, *Primary Examiner.*

H. H. HUNTER, *Assistant Examiner,*

UNITED STATES PATENT OFFICE

CERTIFICATE OF CORRECTION

Patent No. 3,319,591 May 16, 1967

Sidney J. Hamlett

It is hereby certified that error appears in the above numbered patent requiring correction and that the said Letters Patent should read as corrected below.

Column 8, lines 7 and 8, strike out "as the maximum speed of said motor is decreased".

Signed and sealed this 21st day of November 1967.

(SEAL)
Attest:

Edward M. Fletcher, Jr.
Attesting Officer

EDWARD J. BRENNER
Commissioner of Patents