Sept. 18, 1934. A. D. EITZEN 1,974,153

TAKE-UP DEVICE FOR STOCK QUOTATION PROJECTING MACHINES

Original Filed Oct. 26, 1929 2 Sheets-Sheet 1

Fig. 1

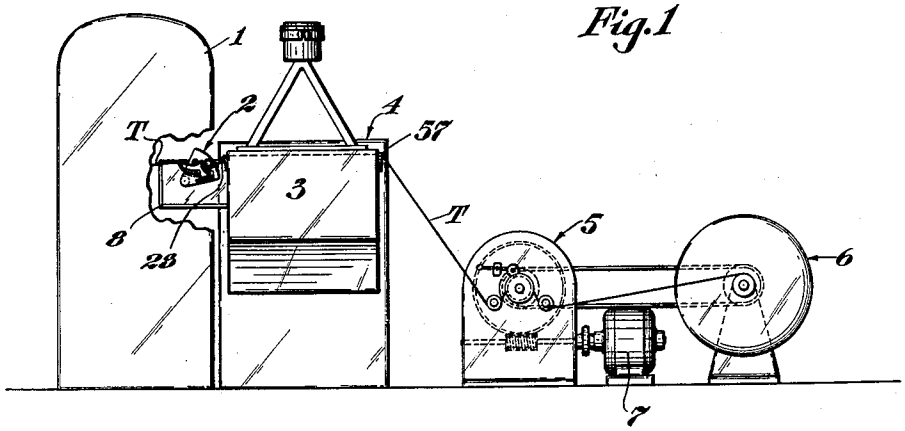


Fig. 2

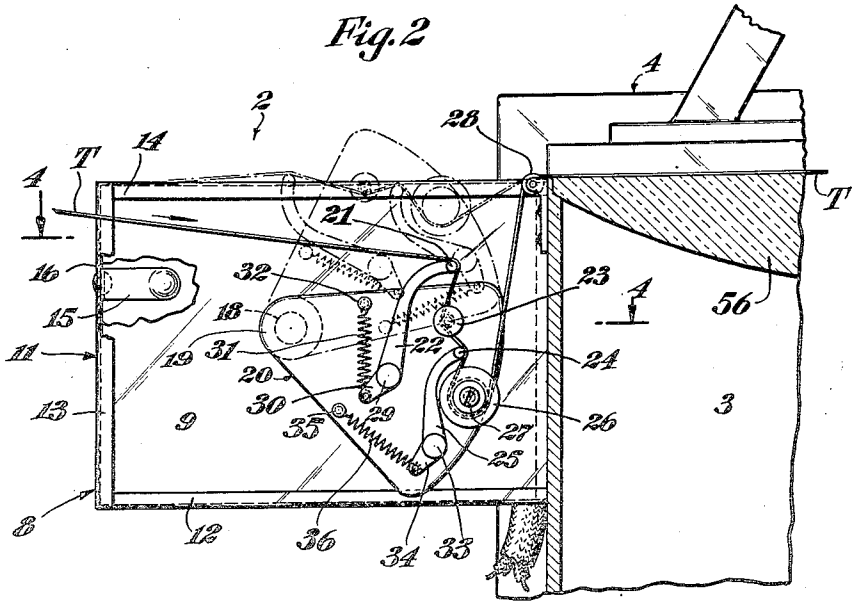


INVENTOR
August D. Eitzen,
BY Gustav Drews
ATTORNEY

Sept. 18, 1934. A. D. EITZEN 1,974,153

TAKE-UP DEVICE FOR STOCK QUOTATION PROJECTING MACHINES

Original Filed Oct. 26, 1929 2 Sheets-Sheet 2

Fig. 3

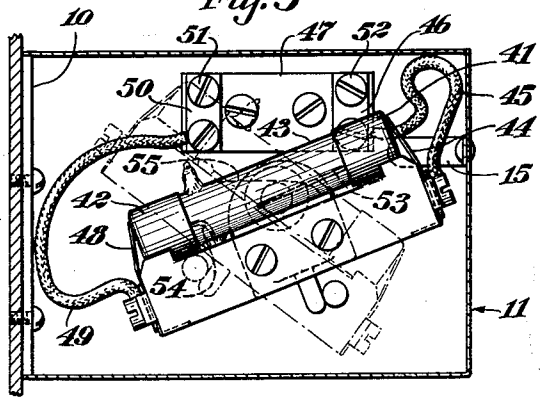


Fig. 4

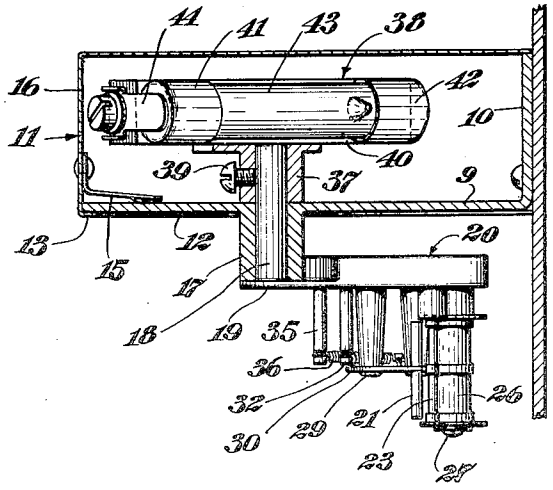


INVENTOR
August D. Eitzen,
BY Gustav Drews
ATTORNEY

Patented Sept. 18, 1934 1,974,153

# UNITED STATES PATENT OFFICE

1,974,153

## TAKE-UP DEVICE FOR STOCK QUOTATION PROJECTING MACHINES

August D. Eitzen, Rockville Center, N. Y., assignor to News Projection Corporation, New York, N. Y., a corporation of New York

Application October 26, 1929, Serial No. 402,597
Renewed February 17, 1934

14 Claims. (Cl. 271—2.3)

This invention relates to stock quotation projecting machines in general and more especially to take-up devices for dissipating the vibrations transmitted to the tape.

Among the objects of the present invention it is aimed to provide an improved device for dissipating the vibrations transmitted to the tape by the ticker during the starting and stopping action so that the tape will remain smooth at the light aperture and thus ensure smooth projection not only when the tape is moving but also when the tape starts moving, when it comes to rest and when it is at rest.

In practice it has been found that while the ticker transmits vibrations to the tape when ejecting the same, vibrations will also be transmitted to the tape when the tape puller controlling means operates preparatory to initiating the actuation of the tape puller to start the movement of the tape, and again when this tape puller controlling means operates to initiate the actuation of the tape puller to come to rest in turn to cause the movement of the tape to come to rest. This is especially so when the tape puller controlling means includes an electric switch arm which rests on the tape between the ticker and the projecting machine. Heretofore various means have been provided in an attempt to eliminate the vibration caused by the tape puller controlling means, most of which, however, resort to friction creating devices. To this end, the present invention aims to provide an improved tape puller controlling means which will automatically take up the slack when the ticker comes to rest and after the circuit of the tape puller has been broken.

These and other features, capabilities and advantages of the invention will appear from the subjoined detail description of one specific embodiment thereof illustrated in the accompanying drawings in which

Figure 1 is a side elevation of a stock quotation projecting machine equipped with the present invention;

Fig. 2 is an enlarged elevation of the improved tape puller controlling means showing a part of the lamp housing in section;

Fig. 3 is a rear view of the improved tape puller controlling means; and

Fig. 4 is a section on the line 4—4 of Fig. 2.

In the embodiment illustrated, the tape T issues from the ticker generally designated 1 to the improved tape puller controlling means 2 and from there across the extension 3 of the projecting machine 4 down to the tape puller 5 and from the tape puller 5 to the rewind device 6. The tape puller 5 is operatively connected to be driven by the electric motor 7, the circuit of which is controlled by the switch of the tape puller controlling means 2 now to be described.

In the present instance, the tape puller controlling means 2 is mounted in the housing 8 which is secured to the side of the extension 3 of the projecting machine 4 located between the ticker 1 and the projecting machine 4. The housing 8 consists essentially of a plate 9 having an offset 10 which is secured to the side of the extension 3, and a cover 11 which is provided with flanges 12, 13 and 14 to engage the outer face of the plate 9, and a spring finger 15 which extends from the end wall 16 of the cover 11 and engages the inner face of the plate 9, see Fig. 4. By cooperation of the finger 15 and flanges 12, 13 and 14 of the plate 9, the cover is frictionally maintained in place on the plate 9 and can with facility be removed when access is desired to the side of the housing 8 thus formed.

On the plate 9 and extending downwardly therefrom, there is formed the journal 17. Supported in the journal 17 there is provided the shaft 18 secured to the corner 19 of the oscillating bracket 20. On the outer face of the bracket 20 are provided tape engaging elements now to be described.

As the tape T issues from the ticker 1, it first passes over the cross piece 21 of the lever 22, then under the rod 23 extending outwardly from the bracket 20, and then over the cross piece 24 of the lever 25 and then under the tape engaging finger comprising in the present instance, roller 26 rotatably mounted on the pin 27 extending outwardly from the bracket 20. From the roller 26, the tape T passes up to and over the roller 28 formed on the entrance edge of the extension 3. The lever 22 is pivotally mounted on the pin 29 extending outwardly from the bracket 20 and has a short arm 30 to which is connected the spring 31 which extends to the abutment 32 extending outwardly from the bracket 20. The lever 25 is pivotally mounted on the pin 33 and is provided with a short arm 34 which is connected to the abutment 35 extending from the bracket 20 by the spring 36.

The shaft 18, after passing through the journal 17, projects inwardly of the plate 9 and there is secured in the boss 37 of the mercury switch 38 by means of the set screw 39. The boss 37 extends outwardly from the bakelite or

insulated plate 40 which connects the caps 41 and 42 supporting the glass container 43 of the mercury. The glass container 43 is provided with a terminal 44 which is connected by the conductor 45 to the bus bar 46 of the junction block 47. The other end of the glass container 43 is provided with a terminal 48 which is connected by the conductor 49 to the bus bar 50 of the junction block 47.

The junction block 47 is provided with two binding posts 51 and 52 for conductors not shown which extend to the motor 7 and source of current in the usual way. The terminal 44 through the cap 41 is connected to the contact pin 53 disposed in the glass container 43. The terminal 48 through the cap 42 is connected to the contact pin 54 disposed in the glass container 43.

In the usual way, the mercury indicated by the level 55 connects the contact pins 53 and 54 with one another when the glass tube 43 is tilted in the position indicated in full lines in Fig. 3. When the glass tube 43 is tilted into the dot and dash line indicated in Fig. 3, the mercury will flow toward the cap 41 and clear the contact pin 54 so that the connection between the contact pins 53 and 54 will be broken. In other words, when the bracket 20 is tilted into the full line position indicated in Fig. 2, when the glass tube 43 will be tilted into the full line position indicated in Fig. 3, the circuit for the motor 7 will be established to cause the same to operate, and in turn actuate the tape puller 5 to draw the tape T across the projecting machine. This tilted position of the bracket 20 will only occur when the ticker is ejected for the tape T to form sufficient slack to permit the bracket 20 to drop to the position indicated in Fig. 2. As soon as the ticker stops operating, when the motor 7 will still be operating, it will continue to operate until the bracket 20 has been tilted up into the position indicated in the dash and dot line position of Fig. 2 when the current will be broken.

In the meantime, the tension in the tape T will cooperate with the cross piece 21, rod 23, cross piece 24 and roller 26 against the tension of the springs 31 and 36 to tilt the levers 22 and 25 into the dash and dot line position indicated in Fig. 2. As the slack is formed, it will be gradually taken up by the levers 22 and 25 through the tension of the springs 31 and 36 while the bracket 20 is dropping into the full line position indicated in Fig. 2 so that the electrical circuit for the motor 7 will be effectively established and the motor 7 started to operate long before the bracket 20 drops to the full line position indicated in Fig. 2.

As a result of the foregoing, the bracket 20 will be compelled to move down slowly, thus to prevent any sudden jars being transmitted to the tape T and at the same time no free loop or free slack formed in the tape T between the ticker 1 and projecting machine 4 before the tape puller 5 has started to operate. After the tape puller 5 has started to operate sufficiently, there will not be any free slack formed immediately preceding the projecting machine 4 so that at no time can any of the vibrations transmitted to the tape T by the ticker 1 pass on to the portion of the tape T located on the extension 3 of the projecting machine 4.

After the tape T passes across the lens 56 of the extension 3, it will pass over the roller 57 before passing down to the tape puller 5. Due to the fact that the tape T is at no time being impinged by two opposing surfaces while passing through the projecting machine, the likelihood of adhesion is entirely eliminated. Heretofore, when cellophane tape has been used and it passes between two impinging surfaces, especially in humid and hot weather, the tape will frequently adhere to these impinging surfaces long enough to disturb the normal smooth operation of the tape through the projecting machine. Frequently when the adhesion is broken, the jar is so sudden as to cause vibrations to be transmitted to the tape disposed on the lens 56 and would thus be depicted on the screen when the images were projected.

It is obvious that various changes and modifications may be made to the details of construction without departing from the general spirit of the invention as set forth in the appended claims.

I claim:

1. In a stock quotation projecting machine, the combination with a tape puller for drawing the tape through the projecting machine as it is fed thereto, of an electric motor operatively connected to actuate said tape puller, controlling means including an electric switch arm resting on the tape in advance of the projecting machine, the tape permitting the arm to descend to close a switch and cause said motor to operate when the tape is fed to the projecting machine, and a lever cooperating with the tape to take up the slack in the tape as it is formed adjacent to said switch arm, said switch arm and lever being pivotally mounted about a common axis.

2. In a stock quotation projecting machine, the combination with a tape puller for drawing the tape through the projecting machine as it is fed thereto, of an electric motor operatively connected to actuate said tape puller, controlling means including an electric switch arm resting on the tape in advance of the projecting machine, the tape permitting the arm to descend to close a switch and cause said motor to operate when the tape is fed to the projecting machine, and a plurality of levers for successively taking up the slack as it is formed in the tape adjacent to said switch arm.

3. In a stock quotation projecting machine, the combination with a tape puller for drawing the tape through the projecting machine as it is fed thereto, of an electric motor operatively connected to actuate said tape puller, controlling means including an electric switch arm resting on the tape in advance of the projecting machine, the tape permitting the arm to descend to close a switch and cause said motor to operate when the tape is fed to the projecting machine, a finger associated with said switch arm for engaging the upper surface of the tape, and two levers for engaging the lower surface of said tape cooperating with said switch arm and finger to take up the slack as it is formed.

4. In a stock quotation projecting machine, the combination with a tape puller for drawing the tape through the projecting machine as it is fed thereto, of an electric motor operatively connected to actuate said tape puller, controlling means including an electric switch having an electric switch arm resting on the tape in advance of the projecting machine, the tape permitting the arm to descend to close said switch and cause said motor to operate when the tape is fed to the projecting machine, a

finger associated with said switch arm and adapted to engage the upper surface of the tape, and two spring pressed levers to engage the lower surface of the tape and cooperate with said finger and said switch arm to take up the slack as it is formed.

5. In a stock quotation projecting machine, the combination with a tape puller for drawing the tape through the projecting machine as it is fed thereto, of an electric motor operatively connected to actuate said tape puller, controlling means including an electric switch having an arm resting on the tape in advance of the projecting machine, the tape permitting the arm to descend to close said switch and cause said motor to operate where the tape is fed to the projecting machine, a finger associated with said switch arm and adapted to engage the upper surface of the tape, a spring pressed lever engaging the lower surface of the tape between the ticker and said finger, and a second spring pressed lever engaging the lower surface of the tape in advance of said switch arm to take up the slack as it is being formed.

6. In a stock quotation projecting machine, the combination with a tape pulling roller for pulling the tape through said projecting machine as it is fed thereto, of an electric motor for actuating said tape puller, motor control means including an electric switch arm adapted to descend to close the circuit for said motor when the tape is fed to the projecting machine, a bracket fixed to rock with said switch arm, a finger on said bracket resting on said tape in advance of said projecting machine, a lever pivotally mounted on said bracket in advance of said finger, and a spring urging said lever to engage the lower surface of said tape to take up the slack in advance of said finger.

7. In a stock quotation projecting machine, the combination with a tape pulling roller for pulling the tape through said projecting machine as it is fed thereto, of an electric motor for actuating said tape puller, motor control means including an electric switch arm adapted to descend to close the circuit for said motor when the tape is fed to the projecting machine, a bracket fixed to rock with said switch arm, a roller on said bracket engaging the upper surface of the tape in advance of said projecting machine and adapted to descend and in turn cause said bracket to descend with said switch arm when the tape is fed to the projecting machine, a lever pivotally mounted on said bracket, and a spring urging said lever to engage the lower surface of said tape in advance of said roller to take up the slack as the tape is fed thereto.

8. In a stock quotation projecting machine, the combination with a tape pulling roller for pulling the tape through said projecting machine as it is fed thereto, of an electric motor for actuating said tape puller, motor control means including an electric switch arm adapted to descend to close the circuit for said motor when the tape is fed to the projecting machine, a bracket fixed to rock with said switch arm, a roller on said bracket engaging the upper surface of the tape in advance of said projecting machine and adapted to descend in turn to cause said bracket and said switch arm to descend when the tape is fed to the projecting machine, a finger on said bracket engaging the upper surface of said tape in advance of said roller, a pivotally mounted lever adapted to engage the tape, a spring for urging said lever to engage the lower surface of said tape in advance of said finger, a second lever pivotally mounted on said bracket, and a second spring urging said second lever to engage the lower surface of said tape between said finger and said roller, said levers, finger and roller cooperating to take up the slack in the tape as it is formed.

9. In a stock quotation projecting machine, the combination with a frame provided with a light aperture, a tape puller for pulling the tape across the light aperture formed in said frame as the tape is fed thereto, an electric motor for operating said tape puller, control means including a switch element for said motor adapted to descend to close a switch as the tape is fed thereto, rollers at either end of the light aperture formed in said frame across which the tape passes when crossing the light aperture formed in said frame, and slack take-up means in advance of the roller at the entrance side to the light aperture formed in said frame to take up the slack as the tape is fed thereto and in turn dissipate the vibrations transmitted to the tape while so being fed, said switch element and slack take up means being pivotally mounted about a common axis.

10. In a stock quotation projecting machine, the combination with a frame provided with a light aperture, a roller at the entrance end to the light aperture formed in said frame, a tape puller for pulling the tape across said roller and the light aperture formed in said frame as it is fed thereto, an electric motor for operating said tape puller, a bracket, and mounted on said bracket a combined slack take-up means and control means for said electric motor, the control means including an electric switch arm resting on the tape in advance of said roller, and the slack take-up means co-operating with the lower surface of the tape in advance of said switch arm to dissipate the vibrations transmitted to the tape as it is being fed thereto.

11. In a stock quotation projecting machine, the combination with a housing provided with a light aperture, a roller at the entrance end to the light aperture formed in said housing, a tape puller for pulling the tape across said roller and the light aperture formed in said housing as it is fed thereto, an electric motor for operating said tape puller, a bracket, and mounted on said bracket a combined slack take-up means and control means for said electric motor, the control means including an electric switch arm resting on the tape in advance of said roller, and the slack take-up means including a spring pressed lever engaging the lower surface of the tape in advance of said switch arm to take up the slack as it is formed in the tape.

12. In a stock quotation projecting machine, the combination with a tape support provided with a light aperture, of a tape puller for pulling the tape across said tape support as the tape is fed thereto, an electric motor for operating said tape puller, control means including a switch element for said motor adapted to descend to close a switch as the tape is fed thereto, and slack take-up means in advance of said tape support to take up the slack as the tape is fed thereto and in turn dissipate the vibrations transmitted to the tape while so being fed, said switch element and slack take-up means being pivotally mounted about a common axis.

13. In a stock quotation projecting machine, the combination with a tape support provided with a light aperture, of a tape puller for pulling the tape across said tape support as it is fed thereto, an electric motor for operating said tape puller, a bracket, and mounted on said bracket a combined slack take-up means and control means for said electric motor, the control means including an electric switch arm resting on the tape in advance of said tape support and the slack take-up means cooperating with the lower face of the tape in advance of said switch arm to dissipate the vibrations transmitted to the tape as it is being fed thereto.

14. In a stock quotation projecting machine, the combination with a tape support provided with a light aperture, of a tape puller for pulling the tape across said tape support as it is fed thereto, an electric motor for operating said tape puller, a bracket, and mounted on said bracket a combined slack take-up means and control means for said electric motor, the control means including an electric switch arm resting on the tape in advance of said tape support and the slack take-up means including a spring pressed lever engaging the lower surface of the tape in advance of said switch arm to take up the slack as it is formed in the tape.

AUGUST D. EITZEN.