Oct. 7, 1941. E. J. HULL 2,258,493

HYDRAULIC OPERATOR

Filed Jan. 25, 1940 4 Sheets-Sheet 1

Fig. 1.

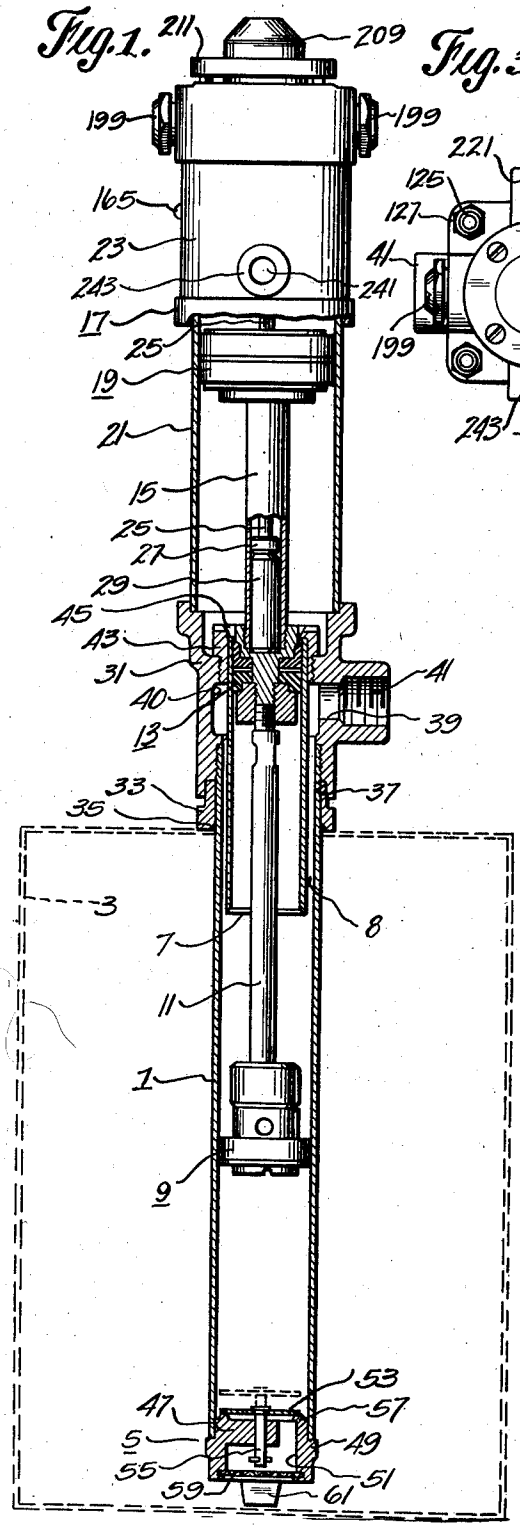

Fig. 3.

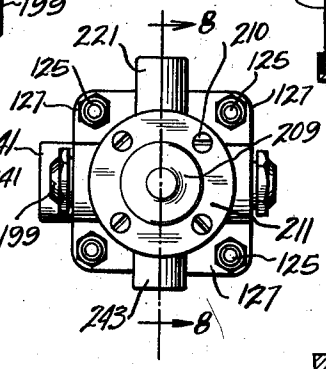

Fig. 2.

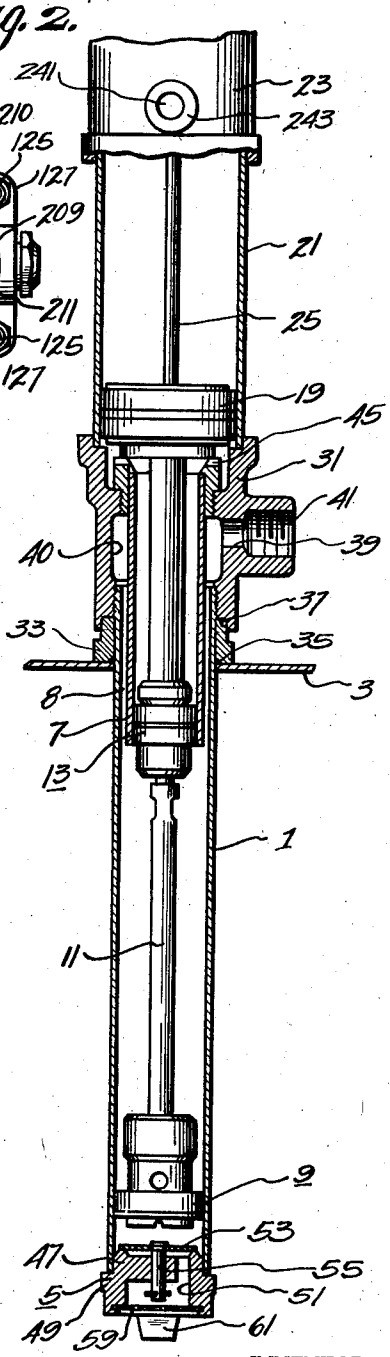

INVENTOR.
Edwin J. Hull.

BY Ralph S. Binns
ATTORNEY.

Oct. 7, 1941. E. J. HULL 2,258,493

HYDRAULIC OPERATOR

Filed Jan. 25, 1940 4 Sheets-Sheet 2

Fig. 4.

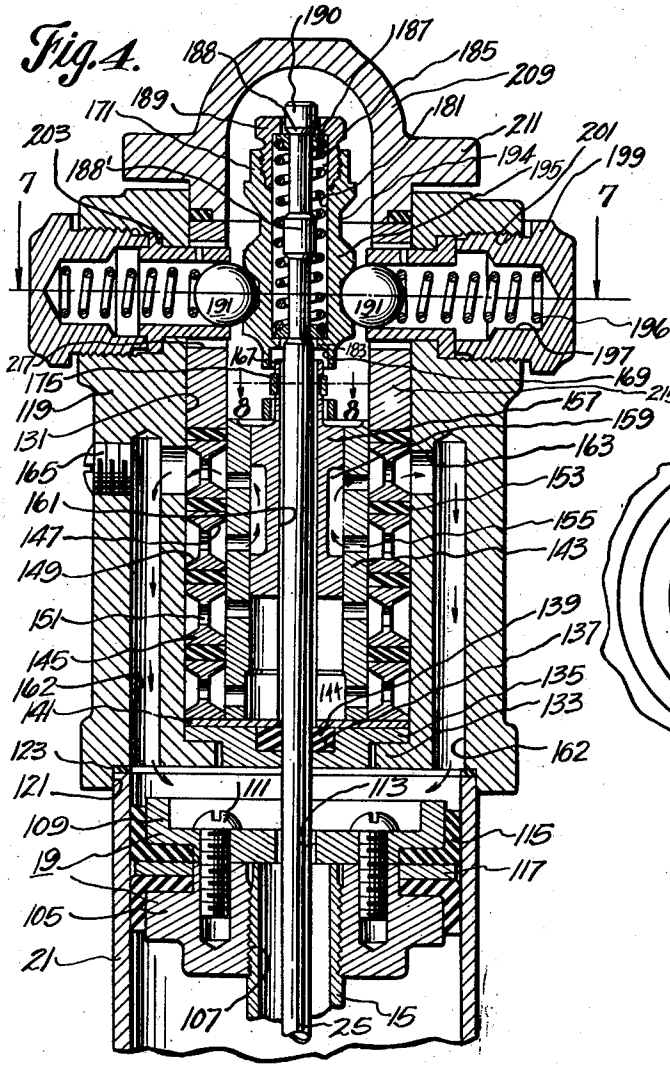

Fig. 5.

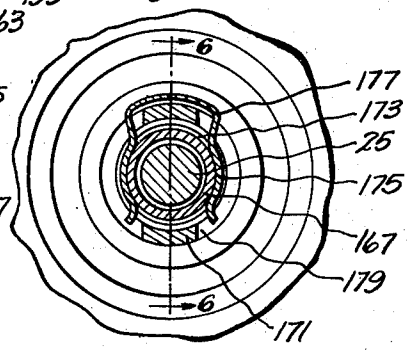

INVENTOR.
Edwin J. Hull.

BY Ralph S. Dano.
ATTORNEY.

Oct. 7, 1941. E. J. HULL 2,258,493

HYDRAULIC OPERATOR

Filed Jan. 25, 1940 4 Sheets-Sheet 3

Fig. 6.

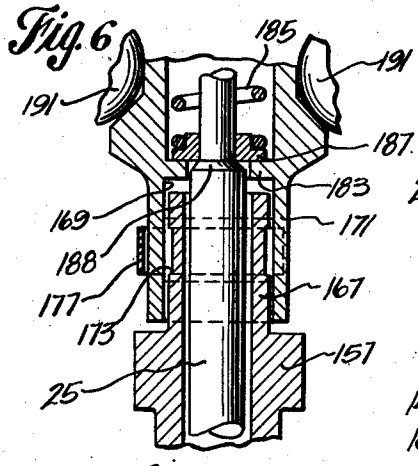

Fig. 9.

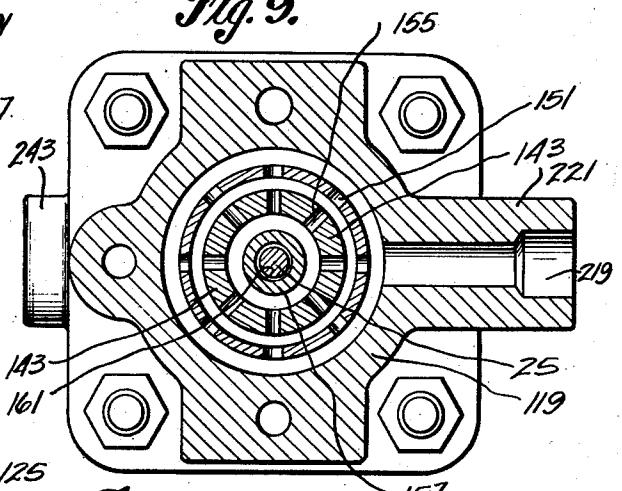

Fig. 11.

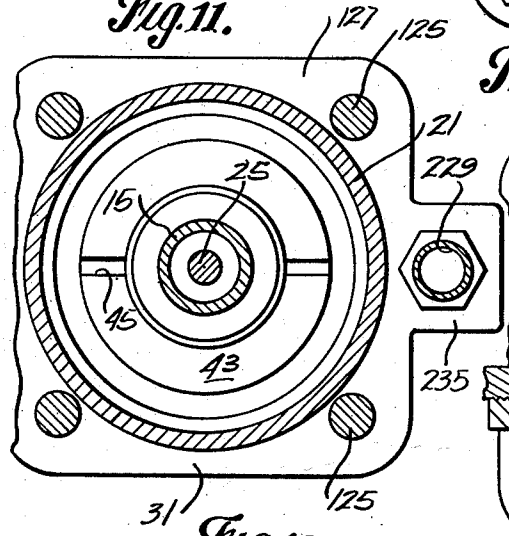

Fig. 7.

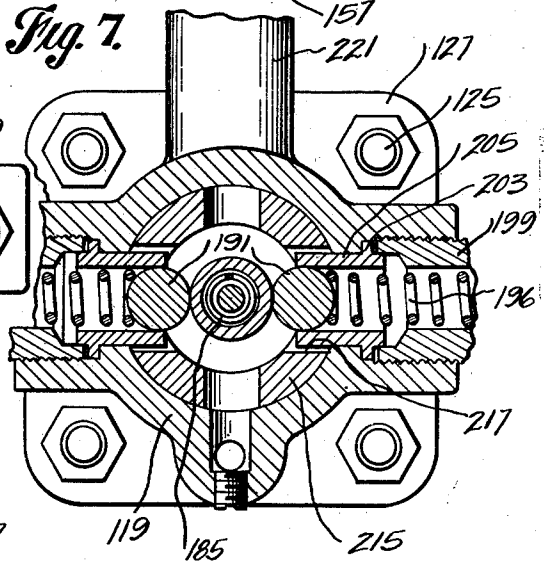

Fig. 10.

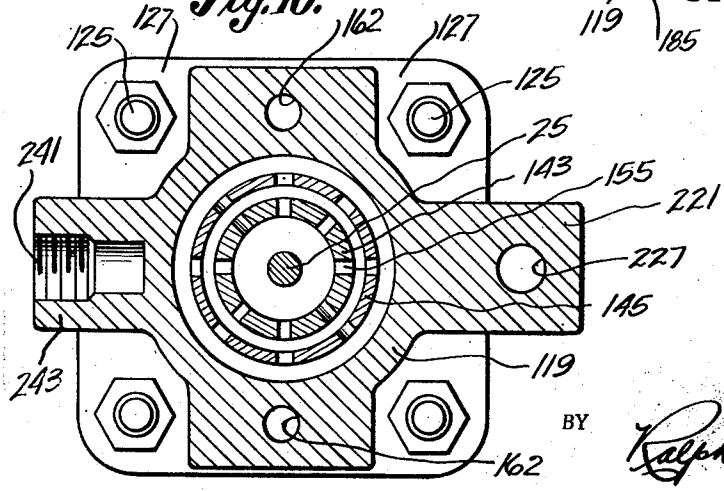

INVENTOR.
Edwin J. Hull.
BY
Ralph S. Barnes
ATTORNEY.

Oct. 7, 1941. E. J. HULL 2,258,493

HYDRAULIC OPERATOR

Filed Jan. 25, 1940 4 Sheets-Sheet 4

Fig. 13.

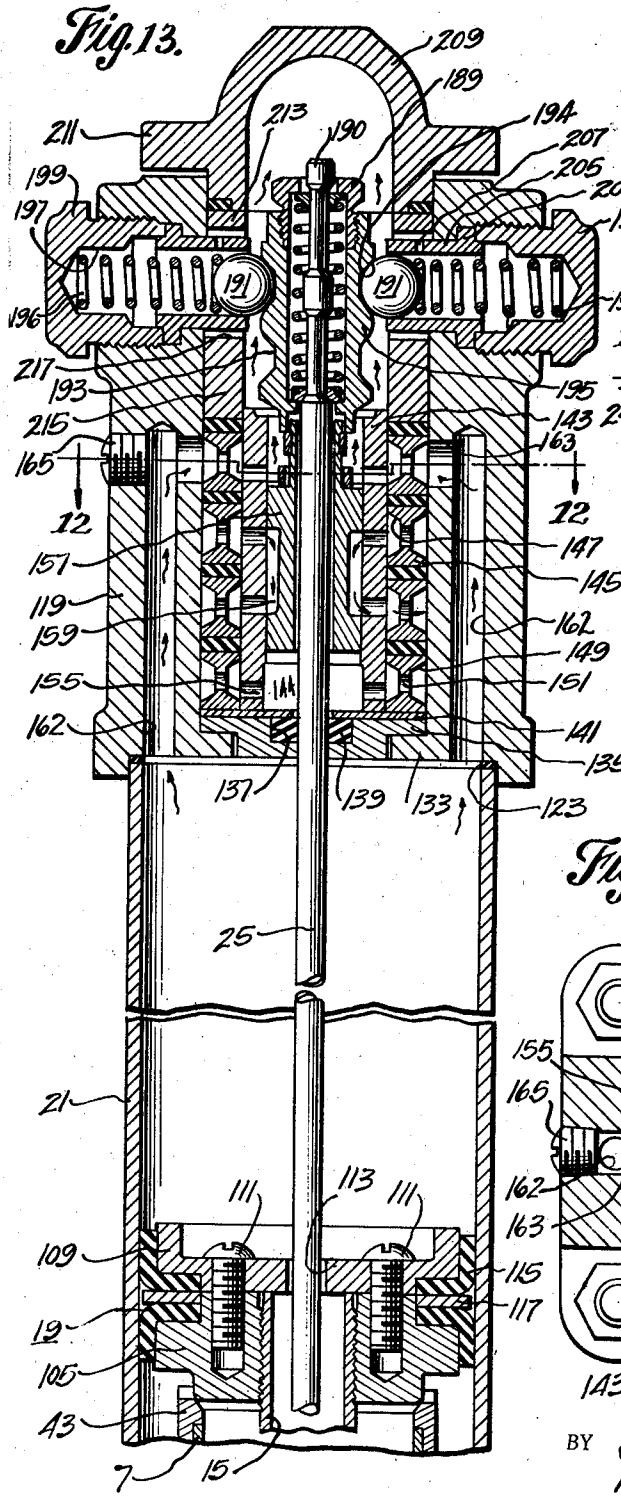

Fig. 8.

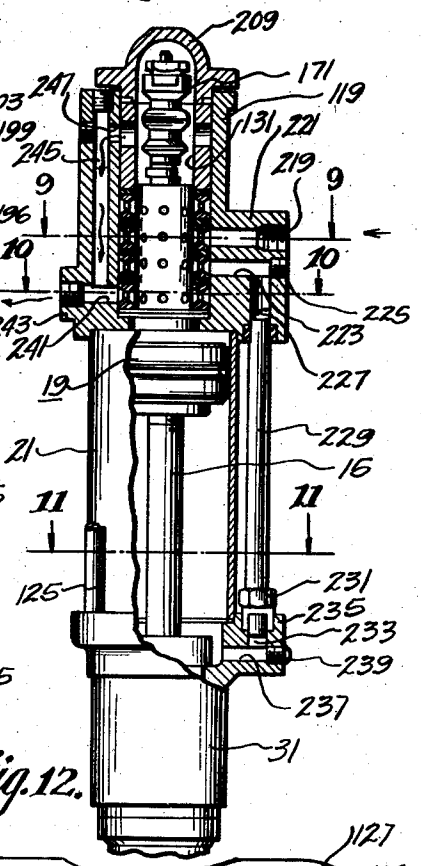

Fig. 12.

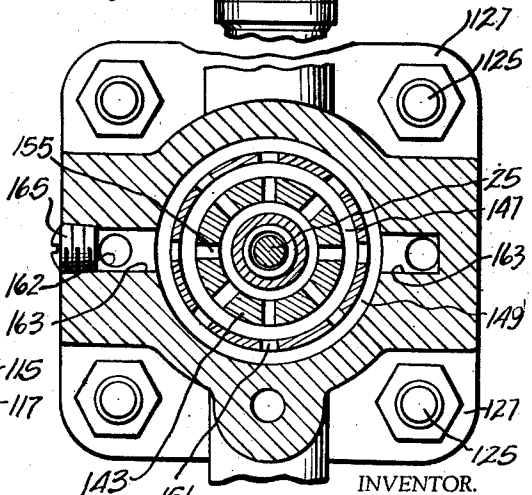

INVENTOR.
Edwin J. Hull.

BY Ralph A. Binns
ATTORNEY.

Patented Oct. 7, 1941

2,258,493

UNITED STATES PATENT OFFICE

2,258,493

HYDRAULIC OPERATOR

Edwin J. Hull, Cleveland, Ohio, assignor to Trabon Engineering Corporation, Cleveland, Ohio, a corporation of Ohio

Application January 25, 1940, Serial No. 315,563

7 Claims. (Cl. 121—164)

My invention pertains to an improved hydraulic operator and to improved snap action valve operating mechanism.

It is an object of my invention to provide a hydraulic operator having an improved simplified valve construction such that any desired number of sets of ports may be conveniently, simply and economically provided, each having any desired number of port holes for ample flow capacity arranged in accurate cooperative relation to a simple balanced valve and conductively related to suitable fluid flow passages in an enclosing housing.

Another object of my invention is to provide such a hydraulically operated device in which the movable valve is balanced both radially and longitudinally to provide for freedom of operation and reduction of wear.

A further object of my invention is to provide a hydraulic control valve comprising an improved valve actuating mechanism.

A further object of my invention is to provide, in a hydraulic operator, lost motion between the valve and its actuator whereby the valve will not shift until after its snap acting mechanism has passed dead center.

Further objects and advantages are within the scope of my invention, such as relate to the arrangement, operation and function of the related elements of the structures, to various details of construction and to combinations of parts, elements per se, and to economies of manufacture and numerous other features as will be apparent from a consideration of the specification in conjunction with the drawings disclosing a specific embodiment of my invention, similar reference characters being applied to similar elements throughout; and in which:

Fig. 1 comprises a side elevational view of my improved hydraulic operator shown in conjunction with a barrel pump, partially broken away and sectioned to show the internal elements thereof, the pump and hydraulic pistons being shown in the uppermost position, and the barrel being shown in dotted lines;

Fig. 2 is a similar view showing the pistons of the pump and the hydraulic operator in the lowermost positions;

Fig. 3 is a top plan view of the hydraulic operator;

Fig. 4 is an enlarged central sectional view of the hydraulic valve and housing portion of the unit, which is shown in elevation in Figs. 1 and 2, the hydraulic piston and valve being shown in the uppermost position;

Fig. 5 is an enlarged cross-sectional or detail view, taken on line 5—5 of Fig. 4, to show the arrangement of the spring clip, in the slack motion connector for coupling the valve with the spring floating spool on the valve rod;

Fig. 6 is a central sectional detail view taken on line 6—6 of Fig. 5, showing the slack motion connection between the valve and the cam spool;

Fig. 7 is a cross-sectional view on line 7—7 of Fig. 4 showing the snap acting cam operator for the valve;

Fig. 8 is a central sectional view taken on line 11—11 of Fig. 3 and shown on the same scale, the lower portion of the unit being shown partially in elevation and partially broken away (showing a section through the valve mechanism substantially at right angles to the section view shown in Fig. 4);

Fig. 9 is an enlarged cross-sectional view taken on line 9—9 of Fig. 8;

Fig. 10 is an enlarged cross sectional view on line 10—10 of Fig. 8;

Fig. 11 is an enlarged cross sectional view on line 11—11 of Fig. 8;

Fig. 12 is a cross-sectional view taken on line 12—12 of Fig. 13; and

Fig. 13 is a central sectional view of the hydraulic mechanism similar to Fig. 4, except that in this view the mechanism is shown in the lowermost position.

Referring more particularly to Figs. 1, 2 and 3 of the drawings, by improved hydraulic operator is shown in conjunction with a barrel pump, comprising a compact efficient assembly of several parts or elements consisting of a main or lower pump cylinder 1 made of tubing selected of a suitable diameter and length for insertion through the bung of any grease or oil barrel or drum 3 (shown in dotted lines) which it is desirable to evacuate. The pump cylinder 1 may be constructed in various lengths for use in different sizes of grease drums, as this tube must be long enough to come within approximately one inch of the bottom of the grease drum. The lower end of the cylinder tube opens from the drum through a check valve unit 5 of any suitable construction. An inner or upper pump cylinder 7 is concentrically supported in the upper end of the main pump cylinder providing an annular liquid discharging passage 8 therebetween. Where the hydraulic operator is otherwise used, this cylinder 7 coacts with a coupler member 13 that unites the hydraulic operating rod to the piston shaft in forming a stuffing box. A piston assembly 9 slides snugly in the main pump cyl-

inder 1 and is connected operatively through a piston rod 11 to a smaller piston 13 which slides snugly in the smaller cylinder. From the other side of the smaller pump piston 13 a tubular piston rod 15 extends upwardly for connection with a hydraulic operator by which the two pump pistons are simultaneously actuated in the respective pump cylinders. Underscored reference characters designate a unit or assembly broadly, rather than specific elements thereof. The piston rod 11 acts as the hydraulic operating rod for performing useful work where the hydraulic operator is not used for operating a pump.

The hydraulic operator comprises a hydraulic piston assembly 19 secured on the upper end of the tubular piston rod 15 and operatively slidable in a hydraulic cylinder 21. On the upper end of the cylinder 21 is mounted a valve housing 23, enclosing an improved valve and valve actuating mechanism to be subsequently described. A valve actuating rod 25 extending down from the valve mechanism through the piston 19 into the hollow piston rod 15, has a collar 27 firmly secured on the lower end of the rod in any suitable manner, as by riveting. Resting loosely in the bottom of the hollow piston rod 15 is a spacer 29 which engages the lower end of the valve rod and pushes it up to actuate the valve as the hydraulic piston rod approaches the upper end of each stroke. When the hydraulic piston 19 moves down, approaching the lower end of each stroke, the collar 27 is engaged by a portion of said piston (hereafter to be described) to draw the valve rod 25 down, and the hydraulic piston continues to reciprocate to actuate the pump pistons as long as fluid under pressure is supplied thereto, in a manner to be subsequently more fully described.

Fig. 1 also shows the construction of a connector casing 31, which may be made of any suitable cast metal, and which, in this instance, serves to connect together, in suitably spaced relation, the adjacent ends of the pump cylinders 1 and 7 and the hydraulic cylinder 21. Where the rod 11 is to be used as a power operator, the cylinder 1 and the other pump parts are omitted, the connector casing 31 then merely connecting cylinders 7 and 21. For this purpose the connector casing 31 is provided. It is preferably a hollow casting of a generally tubular conformation being internally threaded in the lower end for receiving the upper end of the large pump cylinder tube 1 which has a corresponding external thread. The pump cylinder 1 is provided with an annular collar 33, which is secured in any suitable manner, as by welding 35, and the top side of the collar is of a substantially reduced diameter for fitting into an annular recess or enlarged counterbore 37 in the lower end of the aperture in the casing 31. Suitable packing may also be provided.

As here illustrated and shown, a discharge port 39, opening from the side of the casing 31, is provided with an enlarged, internally threaded, counterbore 41 in the open outer end for connection with any suitable pipe or hose through which the pumped liquid is to be delivered. The discharge port 39 opens from an enlarged annular passage 40 in the casing which collects liquid from the upper end of the annular space 8 between the two pump cylinders 1 and 7, and leads the liquid to the outlet port 39 with a minimum loss of pressure due to friction.

Above the discharge port 39, the casing 31 is internally threaded for receiving and firmly supporting an annular collar 43 in which the upper end of the smaller pump cylinder 7 is attached in any suitable manner. Suitable wrench receiving depressions 45 are provided in the upper side of the cylinder supporting collar. The cylinder 7 supported at the upper end in the collar 43 serves also to close the upper end of passage 8 so that liquid lifted or forced therein by the movements of either pump piston is forced out of the pump casing through the discharge port 39. The upper end of the casing 31 is provided with an enlarged counterbore for receiving and seating the lower end of the hydraulic cylinder 21 in aligned relation with the pump cylinders.

Fig. 1 also shows the construction of a suitable check valve unit 5 for the lower end of the pump cylinder 1 although various types of suitable check valves are available. Such a check valve may comprise a valve body, which may be a casting 47 of a generally circular cross-section and of a suitable reduced diameter for fitting into the lower end of the pump cylinder having a flange 49 of enlarged diameter forming a shoulder for abutting the lower edge of the pump cylinder. A passage 51 opens through the valve casting 47 into the pump cylinder. For closing the passage 51 against reverse or downward flow, a valve disk 53 is disposed thereabove on the upper end of a guide stem 55 which slides in the valve casting. To provide a good seating contact, a raised bead or flange 57 of generally annular conformation may be provided on the upper side of the valve casting 47 around the port 51 for engaging the valve disk. A screen 59 is preferably secured in the lower opening of the valve passage 51 to prevent the entrance of dirt and foreign matter. Spacing lugs 61 are preferably provided projecting down from the valve casting 47 to support it spaced above the bottom of the drum 3 so that the grease or other liquid may freely enter the pump. As the lower pump piston 9 is lifted, the check valve 53 is lifted to the uppermost position, indicated by dotted lines, in Fig. 1, and grease from the drum flows through the check valve passage 51 into the space in the lower end of the larger pump cylinder 1 evacuated by the piston.

As the piston 9 begins to descend, the check valve 53 closes, as seen in Fig. 2, trapping the grease which then passes through a check valve in the piston 9 so that the grease previously drawn into the cylinder 1 is then above the piston instead of below it.

The trapped liquid under the piston 9 can not escape from the bottom of the pump cylinder 1 because the check valve 53 closes, so the grease under the piston 9 passes through the piston into the space above the piston. When the piston 9 reverses and moves up, the usual check valve therein closes and the piston lifts the quantity of grease above it, forcing it through annular passage 8 between the two pump cylinders and out of the discharge port 39. At the same time a fresh charge of grease is being drawn into the bottom of the pump cylinder 1 below the piston 9. Each downward stroke of the pump pistons also discharges a quantity of grease from the discharge port 39 because, as the upper piston 13 moves down, it displaces a quantity of grease from the cylinder 7. Since the displaced grease can not go down and escape from the bottom of

the pump cylinder 1 because of the closing of the check valve 5 as previously explained, since the grease below piston 9 passes therethrough to a position above piston 9, a volume of grease equal to that displaced from cylinder 7 is forced up through the annular passage 8, between the two pump cylinders 1 and 7, and out through the discharge port 39.

In this manner a double action is obtained as the pump is operated to deliver grease or other liquid from the drum 3. Both pistons 9 and 13 are preferably arranged to displace, i. e., discharge a like volume of grease in order to make the double action of the pump as uniform as possible. To accomplish this, it is desirable to have the displacement capacity of cylinder 7 as nearly equal to half that of the lower cylinder as possible. When this relation is established, the volume of grease lifted by the upward stroke of the large piston is divided, half following the smaller piston to fill the space that would otherwise be evacuated by its upward movement and the other half of the grease being forced out of the discharge port 39. On the downward stroke the smaller piston then displaces and discharges the other half of the volume of grease which was previously lifted. The downward stroke of the lower or larger piston 9 does not cause any discharge of grease because the usual check valve in this piston merely opens and permits the grease to flow through this piston.

Fig. 1 shows the construction of the coupling member 13 which connects rods 15 and 11 and which slides in the inner pump cylinder 7 for displacing grease on the down stroke of the pump, otherwise acting merely as a stuffing box for the hydraulic operator. Any suitable sliding sealable means may be used to couple the rods 15 and 11 together, so long as the fluid under pressure in the cylinder 21 cannot escape through the cylinder 7, or where the device is not to be used as a pump, the stuffing box may be fixedly mounted and the rod 11 may comprise an extension of the rod 15 which merely slides through the stuffing box. Referring to Fig. 4 the hydraulic operator comprises a hydraulic piston 19 which reciprocates in the hydraulic cylinder 21 in response to different fluid pressures applied alternately to opposite sides of the piston by means of an improved valve mechanism, to be subsequently described. A piston suitable for this purpose may comprise a piston member 105 having a central aperture 107 therethrough which is internally threaded for firmly receiving the upper threaded end of the tubular piston rod 15 through which the working forces are transmitted for actuating the pump pistons. A complementary piston member 109 is secured on the upper side of the main piston member 105, as by screws 111 passing thereinto. The complementary piston member may substantially close the upper end of the aperture 107 in the main piston member except for a smaller aperture 113 which freely passes the valve rod 25 through to the bottom of the hollow piston rod 15 but engages the collar 27 attached on the lower end of the rod (Fig. 1), when the piston moves down far enough. The hollow piston rod 15 may be turned into the threaded central aperture 107 in the main piston member until the upper end abuts the complementary piston member, as shown.

A pair of yieldable piston leathers 115 of usual cup shape are clamped between the two piston members of the hydraulic piston with the cupped edges turned in opposite directions for fitting snugly between the peripheries of the two piston members and the cylinder walls to provide a tight sealed contact therebetween. A spacing washer 117 may also be inserted between the leathers as shown. It is to be understood that the so-called pump "Leathers" may be made of any suitable yieldable material, or if desired piston ring types of pistons may be utilized in the hydraulic operator and in the pumps.

Fig. 4, also shows the valve mechanism, comprising a valve housing 119 which fits upon the upper end of the hydraulic cylinder 21 for controlling the application of different fluid pressures alternately to opposite sides of the hydraulic piston for working the pumps. The valve housing may be a casting of any metal selected suitably in accordance with the pressure, temperatures and chemical or corrosive properties of the medium to which it will be exposed, in accordance with the usual practice. The lower end of the valve housing 119 is provided with circular recess 121 suitably machined to fit snugly on the upper end of the hydraulic cylinder 21. A compressible gasket 123 of annular shape may be placed on the upper and lower ends of the tubular cylinder 21 for making sealed joints. For drawing the valve housing and the connector casing 31 firmly together, clamping upon the opposite ends of the hydraulic cylinder tube 21, suitable bolts 125 are passed through cooperative pairs of corner lugs 127, as shown in the plan view Fig. 3, for example.

The valve housing 119 is provided with a central aperture or bore 131 of large diameter which opens from the top of the housing and has a flange or shoulder 133 turned inwardly toward the axis of the bore around the bottom or lower edges thereof. The valve rod 25 projects up axially through the central aperture in the valve housing, the upper end extending slightly above the upper end of the housing. The lower end of the main bore 131 is closed by a bottom disk 135 which fits snugly down upon the flange 133 and has a central aperture for slidably passing the valve rod 25 therethrough. The top side of the bottom disk is also provided with a packing gland 137 surrounding the valve rod and packed with any suitable yielding packing material 139 for providing a liquid seal therewith. A circular plate 141 suitably apertured to pass the valve rod 25, is placed down on the bottom disk to clamp the packing around the valve rod.

A stationary ported cylinder 143 is disposed in the central aperture 131 supported in concentric spaced relation from the side walls thereof by a plurality of annular spacer rings 145, each having an inner groove 147 and an outer groove 149 connected together through passages 151 extending radially through the web portion of the ring between the inner and outer groove. Between the spacer rings 145 annular gaskets 153 are inserted, made of any suitable yieldable material which is oil proof and of a size suitable for fitting snugly between the inner surface of the central aperture 131 and the outer surface of the port cylinder. In this manner the annular fluid conducting passage defined by the grooves in each spacer ring is separated and hermetically sealed from the adjacent annular spaces defined by the spacer ring either above or below. As shown, there are four such spacer rings 145 and the annular grooves so defined are separately designated as the first, second, third or fourth from the top for convenience in tracing the operation of the hydraulic operator. The ported cylinder 143 is

provided with four sets of circumferentially spaced port holes 155, the different sets being positioned at four different elevations above the bottom of the central aperture suitable for connection with the four separately enclosed annular spaces in the spacer rings 145. Sliding snugly in the valve port cylinder 143 is a balanced valve 157 of generally cylindrical conformation and having a wide groove 159 cut circumferentially in the outer surface. The valve groove 159 extends axially on the outer surface of the valve a distance which is greater than the axial distance between axially spaced different sets of port holes 155 in the ported cylinder, as shown. The valve 157 and the ported cylinder 143 are finished for a snug fit so that a light working liquid or oil may be used under pressure for actuating the hydraulic operator. A central aperture 161 is provided extending axially through the valve and of a suitable size for passing the valve rod 25 freely therethrough. From the lower end of the valve housing, fluid conducting passages 162 are drilled up axially into the side walls of the valve housing 119 around the central aperture to provide a conduit from the upper end of the hydraulic cylinder 21. The upper ends of these passages 162 are connected into the central passage in the housing by drilling passages 163 diametrically from one side of the housing and closing the outer opening by means of a plug 165. Any desired number of such passages may be similarly provided. As shown, the diametral passage 163 is suitably disposed to connect into the annular grooves defined by the top spacer ring 145.

As may be seen from Figs. 4, 5 and 6, the valve 157 is not directly actuated from the valve rod 25, which slides freely therethrough, but is actuated through a slack motion connection comprising a thin neck or sleeve 167 which extends up around the valve rod 25 from the upper end of the valve into a recess 169 in the lower end of a cam spool 171. An annular groove 173 is provided in the outer surface of the valve neck 167 for receiving in opposite sides the two resilient prongs 175 of a spring clip 177 in a manner, which may be seen more clearly in Figs. 5 and 6, where it may also be seen that the side wall 171 which surrounds the recess 169 in the cam spool is provided with oppositely disposed slots 179 for passing the spring prongs 175 through to engage the valve neck 167. The slots 179 in the lower end of the cam spool 171 are axially longer than the axial dimension or width of the spring prongs 175 passed therethrough, and this amount of slack motion is provided between the valve 157 and the cam spool. When the cam spool 171 is moved down or up sufficiently so that the upper or lower side of the slot 179 engages the lower or upper edge of the spring clip prongs 175, a positive driving connection is established and the valve is actuated.

Fig. 4 shows that the cam spool 171 is provided with an axial aperture 181 having a reduced portion providing a flange ring 183 at the lower end through which the upper end of the valve rod 25 passes. The inserted portion of the valve rod 25 is of reduced diameter and receives a compression spring 185 concentrically thereon for pushing apart a pair of split retaining rings 187 closed thereon for engaging the spaced shoulders 188 thus provided on the rod. An intermediate shoulder 188' on the reduced portion may under certain conditions positively engage ring 187 to drive positively. The upper end of the aperture 181 is provided with a threaded enlarged counterbore which receives an apertured thimble 189 screwed therein with the upper end of the rod passing through the aperture and having a knob 190 of larger diameter thereon. The retaining rings are thus spring pressed apart against the thimble 189 at the upper end of the cam spool and the flange ring 183 at the lower end of the spool and a movement of the valve rod up or down engages a shoulder on the rod against the lower or upper spring pressed retaining ring respectively.

For restraining the movement of the cam spool 171 until a predetermined actuating force has been applied, I provide a pair of spring pressed ball contactors or camming balls 191 engaging the outer side surfaces thereof at diametrically opposite points as shown in Figs. 4 and 7. To provide suitable camming surfaces to be engaged by the contactor balls 191 on the outer surface of the cam spool, a pair of grooves 193 and 194 are cut circumferentially therein at axially spaced positions, as shown. When the cam spool 171 is at the upper position, the contact balls 191 nest snugly in the lower groove 193, and when a predetermined actuating pressure has been applied to draw the spool 171 down, the camming balls suddenly climb over the separating ridge 195 and enter the upper groove 194 causing the cam spool to snap down, engaging the spring prongs 175 on the neck 167 of the valve 157 and throwing the latter suddenly to its lowest extreme position.

The camming balls 191 are each continuously pressed in against the cam spool 171 by a compression spring 196, the inner end of which rests against the ball, the outer end being nested in a pocket 197 in a spring cap 199 screwed into a threaded aperture 201 opening outwardly from the valve housing. A ball guide sleeve 203 is secured against the bottom of the threaded aperture with a reduced portion 205 extending through a smaller aperture into the central bore 119 and receiving the ball for slidably guiding the movements thereof adjacent the cam spool. A hole 207 is provided in the upper side of the ball guiding sleeve for receiving lubricant to minimize friction and wear on the cam ball. The outer end of each spring cap 199 is suitably shaped to receive a wrench for removal or adjustment.

The upper end of the central aperture or bore 131 in the valve housing is closed by a dome cover 209 having a laterally extending flange 211 for abutting the upper surface thereof and a cylindrical flange 213 for fitting down into the central aperture in the housing. On top of the spacer rings 145 is a cylindrical sleeve 215 which extends up above the camming balls 191 and has apertures 217 through which the ball guides 205 are passed.

Fig. 8, which is a vertical view taken through the hydraulic operator at right angles relative to Fig. 4, shows the inlet port 219 which is drilled through a boss 221 projecting from the side of the valve housing at a suitable position for conductively connecting with the second groove and the second set of port holes on the central aperture. The inlet port 219 is also seen in the cross-sectional view shown in Fig. 9. The boss 221 is also drilled to provide a passage 223 entering the housing below the inlet port at a position for connecting with the third groove and the third set of port openings in the port cylinder. The outer end of the drilled passage 223 is closed by a plug 225. An intersecting passage 227 is drilled to open down and is arranged to receive one end

of a pipe 229 which extends down to a suitable pipe fitting 231 connecting into a passage 233 in a boss 235 projecting laterally from the pump connecting casing 31. A passage 237 is drilled radially into the casing intersecting the lower end of the upward passage 233 and closed by a plug 239 at the outer end. In this manner a conductive connection is provided from the lower end of the hydraulic cylinder 21 by way of passages 237, 233, 229, 227 and 223 into the third set of port holes 155 in the port cylinder 143. Any desired number of such passages may be provided.

Figs. 8 and 10 also show the exhaust port 241 drilled radially through boss 243 into the valve housing to enter the lower spacer ring and the lower set of port holes. The exhaust also connects up through passages 245 and 247 into the space in the central aperture 131 in the valve housing above the valve and the spacer rings. This latter exhaust connection is effective each time the valve 157 moves down to its lower position, as shown in Fig. 13, when the working pressure oil that is exhausted from the upper end of the hydraulic cylinder enters the central aperture or bore of the valve housing through the upper set of port holes of the ported cylinder and then flows up through the upper port of the central aperture around the valve mechanism, which it lubricates and cleanses, and passes down and out through the exhaust passages 247, 245 and 241. As will be understood the inlet port 219 of the valve housing is connected through any suitable conduit or hose having a control valve to a source (not shown) of working fluid under pressure such as oil, and the exhaust port is also similarly connected for returning the exhausted oil to the source.

In operation, when my hydraulic operator is coupled to a barrel pump as illustrated, the outer cylinder 1 of the pump is inserted into the barrel or drum 3 of grease, as shown in Fig. 1, with the lower end spaced slightly above the bottom by the spacing lug 61. The high pressure working fluid is then admitted into the hydraulic operator where it is continuously applied in the second spacer ring 145 from the top from the inner end of the inlet passage 219 as previously described. Assuming that the hydraulic piston 19 is up and the valve is positioned, as shown in Fig. 4, the high pressure working fluid passes up through the wide groove 159 in the valve, through the top set of port holes 155, and by way of passages 163 and 162 into the upper end of the hydraulic cylinder 21 forcing the piston 19 downwardly. The working oil previously admitted below the piston 19 is exhausted (see Fig. 8) by way of passages 237, 233, 229, 227 and 223 into the third spacer ring from the top in the valve housing. The exhaust fluid then enters the central orifice 144, in the ported cylinder below the valve, through the third set of port holes 155 and passes down and out through the bottom set of port holes 155, the bottom spacer ring 145 (see Fig. 8) the exhaust port 241.

As the piston approaches the bottom of its stroke, the upper piston member 109 strikes the collar 27 secured on the lower end of the valve rod 25. The downward movement of the valve rod 25 pulls down on the ring 187 on the upper end of the compression spring 185 in the cam spool and, when the spring tension is sufficient, it overcomes the pressure of the springs 196 and snaps the cam spool to the lower position with a quick snappy action, the cam balls 191 quickly climbing over the separating cam ridge 195 and entering the groove 194, the springs 196 then being compressed, aid in the cam action of snapping the spool to its lowermost position. The slack motion is suddenly taken up in the slack motion connection as the upper edge of the slots 179 in the lower end of the cam spool engages the upper edge of the spring clip 177 which is on the neck 167 of the valve. The valve 157 being struck as by impact, is thus moved with the spool in the major portion of the latter's stroke, with a quick snappy action to its lowermost extreme position, as shown in Fig. 13, and reverses the connection so that the high pressure working fluid is now applied in the lower end of the hydraulic cylinder from the second spacer ring groove down through the groove 159 in the valve, through the third set of port holes 155 from the top, and thence (as shown in Fig. 8) by way of passages 223, 227, 233 and 237 into the lower part of the hydraulic cylinder to move the hydraulic piston 19 up.

In the above action, I desire to point out one important feature. As the valve groove 159 is of an axial length greater than the spacing of the ports 155, the initial movement of the valve does not immediately cut off or reserve the hydraulic pressure. Hence hydraulic pressure is available for moving the piston 19 to its extreme travel, thus continuing the movement of the valve rod so as to compress the cam compression spring 185 sufficiently to overcome all resistance to movement of the cam spool 171 (such as friction and the cam balls 191 held in the cam grooves by springs 196) and to force the camming balls 191 to climb over dead center of the separating ridge 195, before the hydraulic pressure is suddenly cut off in one direction of flow.

The piston 19 now moves upwardly and working fluid previously admitted above the piston is exhausted by way of passages (see Fig. 13) 162, 163, the upper spacer ring and set of ports 155, into the central orifice 144 above the valve 157 thence up around the valve mechanism in the upper part of the valve housing and out by way of (see Fig. 8) exhaust passages 247, 245 and 241. As the piston 19 approaches the upper limit of its stroke, the lower end of the valve rod 25 is engaged by the spacer 29 in the bottom of the hollow piston rod 15 moving the valve rod up. When the spring in the cam spool 171 has been sufficiently compressed, the spring pressed cam balls 191 being in the upper groove 194, as shown in Fig. 13, suddenly spread apart, the cam ridge 195 passes between, and the balls snap together into the lower groove 193. This snaps the cam spool 171 up and due to the slack motion connection moves the valve up with a quick snappy motion at the last moment. This cycle of operation is repeated by the hydraulic operator as long as suitable working pressure fluid is supplied in the intake port and, through the tubular piston rod 15, power is transmitted to reciprocate the pump pistons 13 and 9.

It is apparent that within the scope of the invention, modification, and different arrangements may be made other than herein disclosed, and the present disclosure is illustrative merely, the invention comprehending all variations thereof.

I claim:

1. A hydraulic motor having in combination, a hydraulic cylinder, a hydraulic piston slidable operatively in said cylinder, a valve housing se-

cured on one end of said hydraulic cylinder, a central aperture in said valve housing, said central aperture being of substantially cylindrical conformation and extending in substantial alignment with the axis of said hydyraulic cylinder, a ported cylinder of smaller diameter than said aperture, a plurality of sets of port holes opening through the side walls of said ported cylinder, the port holes of each set being spaced circumferentially around said ported cylinder and the respective sets of port holes being spaced axially at different axial positions in said ported cylinder, spacing rings disposed in the space between the ported cylinder and the side walls of said aperture for supporting said ported cylinder in a concentric spaced relation therein and corresponding in number to the number of sets of port holes in the ported cylinder, said spacing rings being spaced axially along the peripheral outer wall of said ported cylinder at distances or positions coinciding with the axially spaced sets of port holes in the ported cylinder, each spacing ring having a groove or cut out portion provided with ports in conductive connection with all the port holes of an adjacent set in the ported cylinder, a valve slidable in snug fitting relation in said ported cylinder, a groove in the outer peripheral wall of said valve, said groove extending circumferentially around said valve and being of sufficient axial length to simultaneously overlap for conductively interconnecting the port holes of two adjacent sets of port holes in the ported cylinder, fluid conducting passages extending from opposite ends of said hydraulic cylinder into said valve housing and connecting into the conductive grooves defined by two different spacer rings, an inlet port in said valve housing opening into another groove in another one of the spacer rings for applying a high pressure working fluid therein for working the hydraulic piston, an exhaust port opening from said housing and connecting from another one of the grooves defined in another spacer ring, said ports being so related that the valve by moving to either one of two extreme positions connects the inlet port to apply fluid pressure on either respective side of the hydraulic piston while connecting the other side thereof to exhaust, and valve operating means for actuating the valve to either extreme position substantially as the hydraulic piston completes a stroke in either direction.

2. A hydraulic motor comprising the combination defined by claim number 1 and having yieldable gaskets between said spacing rings for sealing between the walls of the central aperture and the ported cylinder.

3. A hydraulic motor having in combination, a hydraulic cylinder, a hydraulic piston slidable operatively in said cylinder, a valve housing mounted on one end of said hydraulic cylinder, a central aperture in said valve housing, said central aperture being of substantially cylindrical conformation and extending in substantial alignment with the axis of said hydraulic cylinder, a ported cylinder of smaller diameter than said aperture, four sets of port holes opening through the side walls of said ported cylinder, the port holes of each set being spaced circumferentially around said ported cylinder and the respective sets of port holes being spaced axially at different axial positions in said ported cylinder, four spacing rings disposed in the space between the ported cylinder and the side walls of said aperture for supporting said ported cylinder in a concentric spaced relation therein, said spacing rings being spaced axially along the peripheral outer wall of said ported cylinder at distances or positions coinciding with the axially spaced sets of port holes in the ported cylinder, each spacing ring having a groove or cut out portion provided with ports in conductive connection with all the port holes of an adjacent set in the ported cylinder, a valve slidable in snug fitting relation in said ported cylinder, a groove in the outer peripheral wall of said valve, said groove extending circumferentially around said valve and being of sufficient axial length to simultaneously overlap for conductively interconnecting the port holes of two adjacent sets of port holes in the ported cylinder, fluid conducting passages extending from opposite ends of said hydraulic cylinder into said valve housing and connecting into the conductive grooves defined by two different spacer rings being the top ring and the third from the top, an inlet port in said valve housing opening into the groove in the second spacer ring from the top for applying a high pressure working fluid therein for working the hydraulic piston, an exhaust port opening from said housing and connecting from the groove defined in the bottom spacer ring and also opening from the space in said central aperture above said spacer rings and valve, said ports being so related that the valve by moving to its uppermost extreme position connects two uppermost sets of ports applying fluid pressure in the connected end of the hydraulic cylinder while connecting the other end of the cylinder to exhaust, and the valve by moving to the other extreme position, which is its lowermost position, connects the second and third sets of port holes applying pressure in the opposite end of the hydraulic cylinder while opening the upper set of port holes to the space in the central aperture above the valve for exhaust therethrough to the exhaust port, and valve operating means for actuating the valve to either extreme position substantially as the hydraulic piston completes a stroke in either direction.

4. A hydraulic motor comprising the combination defined by claim number 3 and having yieldable gaskets between said spacing rings for sealing between the walls of the central aperture and the ported cylinder.

5. A hydraulic motor having in combination, a hydraulic cylinder, a hydraulic piston slidable operatively in said hydraulic cylinder, a valve housing mounted on one end of said hydraulic cylinder, an inlet port in said valve housing for receiving a working fluid under pressure for actuating said hydraulic piston, an exhaust port in said housing for discharging working fluid from said hydraulic cylinder, fluid conducting passages extending from opposite ends of said hydraulic cylinder into said valve housing, a valve in said housing movable to either one of two extreme positions, fluid conducting ports and passages so arranged in conjunction with said valve that in one position thereof conductive connection is established from said inlet port and from said exhaust port through said passages to opposite ends of said cylinder for moving the hydraulic piston in a predetermined direction and in the other position of the valve the conductive connections are reversed for moving the piston in the opposite direction, a hollow piston rod extending from said hydraulic piston for transmission of power to a device to be operated, a valve rod extending from said valve into said hollow rod, cooperative engageable means actuated by said hydraulic pis-

ton and the hollow piston rod for reciprocating the valve rod when the hydraulic piston approaches either end of its stroke for throwing the valve to either alternate extreme position for reversing as the piston approaches the end of a stroke in either direction, and snap action means associated with said valve actuating means for moving the valve to either extreme position with a quick snappy action just as the piston has substantially completed its stroke.

6. A snap action valve operating mechanism comprising, a valve having an aperture extending axially therethrough, a valve rod extending slidably through the aperture in the valve, a spring concentrically disposed on an extending end of said valve rod, retaining members spaced apart on said rod for engaging the opposite ends of said spring for holding the spring compressed, obstruction means on said rod for limiting the axial movement of said retaining members apart from each other, either of said retaining members being movable toward the other for further compressing the spring, a cam spool having an aperture extending axially therethrough, said cam spool being disposed concentrically on said rod over said spring, the ends of the axial aperture in the spool being reduced to engage the retaining members compressing the ends of the spring, means connecting the cam spool operatively with the valve, the outer surface of said cam spool having camming irregularities, and resilient snapover means engaging said camming irregularities for moving the cam spool in either direction with a quick snappy action when it has been moved a predetermined distance in either direction by said rod.

7. A snap action valve operating mechanism comprising, a valve having an aperture extending axially therethrough, a valve rod extending slidably through the aperture in the valve, a spring concentrically disposed on an extending end of said valve rod, retaining members spaced apart on said rod for engaging the opposite ends of said spring for holding the spring compressed, obstruction means on said rod for limiting the axial movement of said retaining members apart from each other, either of said retaining members being movable toward the other for further compressing the spring, a cam spool having an aperture extending axially therethrough, said cam spool being disposed concentrically on said rod over said spring, one end of the axial aperture in the spool being reduced to engage one retaining member compressing one end of the spring, the other end of said aperture being internally threaded, a plug threadably disposed in the threaded end of said aperture and having an aperture of reduced diameter for passing the rod freely therethrough while engaging the other retaining member for compressing the other end of the spring, means connecting the cam spool operatively with the valve, the outer surface of said cam spool having camming irregularities, and resilient snapover means engaging said camming irregularities for moving the cam spool in either direction with a quick snappy action when it has been moved a predetermined distance in either direction by said rod.

EDWIN J. HULL.