Aug. 19, 1941. H. P. CHANDLER 2,253,363

PORTABLE DRILL

Original Filed Nov. 10, 1936 3 Sheets-Sheet 1

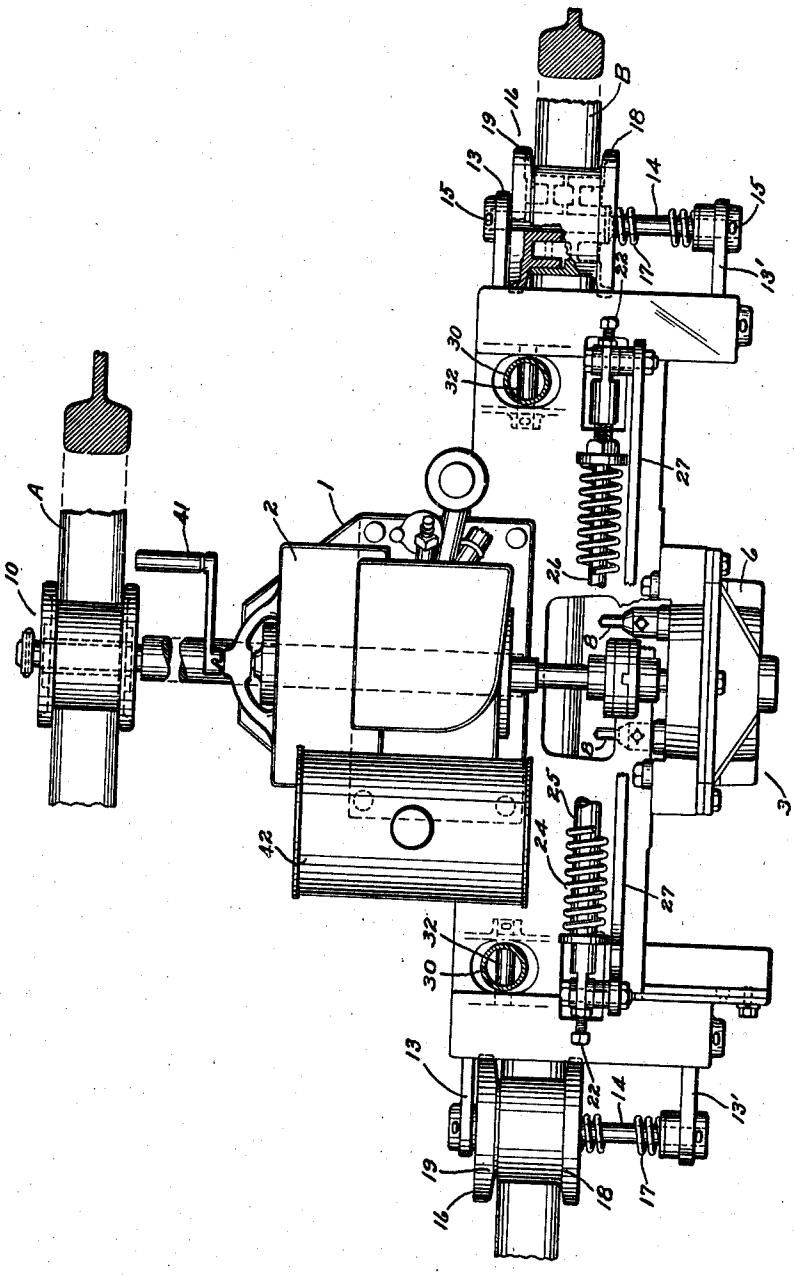


FIG. 1.

Homer P. Chandler
Inventor
by [signature]
Attorney.

Aug. 19, 1941. H. P. CHANDLER 2,253,363

PORTABLE DRILL

Original Filed Nov. 10, 1936 3 Sheets-Sheet 2

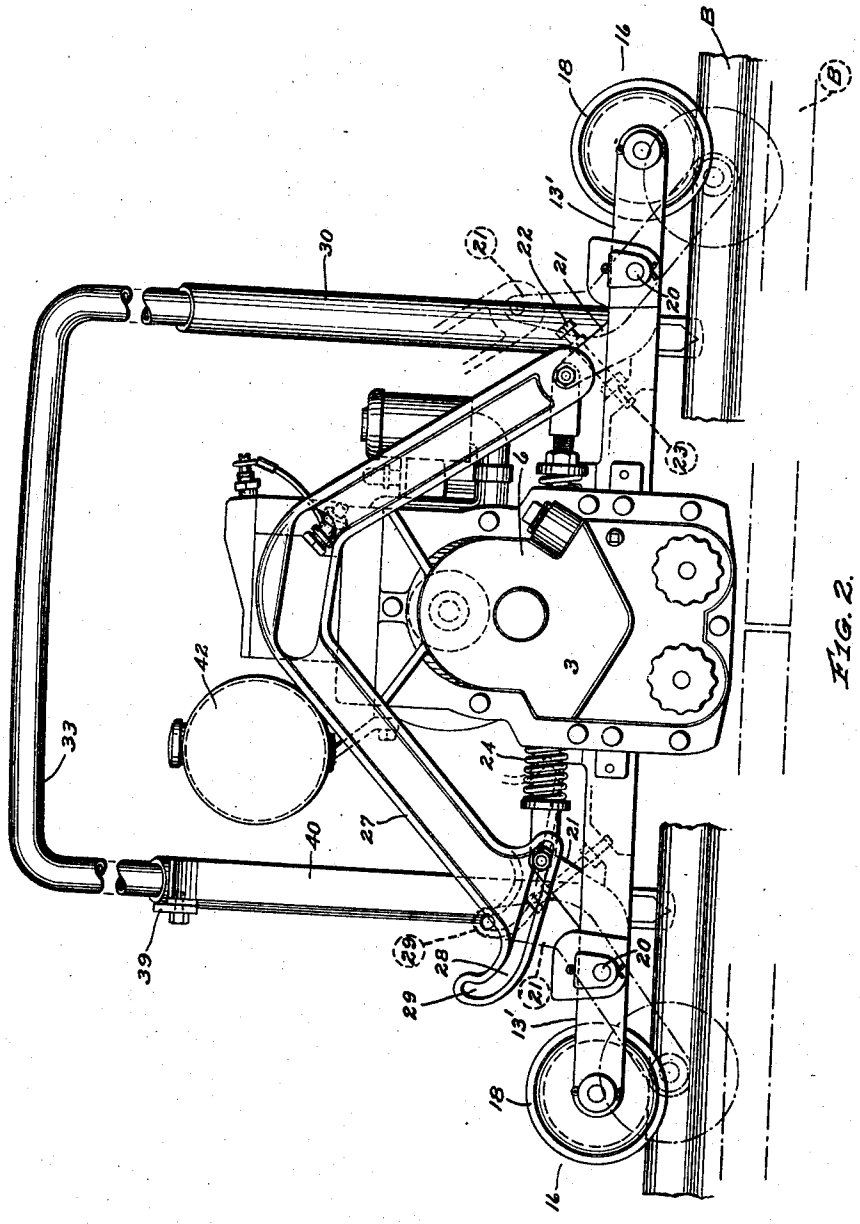


FIG. 2.

Homer P. Chandler
Inventor
by Barnard
Attorney

Aug. 19, 1941. H. P. CHANDLER 2,253,363

PORTABLE DRILL

Original Filed Nov. 10, 1936 3 Sheets-Sheet 3

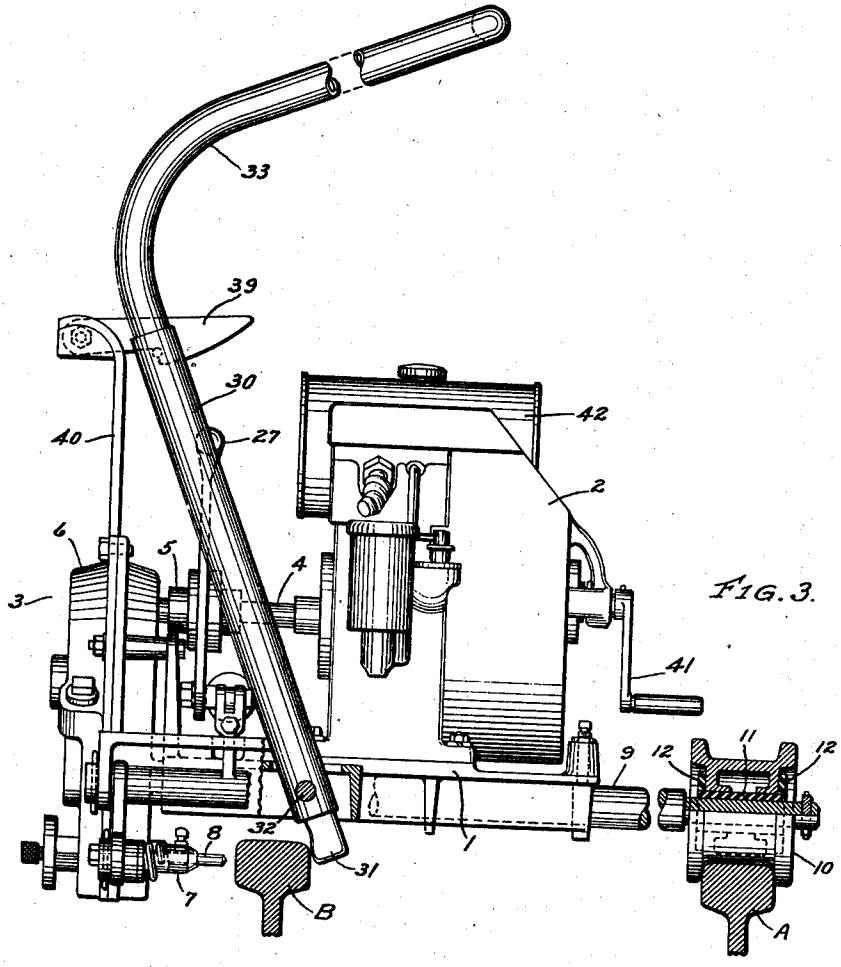


FIG. 3.

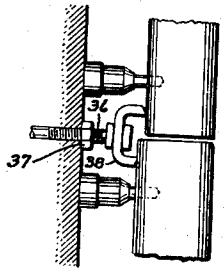


FIG. 5.

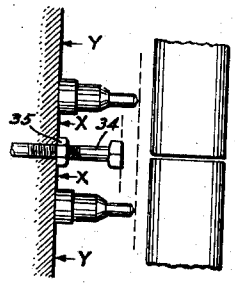


FIG. 4.

Homer P. Chandler
Inventor

by [signature]
attorney.

Patented Aug. 19, 1941

2,253,363

# UNITED STATES PATENT OFFICE

2,253,363

## PORTABLE DRILL

Homer P. Chandler, Mansfield, Ohio, assignor to The Ohio Brass Company, Mansfield, Ohio, a corporation of New Jersey

Original application November 10, 1936, Serial No. 110,123. Divided and this application September 29, 1939, Serial No. 297,140

2 Claims. (Cl. 105—162)

My invention relates to portable drills, and particularly for use for drilling one or more cavities simultaneously in the heads of adjacent rail ends.

One of the objects of my invention is the provision of a machine which can easily be moved along the track and light enough to be quickly removed by the operators when necessary.

Another object of my invention is to provide a drilling machine in which the drills can be quickly raised when passing over switches, crossings and etc.

Another object of my invention is to provide a machine in which the drills may be moved manually relative to the rail when applying the drill thereto.

Another object of my invention is to provide a machine for drilling two or more holes simultaneously in adjacent rail ends, and which holes will be of substantially uniform predetermined depth even in cases where the faces of the rails are not in an exact alignment.

My invention resides in the new and novel construction, combination, and relation of the parts herein described and showed in the accompanying drawings.

In the drawings:

Fig. 1 is a top view of my invention with several of the parts shown in section.

Fig. 2 is a face view of my invention shown in elevation.

Fig. 3 is an end view of my invention with some parts shown in section.

Figs. 4 and 5 are details of guides or gauges for regulating the depth to which the drills may penetrate the rail.

This application is a division of my copending application, Serial Number 110,123, filed November 10, 1936, now Patent No. 2,187,111.

In the preferred embodiment of my invention, I employ a base member 1 upon which is mounted a power plant 2 which I have shown as a gasoline engine, but which may be of other suitable power. Associated with the engine is a transmission 3 connected to the engine by means of the shaft 4 and coupling 5.

The transmission 3 comprises a casing 6 in which is mounted gearing suitable for transmitting motion and power from the engine to the drills and at the speed required.

I am not detailing the gearing as there is nothing new or novel which I claim of the same.

Associated with the gearing are the chucks 7 for holding the drills 8.

Secured to the base or frame 1 is a shaft 9, which has slidably and rotatably mounted upon one end a grooved wheel 10 for operating upon the track rail A.

In order to avoid short circuiting the rails and thus interfering with the proper operation of the signal systems, I insulate the wheel 10 from the axle 9 through the medium of a bushing 11 and washers 12 of insulating materials such as fiber, Bakelite, etc.

To mount the machine upon the other track rail B, I pivotally secure to each end of the machine, and in alignment with the rail, arms 13 and 13'. At the free ends of the arms 13 and 13' is a shaft 14 secured in position by means of the cotters 15. Slidably and rotatably mounted upon each shaft 14 is a roller 16 yieldingly held in the direction of the arm 13 by means of a spring 17.

The roller 16 is composed of two telescopically mounted parts 18 and 19. This construction permits the roller adjusting itself to various sizes of rails and also permits moving the body of the machine transversely of the rail when operating the drills to penetrate the rails.

It will be noted that the spring 17 is constantly pressing the flanges of the parts 18 against one side of the rail B and drawing the flanges of the parts 19 against the opposite face of the rail B and at the same time drawing the entire machine laterally with respect to the rails A and B and bringing the arms 13 into engagement with the part 19 of the rollers 16 which is the normal position of the parts when the machine is not drilling a rail. Thus practically the entire machine, through the medium of the springs 17, is moved and yieldingly held in the direction of that rail which is to be drilled, namely rail B. This means that normally the points of the drill are yieldingly held spaced from the face of the rail which is to be drilled.

The arms 13 and 13' are pivotally mounted on the base or frame 1 by means of the shaft 20. Associated with the arms 13 and 13' is a projecting arm 21, which is provided with a stud 22, the end of which engages a stop nut 23 adjustably mounted on the frame of the machine. The stud 22 is adjustably associated with the arm 21 and regulates the position of the machine body vertically with respect to the rail B. In other words, the studs 22 determine the point at which the drills will enter the rail with respect to the upper and lower surfaces thereof.

Were it not for the fact that the machine may be used where there is special work such as crossings, frogs and etc., it would not be neces-

sary to raise and lower the body of the machine, but on account of such special work it is desirable to have some means of easily and quickly raising the body together with the drills in order to avoid injury thereto when moving the machine through such special work.

Between the arms 21 is a spring 24 mounted upon telescopically arranged members 25 and 26 having their ends pivotally secured to the arms 21. Spring 24 is constantly urging the free ends of the arms 21 to move apart which in turn tends to force the rollers 16 downwardly about the pivots 20 or in other words to raise the body of the machine relative to the rail B. The spring 24 however is not sufficiently strong to raise the machine bodily therefore it is intended at such times as it is desired to raise the machine from its normal drilling position, for the operator to assist the spring by applying manual force sufficient to aid the spring 24. If the springs were sufficiently strong to raise the machine unaided, then it would be necessary to use manual effort to force the machine to its drilling position and provide means to lock it in such position.

In order to hold the machine in the raised position, I employ the toggle arm 27 which is pivoted to one arm 21, and movably secured to the other arm 21 through the medium of the slot 28. When the machine is raised through the efforts of the spring 24 and the operator, the spring will move the arms 21 about the pivots 20 to the positions shown by the dotted lines relative to the machine base. The free end of the arm 21 having the slidable connections with the toggle 27 will come to rest in the curved end 29 of the slot 28 and where it will catch and be held when the operator releases his hold upon the machine, as shown by the dotted position.

In Fig. 2 the full lines show the machine in normal drilling position in respect to the rail B, but Fig. 2 also shows the position of the drilling machine, with respect to the rail B, when the machine has been raised as described.

The normal position of the drills 8 is that shown in Fig. 3, spaced from the face of the rail B. Means is provided for moving the drills into engagement with the face of the rail to be drilled and to move the same as much farther as necessary to drill the holes of the required depth. To effect this movement, I pivot at opposite ends of the body or frame 1 tubular members 30, with one end 31 positioned so as to engage the face of the rail opposite that to be drilled. The pivotal points 32 of the members 30 are placed very low, thus giving a very great leverage in moving the drills while penetrating the rail.

Secured to the upper end of the members 30 is a yoke shaped tubular member or handle 33, by means of which the operator is able to simultaneously move the members 30 as desired. The parts 30—31—32 and 33 are made of very stiff material such that there is no spring under ordinary use and therefore a pull on the part 33 at any point will produce an equal pull on each member 30 and 31; thus the machine body will move parallel to the rails.

The operation of the members 30 through the member 33 is against the tension of the springs 17; the members 14 slide transversely through the rollers 16.

Since the rail head is gripped between the members 18 and 31 as the operator shifts the frame, the frame is held from movement along the rails and no special clamping means is required.

When the operator returns the handle 33 to its inoperative position, the springs 17 move the machine body transversely of the rails to its normal position as shown in Figs. 1 and 3.

It is very important in drilling holes for rail bonds used in electrically connecting the rails, especially where the bond is to be applied in the head of the rail, that such holes shall be of a predetermined depth especially where the bond is of such construction that it depends upon contact with the end wall of the cavity for expansion of the bond terminal.

In Fig. 4, I show a simple means for gauging the depth of the hole which consists of a threaded stud 34 supported by and adjustable relative to the machine and held by means of a lock nut 35. The depth of the hole is gauged by the difference between the projection of the drill points and the stud 34 from the face of the machine. This type of gauge is effective in drilling newly laid rails where the faces of the rails to be drilled are in perfect alignment.

If desired in place of a single stud 34, two studs may be employed, positioned at the points marked $x$ or at $y$. Such gauging is desirable if the members 30 should be arranged to act independent of each other or the entire frame 30—33 arranged to yield under a pull.

In Fig. 5, I show an arrangement for gauging the depth of holes in connection with track that has been laid for sometime, and in which the rails may be somewhat out of alignment. This gauge consists of a stud 36 adjustably mounted on the body of the machine and held by means of a lock nut 37. Adjustably mounted on the stud 36 is a yoke 38 arranged to engage both rails. This form of gauge gives very satisfactory results where the rails are out of alignment, but not too far as it tends to even up the depth of the holes.

In order to hold the handle 30—33 in its inoperative position, I provide a latch 39 secured to a standard 40.

A starting crank for the engine is shown at 41 and a gas supply tank at 42.

Modifications will be apparent to those skilled in the art based upon by disclosures; and therefore, I wish to be limited only by my claims.

I claim:

1. The combination with a machine mounted on rollers and movable along a track of means to raise and lower one end of the machine relative to the track rails in order to raise the machine to avoid obstructions when moving the machine along the track and to lower the machine to its working position, the said means including rollers rotatably mounted on one end of a pair of levers which in turn are pivoted intermediate their ends upon the machine whereby the spacing of the rollers may be decreased thereby raising the machine relative to the rails, the said means also including means to vary the spacing between the rollers and comprising a link pivotally secured to the free end of one of said levers and having a slotted connection with the free end of the other said lever and in which slot the end of the lever slides, the said slot provided with means cooperating with the free end of the lever to lock the rollers from spreading when the machine is in its raised position when an operator moves the link to its raised position, means on the link for the operator to grasp the same and yielding means connecting

the free ends of the levers and tending to force the free ends of the levers apart moving the one lever along the slot to the locking position and thereby assist the operator in raising the link and the machine against the weight thereof.

2. The raising and lowering apparatus for a machine movable long a track and including a frame, in combination with the frame a pair of levers pivotally mounted intermediate their ends upon the frame, a roller rotatably mounted on one end of each lever to engage with a rail of the track, an inverted V-shaped link having a handle to be grasped by an operator in raising and lowering the machine, the link pivotally connected at one end to a free end of one lever and the other end of the link having a slot in which the free end of the other lever is pivotally and slidably mounted, a detent at one end of the slot to cooperate with the pivotal and slidable connection of the lever with the link to hold the machine in its raised position and to release the lever when the link is raised slightly by the operator when it is desired to lower the machine and yielding means positioned between the free ends of the levers constantly urging the free ends of the levers farther apart thereby tending to raise the machine, the force of said yielding means being less than the weight of the machine whereby the machine will lower by gravity when the operator releases the locking means and whereby the operator is assisted in raising the machine.

HOMER P. CHANDLER.