Jan. 1, 1935. F. W. LAENCHER 1,986,678

TAG MARKING MACHINE

Filed June 15, 1933 5 Sheets-Sheet 1

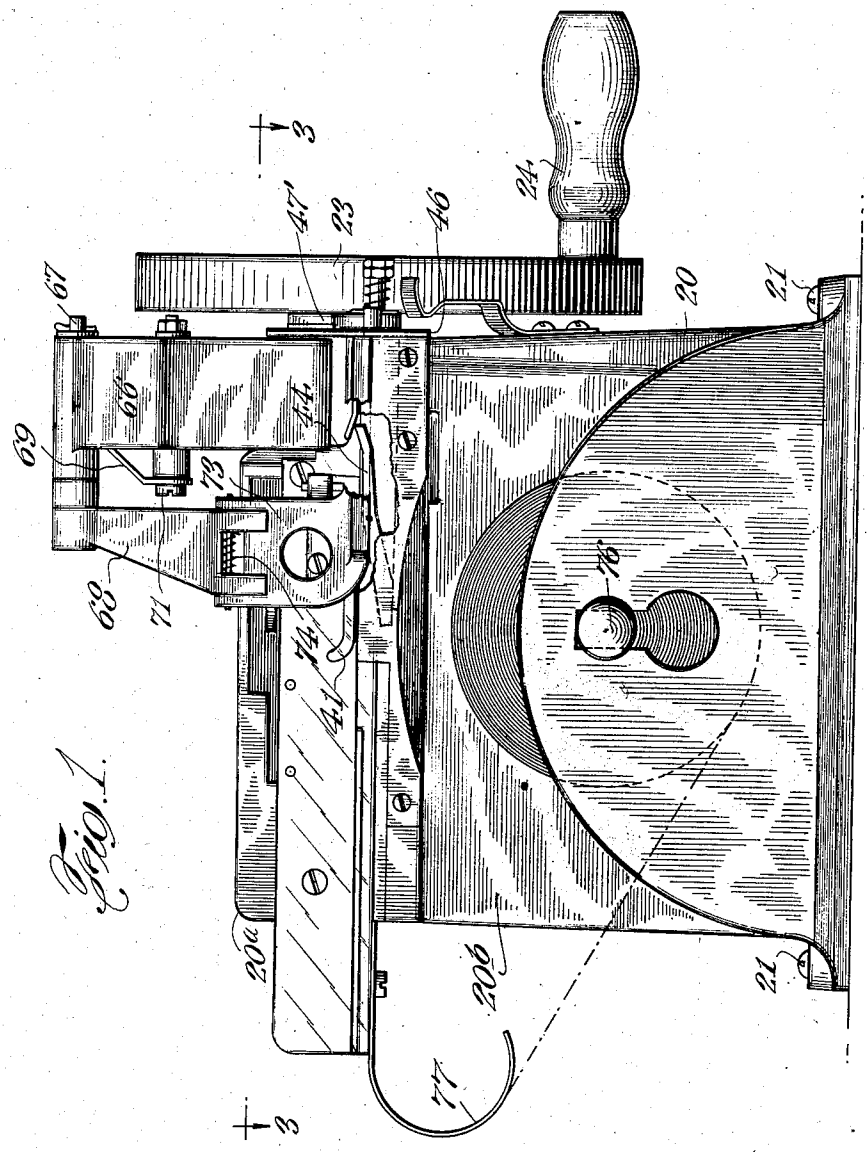

Fig. 1.

INVENTOR
Frederick W. Laencher
BY
Emery, Booth, Varney & Whittemore
ATTORNEY

Jan. 1, 1935. F. W. LAENCHER 1,986,678

TAG MARKING MACHINE

Filed June 15, 1933 5 Sheets-Sheet 2

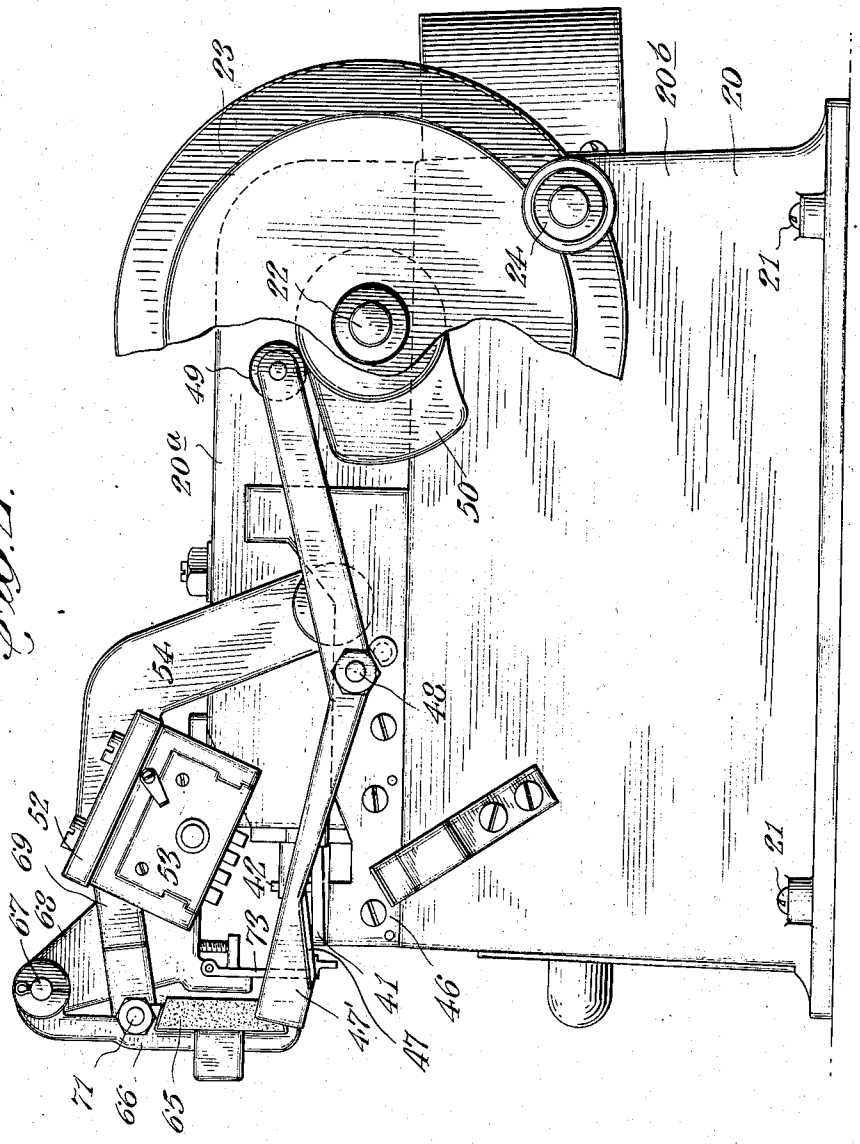

Fig. 2.

INVENTOR
Frederick W. Laencher
BY
Emery, Booth, Vanney & Whittemore
ATTORNEY

Jan. 1, 1935. F. W. LAENCHER 1,986,678

TAG MARKING MACHINE

Filed June 15, 1933 5 Sheets-Sheet 3

Fig. 3.

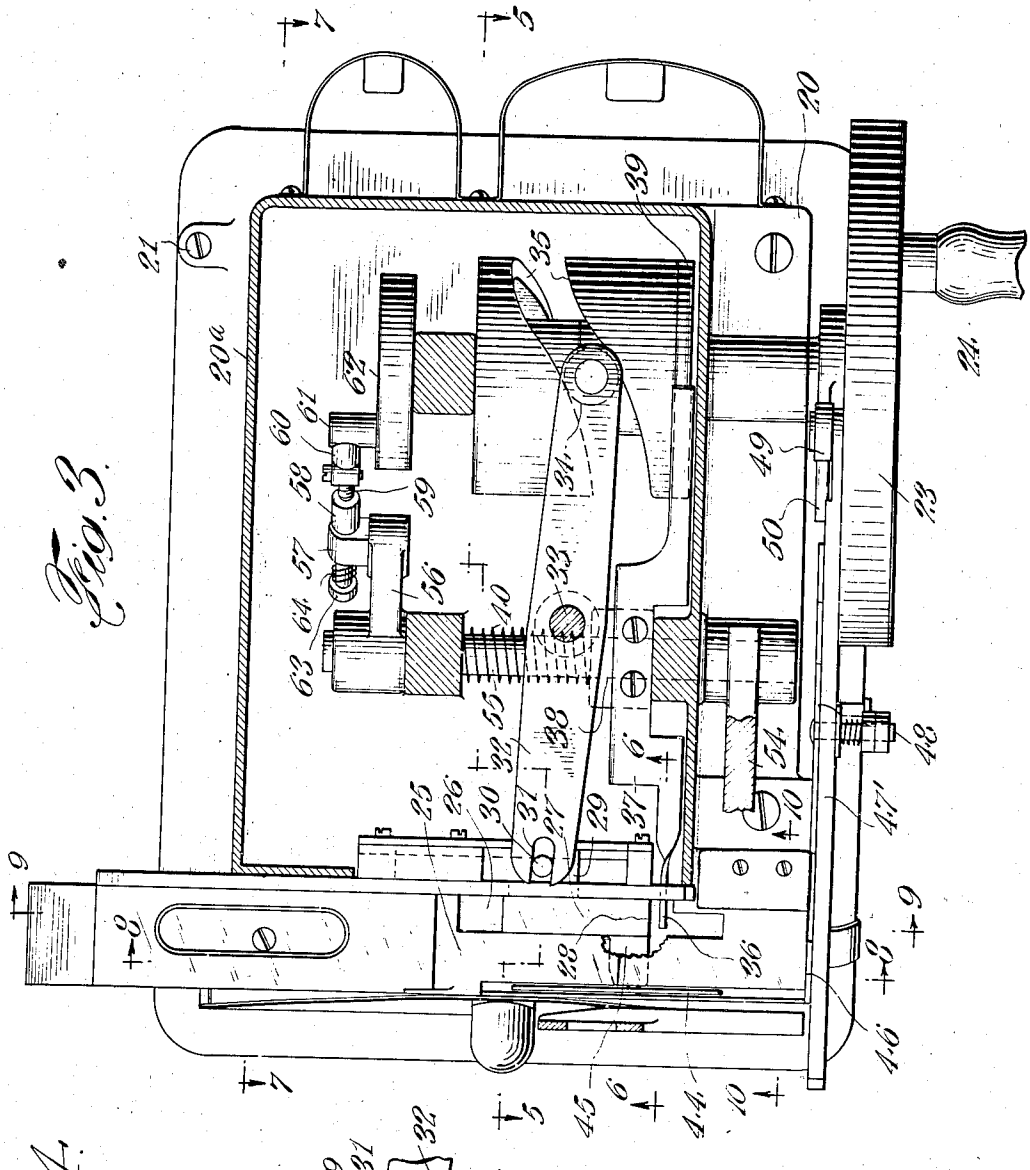

Fig. 4.

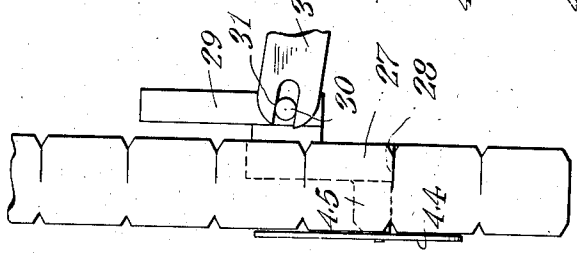

INVENTOR
Frederick W. Laencher
BY Emery, Booth
Varney & Whittemore
ATTORNEY

Jan. 1, 1935. F. W. LAENCHER 1,986,678

TAG MARKING MACHINE

Filed June 15, 1933 5 Sheets-Sheet 4

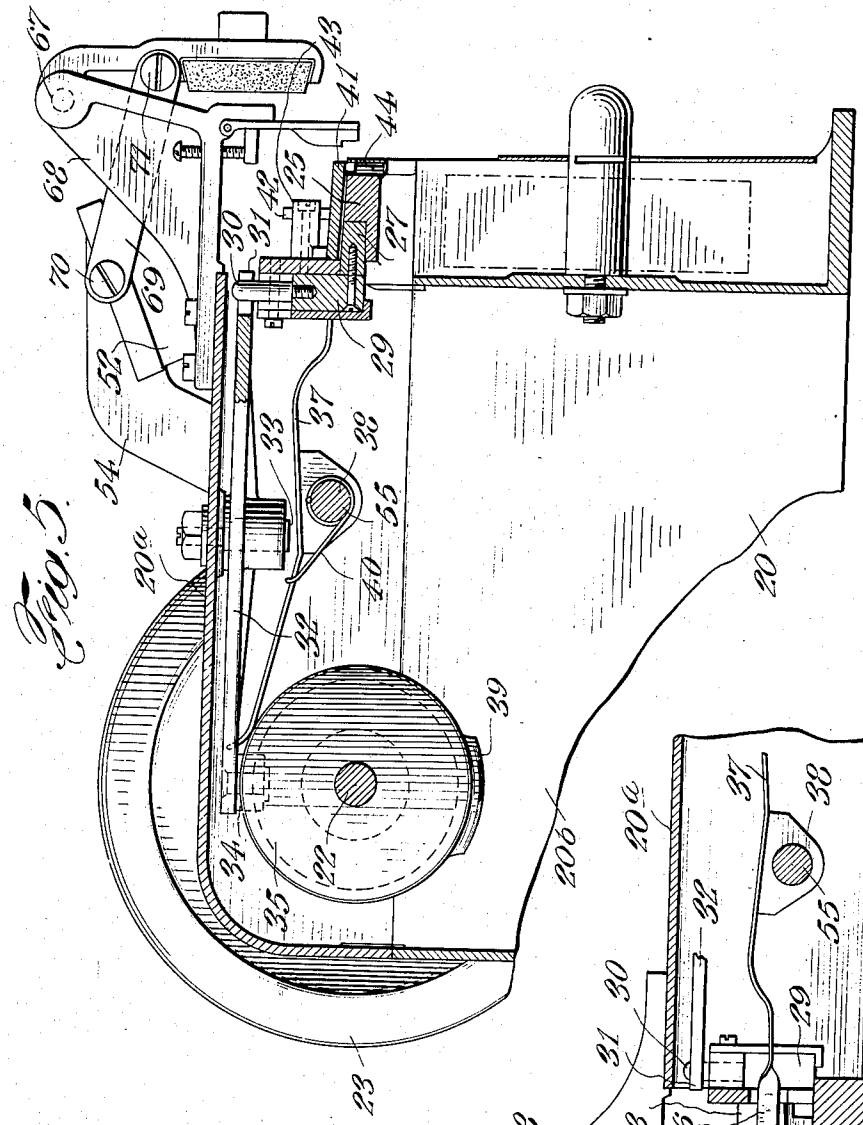

Fig. 5.

Fig. 6.

INVENTOR
Frederick W. Laencher
BY
Emery, Booth, Vanney & Whittemore
ATTORNEY

Jan. 1, 1935. F. W. LAENCHER 1,986,678

TAG MARKING MACHINE

Filed June 15, 1933 5 Sheets-Sheet 5

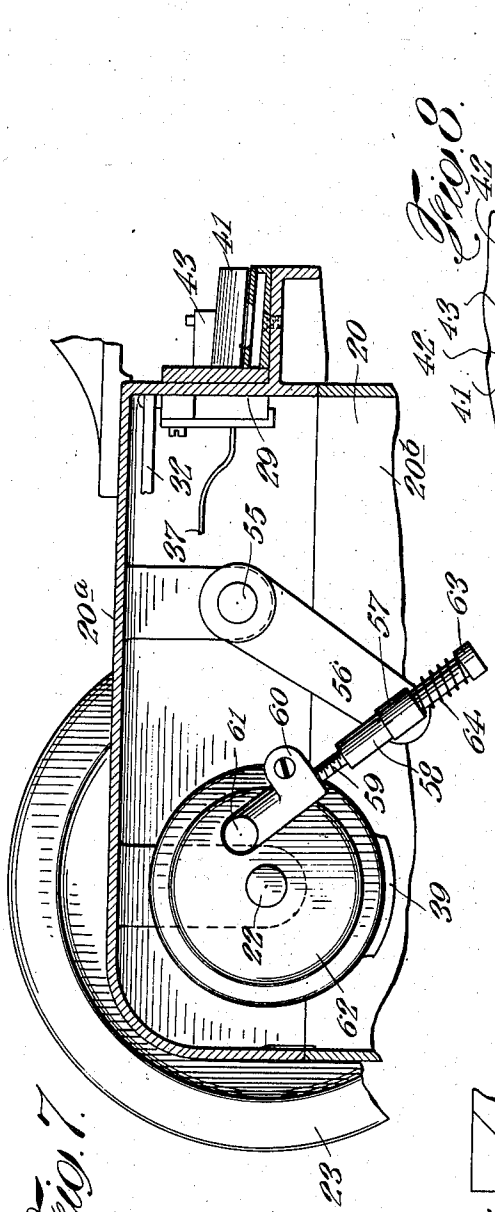

Fig. 7.

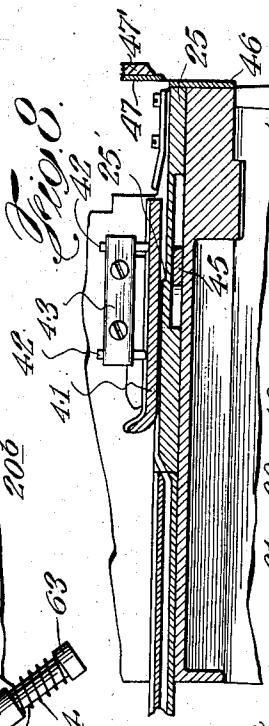

Fig. 8.

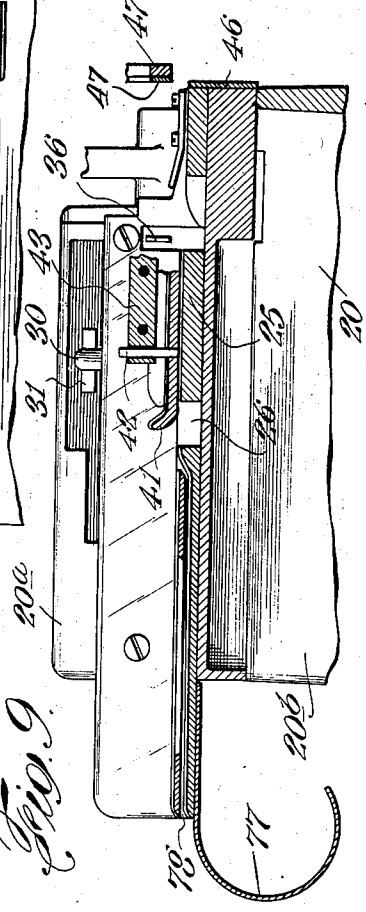

Fig. 9.

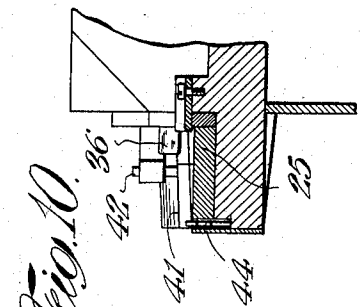

Fig. 10.

INVENTOR
Frederick W. Laencher
BY
Emery, Booth, Vamey & Whittemore
ATTORNEY

Patented Jan. 1, 1935 1,986,678

UNITED STATES PATENT OFFICE

1,986,678

TAG MARKING MACHINE

Frederick W. Laencher, Flushing, N. Y., assignor to A. Kimball Company, New York, N. Y., a corporation of New York

Application June 15, 1933, Serial No. 675,918

6 Claims. (Cl. 271—2.5)

This invention relates to apparatus for feeding and printing strips of price tags, pin tickets and the like.

It is an object of the invention to provide improved mechanisms for feeding the strips of tags step by step, one tag width at a time, and to feed the same into accurate register with the printing head.

Other objects and advantages of the invention will appear hereinafter.

A preferred embodiment of the invention selected for purposes of illustration is shown in the accompanying drawings, in which,

Figure 1 is an end view.

Figure 2 is a side view.

Figure 3 is a top plan view partly broken away.

Figure 4 is a detailed view showing the tag feeding mechanism.

Figure 5 is a section on the line 5—5 of Figure 3.

Figure 6 is a section on the line 6—6 of Figure 3.

Figure 7 is a section on the line 7—7 of Figure 3.

Figure 8 is a section on the line 8—8 of Figure 3.

Figure 9 is a section on the line 9—9 of Figure 3.

Figure 10 is a section on the line 10—10 of Figure 3.

Referring to the drawings, the mechanism is built upon a box-like frame 20 which may be secured to a table or other suitable support by screws 21. All of the moving parts of the machine are carried by the upper portion 20*a* which is secured to the lower portion 20*b* in any suitable manner. A main drive shaft 22 is rotatably mounted toward the rear of the frame 20 and the said shaft may be rotated either by power or by hand, the machine illustrated being intended for hand operation by means of the flywheel 23 and handle 24.

Toward the front of the frame is mounted a platen table 25 along which the strips of tags are fed to printing position as hereinafter described.

The machine is adapted to feed strips of tags which are partially severed by cuts or slits extending inwardly from one edge of the strip, and the tag edges formed by the said cuts or slits are utilized for feeding purposes in the manner hereinafter described. One form of tag strip suitable for use in such machines is illustrated and described in Laencher Patent No. 1,855,765. Another form is that illustrated in Figure 4, and known as gum labels, these strips being also partially severed along the lines A between individual tags.

The rear side of the table 25 is cut away to provide an aperture 26 in which is slidably mounted a reciprocating pusher 27 having its upper face substantially flush with the surface of the table, and having a leading edge 28 adapted to engage the edges of the tags successively in order to feed the strip along the table one tag width at a time. The said pusher 27 is connected to a slide 29 mounted to reciprocate on the frame 20*a* and the said slide is provided with a pin 30 which extends upwardly into engagement with the bifurcated end 31 of a lever 32 which is pivotally mounted at 33. The rear end of the said lever is provided with a roller 34 which cooperates with the cam 35 mounted on the main drive shaft 22, the said cam being shaped to oscillate the lever 32 and thereby to reciprocate the slide 29 and pusher 27.

Mounted above the aperture 26 is a finger 36 which is adapted to engage the rear edges of the tags successively to depress the same below the surface of the table and into position for engagement by the pusher 27. The said finger moves up and down in a vertical plane, being operated by the lever 37, of which it forms an integral part, which is pivotally mounted on the frame at 38. The rear end of the said lever engages the cam 39 mounted on the main shaft 22 and is held in yielding engagement therewith by means of the spring 40. The cams 35 and 39 are so shaped and timed that the finger 36 moves downwardly to engage the rear edge of the tag during part of the retractive movement of the pusher 27, but as the pusher moves forward in its feeding stroke, the finger 36 rises out of engagement with the said tags so as to permit the same to be fed. In the meantime, however, the corner of the tag to be engaged has been deflected sufficiently so that the tag edge remains exposed for engagement by the leading edge of the pusher. If desired, the surface of the table 25 may be offset slightly, as indicated at 25′ in order to accommodate the depressed tag edge, and thereby increase the certainty of engagement by the pusher.

In order to prevent regression of the tag strip during the return stroke of the pusher 27, means are provided for frictionally engaging the strip to hold it in the position to which it is advanced by the pusher. Such means may preferably comprise a presser foot 41 resting on the tag strips and held in position by two guide fingers 42 which are loosely mounted in apertures in the block 43 secured to the frame.

As will be observed, the edge 28 of the pusher 27 moves only to a position one tag length from the right-hand edge of the table 25, and it is desirable, therefore, to provide means for eject-

ing the last tag of the strip from the table. For this purpose, a finger 44 is provided which is pivotally connected to the member 45 which extends beneath the table and is connected to and moves with the pusher 27, the said finger being so located that it engages the trailing edge of the last tag of the strip in order to push the last tag off the table.

In machines of this type it is desirable to provide a cutting knife to complete the severance of individual tags after the same have been printed. Accordingly, a knife 47 is provided which cooperates with a hardened shear plate 46 attached to the frame. The knife 47 is preferably mounted on a lever 47' pivoted to the frame at 48 and the rear end of the said lever is provided with a roller 49 which cooperates with cam 50 secured to the main drive shaft 22. The said cam is so shaped and timed as to cause the knife to be depressed immediately following the end of the feeding stroke of the pusher, and to permit the knife to rise again prior to the next feeding stroke.

The printing head 52, carrying the removable type chase 53 is secured to the arm 54 which is secured to the rock shaft 55. In order to oscillate the printing head, an arm 56 is secured to the rock shaft 55 and this arm is connected by lug 57 to sleeve 58 which slides on rod 59. One end of said rod is threaded into a crank pin sleeve 60 mounted on crank pin 61 secured to disk 62 which is secured to the drive shaft 22. The other end of the rod is provided with a head 63 and between this head and the sleeve 58 is mounted a coil spring 64.

This construction provides for resilient movement or give of the parts when the printing head engages a ticket and compensates for different thicknesses of tickets without danger of breaking the operating parts and with approximately the same printing pressure on the tags.

Cooperating with the printing head 52 is a swingable inking pad 65 mounted in the head 66 pivoted on the shaft 67 carried by the bracket 68. The head 66 is operated to cooperate with the printing head by a link 69 which is pivotally connected with the printing head and the head 66 by pivot pins 70 and 71 respectively.

The strips of tags are guided along the table 25 by means of a guide member 73 which is pivotally mounted on the bracket 68 and is biased rearwardly by torsion spring 74. The said guide member 73 is provided with a groove 75 to engage the edge of the strip to hold it in proper feeding position.

The machine is adapted to feed strips of tags of relatively short determinate length, as for instance, a strip of twelve tags, and is also adapted to feed longer strips of indeterminate length. In the case of the shorter strips, the operator merely lays the strip on the platen table in position for engagement by the feed mechanism and the strip is fed one tag length at a time as previously described. In the case of the longer strips, these are usually wound in the form of a roll which may be mounted on the axle 76, and the end of the strip may be threaded around the curved guide 77 and through the guide slot 78 into position for engagement by the feed mechanism.

It will be understood that the invention may be variously modified and embodied within the scope of the subjoined claims.

I claim as my invention:

1. In a tag marking machine, in combination, a table, said table having an opening therein, a reciprocating pusher mounted in said opening, said pusher having its upper surface substantially flush with the surface of said table and having a leading edge adapted to engage said tags to feed the same, a reciprocating finger mounted above said opening and adapted to engage said tags successively to depress them below the surface of said table into position for engagement by said pusher, a main operating shaft, a cam and lever operated by said shaft to reciprocate said pusher, a second cam and lever operated by said shaft to reciprocate said finger, said parts being timed in such manner that said finger engages said tags while said pusher is retracted and disengages said tags as said pusher advances to feed the tag strip.

2. In a tag marking machine, in combination, a table, said table having an opening therein, a reciprocating pusher mounted in said opening, said pusher having its upper surface substantially flush with the surface of said table and having a leading edge adapted to engage said tags to feed the same, a reciprocating finger mounted above said opening and adapted to engage said tags successively to depress them below the surface of said table into position for engagement by said pusher, and means to operate said parts in timed relationship such that said finger engages said tags while said pusher is retracted and disengages said tags as said pusher advances to feed the tag strip.

3. In a tag marking machine, in combination, a table, means to engage said tags successively to feed the strip along the table one tag width at a time, a reciprocating finger to engage said tags successively to deflect them out of the plane of the strip and into position for engagement by said feeding means, and means to operate said parts in timed relationship such that said finger engages said tags while said feeding means is retracted and disengages said tags as said pusher advances to feed the tag strip.

4. In a tag marking machine, in combination, a table, said table having an opening therein, a reciprocating pusher mounted in said opening, said pusher having its upper surface substantially flush with the surface of said table and having a leading edge adapted to engage said tags to feed the same, and means positively operated in timed relation to said pusher to depress the corner of the tag to be engaged out of the plane of the strip and into position for engagement by said pusher.

5. In a tag marking machine, in combination, a table, an aperture in said table, means located below said table within said aperture to engage said tags successively to feed the strip along the table one tag width at a time, and means positively operated in timed relation to said feeding means to depress the corner of the tag to be engaged by said feeding means below the surface of the table and into position for engagement by said feeding means.

6. In a tag marking machine, in combination, a table, means to engage said tags successively to feed the strip along the table, and means positively operated in timed relation to said feeding means to deflect the corner of the tag to be engaged by said feeding means out of the plane of the strip and into position for engagement by said feeding means.

FREDERICK W. LAENCHER.