J. NORTHROP.

PITMAN FOR LOOMS.

APPLICATION FILED AUG. 25, 1911.

1,068,443.

Patented July 29, 1913.

Fig. 1.

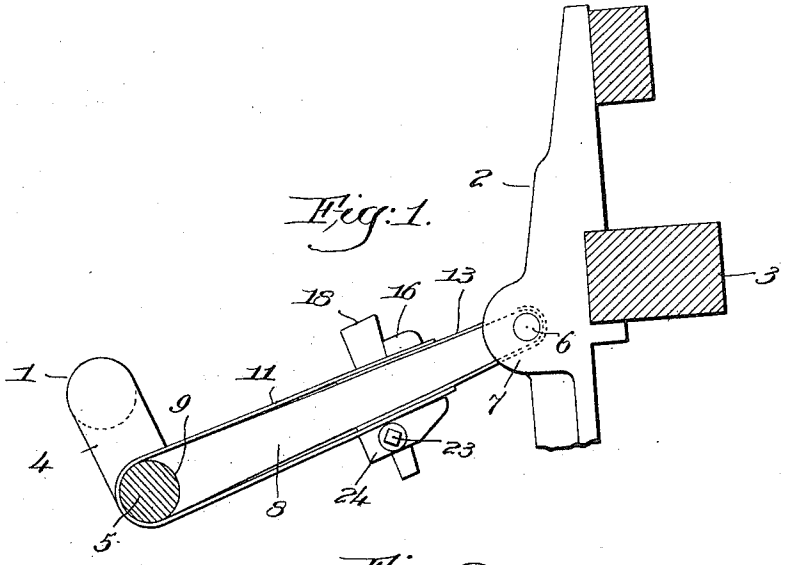

Fig. 2.

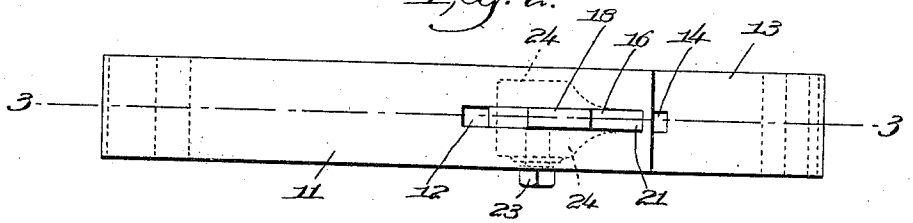

Fig. 3.

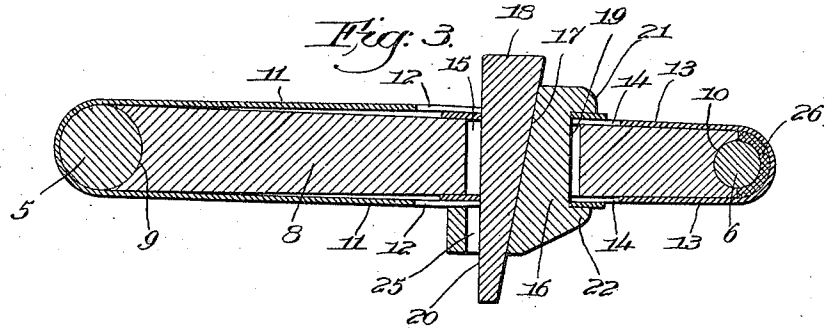

Witnesses,
Edward F. Allen.
Warren O'Neil.

Inventor,
Jonas Northrop,
by Robt. P. Hains.
Atty.

UNITED STATES PATENT OFFICE.

JONAS NORTHROP, OF HOPEDALE, MASSACHUSETTS, ASSIGNOR TO DRAPER COMPANY, OF HOPEDALE, MASSACHUSETTS, A CORPORATION OF MAINE.

PITMAN FOR LOOMS.

1,068,443. Specification of Letters Patent. Patented July 29, 1913.

Application filed August 25, 1911. Serial No. 646,026.

To all whom it may concern:

Be it known that I, JONAS NORTHROP, a citizen of the United States, residing at Hopedale, in the county of Worcester and State of Massachusetts, have invented an Improvement in Pitmen for Looms, of which the following description, in connection with the accompanying drawings, is a specification, like letters on the drawings representing like parts.

The invention to be hereinafter described relates to looms and more particularly to the means for connecting the crank shaft operatively with the lay.

As well understood by those skilled in the art, it is desirable that the means, such as a pitman, for transmitting the motion of the crank shaft to the lay, shall have the element that imparts the thrust or forward movement of the crank to the lay formed of non-metallic substance, such as wood, and especially is this the case in high speed looms on account of the ease of action incident to the effect of coöperation between metal and wood and lightness of parts which obviates undue strain in the change of directional movement with consequent economy in power consumption. Difficulty has been experienced in adapting a non-metallic or wooden pitman to this use by reason of the lack of suitable means for connecting and holding the metal bands or straps which pass about the crank pin and lay pin. Attempts have heretofore been made to solve the difficulty, as by passing a wedge through slotted end portions of the straps or bands and a perforation in the wooden or non-metallic pitman, such wedge being driven to place to pull the bands or straps tightly about the crank and lay pins, and then holding it in this position by a bolt passing through one side of the wooden or non-metallic pitman. This has not proven practical because the bolt soon works loose in the non-metallic or wooden pitman, and the parts separate with obviously objectionable results.

With the above general matters in view the aims and purposes of the present invention are to provide means whereby the advantages of the wooden or non-metallic thrust element of the pitman may be secured and at the same time the straps or bands passing about the crank and lay pins may be caused to properly seat said pins in the end portions of the wooden or non-metallic thrust element and securely maintain the parts in adjusted position; all as will hereinafter more fully appear in connection with the accompanying drawing showing one form of means for carrying the invention into practical effect, the invention in its true scope being definitely set forth by the claims.

In the drawing:—Figure 1 is a side view of sufficient portions of a loom to make clear the association of the present invention therewith, parts of the lay and crank pin being shown in section; Fig. 2 is a top or plan view of the parts shown by Fig. 1, omitting the lay and crank shaft; and Fig. 3 is a section on the line 3—3 of Fig. 2.

The crank shaft 1 may be supported in the usual bearings, not shown, and the lay 2 may comprise the usual lay swords carrying the lay beam 3 and usual adjuncts, which being well understood by those skilled in the art need not be further described, it being understood that the lay, however mounted and equipped, is to be reciprocated or moved back and forth by the crank shaft 1 operated from any usual or desired means. The crank shaft 1 is provided with a crank arm 4, Fig. 1, having a crank pin 5, and the lay is provided with a pin 6, which for identification may be known as the lay pin, mounted or held in suitable lugs or brackets 7.

Extending between the crank pin 5 and lay pin 6 is the part 8 of a pitman, which part may, for identification, hereinafter be termed the thrust element. The thrust element 8 is formed of non-metallic substance, such as wood and has a seat 9 formed in one end to receive and partially embrace the crank pin 5, and at its opposite end it may be provided with a similar seat 10 for the lay pin 6. This non-metallic or wooden thrust element is held in position with the crank and lay pins in the end seats thereof by means of suitable metal straps passing about the crank and lay pins, and drawn and held in operative position by wedging means, devices being provided whereby when the wedging means has properly drawn the parts into desired relation, it may be permanently and securely locked, all as will presently appear in connection with the illustrated form of the invention. Passing longitudinally of the non-metallic or wooden thrust member and about the crank pin 5 is

a metal strap 11, the end portions of which are provided with openings or slots 12. Similarly extending about the lay pin 6 is a metal strap 13 having the end portions thereof provided with openings or slots 14, the lengths of said straps being such that when assembled as indicated in Fig. 3, the slotted end portions thereof may overlap. The non-metallic or wooden thrust element 8 is provided with an opening 15 through which and the openings in the overlapping ends of the straps 11 and 13 extends a wedge holding member 16 having an incline or wedging surface 17 to co-act with a similar incline on a wedge 18, likewise passing through the slotted end portions of the straps 11 and 13 and the opening 15 in the thrust member, the construction being such that upon forcing the wedge to place, as indicated in Fig. 3, the straight edge 19 of the wedge holding member 16 will engage the end walls of the slot in one strap, while the straight edge 20 of the wedge will engage the end walls of the slot in the other strap and draw said straps tightly about the crank and lay pins, as will be apparent.

In a construction wherein wedging means is employed in connection with a wooden or non-metallic thrust member, difficulty is found in holding the wedging means in place after the parts are driven or forced to desired position, because any fastening means that depends for its locking character upon the substance of the non-metallic or wooden thrust member, such as a set screw or bolt passing through the thrust member, is unreliable in use and soon loosens to such an extent as to impair the operation of the pitman. To overcome this objection the present invention contemplates means on the wedge holding member to maintain it in proper position and connections between the wedge holding member and the wedge for locking the latter in place, so that the wedge holding member being unerringly maintained in position, it follows that the wedge locked thereto will likewise remain fixed. As one means to this end the wedge holding member 16 is provided with holding lips 21 and 22 which respectively engage the end portions of one of the straps, as for instance, strap 11, at each side of the thrust member, so that said wedge holding member cannot move to cause disengagement of itself from the pitman when the parts are assembled and the wedge 18 is driven to place; and a locking device connects the wedge to the wedge holding member, with the result that until the locking device is disengaged, both the wedge and wedge holding member remain fixed.

One form of locking connection between the wedge and wedge holding member comprises a set screw 23 passing through one of the base flanges 24 of the wedge holding member and engaging the side of the wedge, as indicated in Figs. 1 and 2. In providing the base flanges 24, the base portion of the wedge holding member is preferably enlarged and provided with an opening 25 through which the end of the wedge 18 may pass, Fig. 3, the construction being such that the wedge may be forced to place to draw the straps 11 and 13 properly about the crank and lay pins, whereupon the set screw 23, carried by the metal wedge holding base may be set up to maintain the parts in desired position.

From the construction described it will be apparent that notwithstanding the non-metallic character of the thrust member, means are provided to effectively maintain the wedge in adjusted position, and that by loosening the locking device 23 at any time the wedge may be manipulated to tighten the straps 11 and 13 and then set up again to securely hold the wedge in place without the objectionable dangers that ensue when the wedge is attempted to be locked by means depending for its locking capacity upon the relatively soft character of the non-metallic thrust member.

If desired, a leather or other soft or non-metallic piece may be inserted between the lay pin and strap, as indicated at 26, Fig. 3.

Obviously, changes may suggest themselves in some of the details shown as one embodiment of the invention, but I believe I am the first to provide a loom pitman with a wooden or non-metallic thrust member and end straps with wedging means for drawing and holding the straps and thrust member in operative relation wherein the wedging means is locked in position by self-contained devices substantially as pointed out by the claims.

What is claimed is:—

1. A pitman comprising a non-metallic thrust member having a seat at each end and an opening between its ends, pins adapted to be received by said seats to connect driving and driven parts, straps for holding the non-metallic thrust member in engagement with said pins, said straps having overlapping slotted ends, a wedge passing through the opening of the non-metallic thrust member and overlapping slotted ends of the said straps, a wedge holder also passing through the opening of the non-metallic thrust member and overlapping ends of said straps and provided with a head portion extending longitudinally of the non-metallic thrust member and bearing upon one of said straps at opposite ends of the said opening, said wedge holder having an enlarged base portion provided with a passage way for the smaller end of the wedge, said base portion having its forward end and side flanges bearing upon one of the straps at the front and sides of the opening in the thrust mem-

ber, and means passing through a side flange of said base portion and engaging the side of the wedge.

2. A pitman comprising a non-metallic thrust member having a seat at each end and an opening between its ends, pins adapted to be received by said seats to connect driving and driven parts, straps for holding the non-metallic thrust member in engagement with said pins, said straps having overlapping slotted ends, a wedge passing through the opening of the non-metallic thrust member and overlapping slotted ends of the said straps, a wedge holder also passing through the opening of the non-metallic thrust member and overlapping ends of said straps and provided with a head portion extending longitudinally of the non-metallic thrust member and bearing upon one of said straps at opposite ends of the said opening, said wedge holder having an enlarged base portion provided with a passage way for the smaller end of the wedge, said base portion having its forward end and side flanges bearing upon one of the straps at the front and sides of the opening in the thrust member, and a set screw threaded transversely through a side flange of said base portion opposite the wedge to clamp the wedge to the wedge holder.

In testimony whereof, I have signed my name to this specification, in the presence of two subscribing witnesses.

JONAS NORTHROP.

Witnesses:
WM. O. PERKINS,
E. D. OSGOOD.

Copies of this patent may be obtained for five cents each, by addressing the "Commissioner of Patents, Washington, D. C."