C. B. DAVIS.

FOLDING SHIPPING CRATE.

APPLICATION FILED OCT. 24, 1916.

1,254,482.

Patented Jan. 22, 1918.

2 SHEETS—SHEET 1.

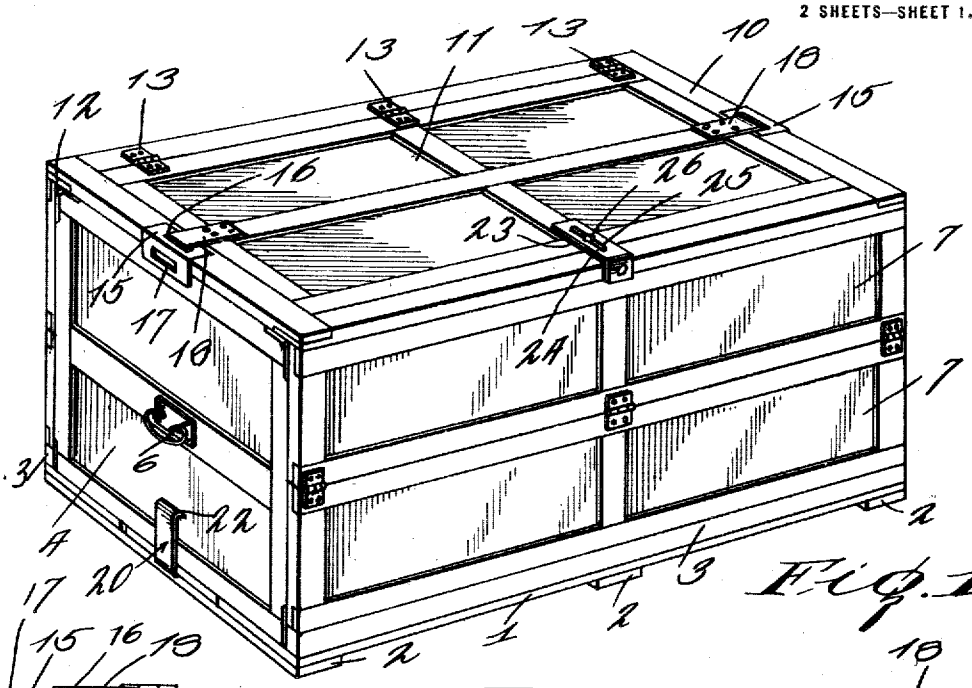

Fig. 1.

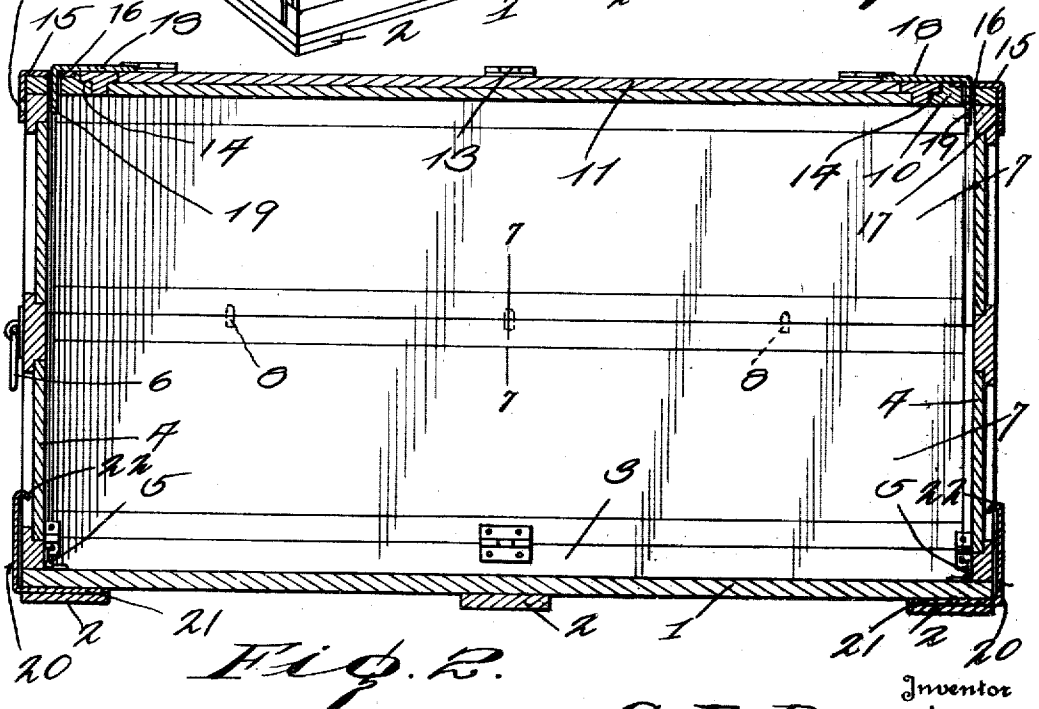

Fig. 2.

Witnesses

B. F. Bram

Inventor

C. B. Davis

By

Attorneys

C. B. DAVIS.

FOLDING SHIPPING CRATE.

APPLICATION FILED OCT. 24, 1916.

1,254,482. Patented Jan. 22, 1918.

2 SHEETS—SHEET 2.

Fig. 3.

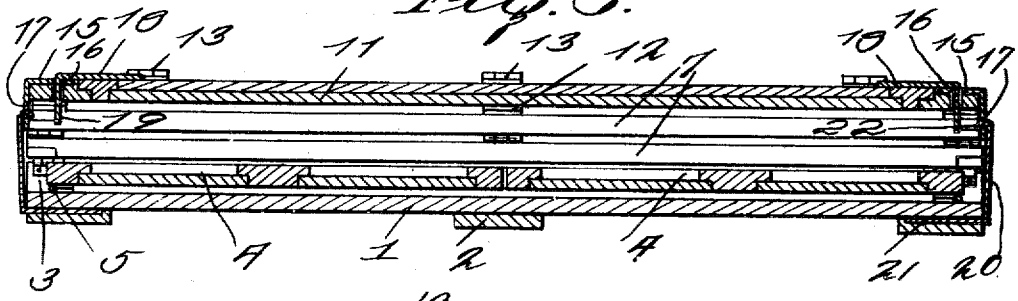

Fig. 4.

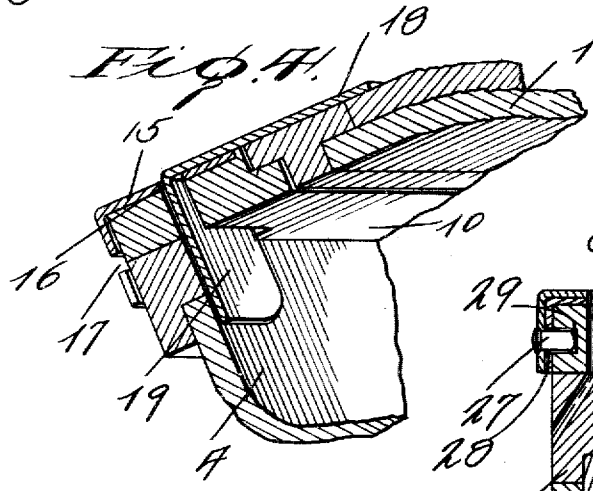

Fig. 6.

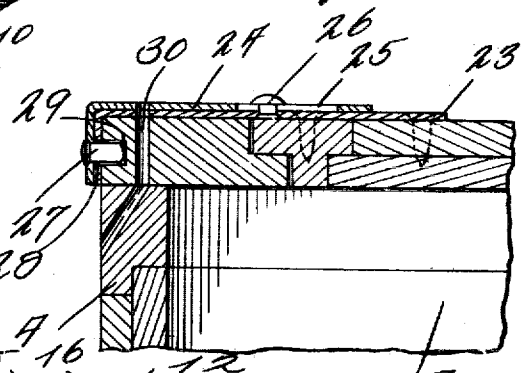

Fig. 7.



Fig. 5.

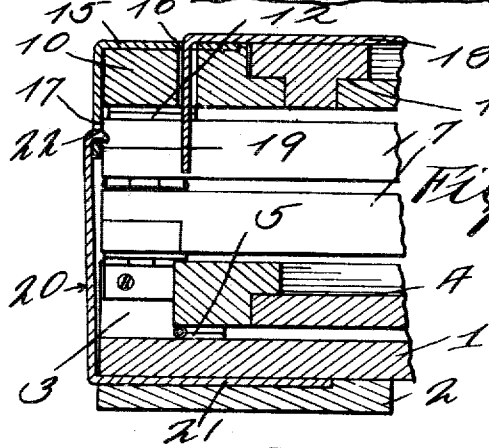

Inventor

C. B. Davis

Witnesses

B. G. Brann

Edmund R. Whitman

By [signature]

Attorneys

UNITED STATES PATENT OFFICE.

CLAUDE B. DAVIS, OF RICHMOND, VIRGINIA, ASSIGNOR OF ONE-THIRD TO OSBOURN WATTSON AND ONE-THIRD TO MICHAEL J. DACY, BOTH OF RICHMOND, VIRGINIA.

FOLDING SHIPPING-CRATE.

1,254,482. Specification of Letters Patent. Patented Jan. 22, 1918.

Application filed October 24, 1916. Serial No. 127,457.

To all whom it may concern:

Be it known that I, CLAUDE B. DAVIS, a citizen of the United States, residing at Richmond, in the county of Henrico, State of Virginia, have invented certain new and useful Improvements in Folding Shipping-Crates; and I do hereby declare the following to be a full, clear, and exact description of the invention, such as will enable others skilled in the art to which it appertains to make and use the same.

This invention relates to folding shipping crates and more particularly to knock-down boxes or crates for shipping bakers' produce.

The object of this invention is to provide a shipping crate which will meet the demands of shippers for a collapsible or knock-down receptacle in which perishable products, such as bread, or other bakery products may be safely and equitably transported, while being so completely a collapsible article that it may be returned to the original point of shipment, not only at a minimum expense, but with the greatest degree of safety from wear and tear. It has become a very considerable factor in the business of bakeries to ship their products by rapid transportation means, to surrounding localities and adjacent cities, and for this purpose, light but strongly manufactured crates or baskets have been employed. These, however, require a large amount of space for their return, as much, in advance as when being shipped with contents, since it is impossible to nest them. The present invention, therefore, avoids the disadvantages and impractical features of the known methods of shipment, as I have been acquainted with them, by constructing a box in which the sides, the bottom and the top may be compactly folded into close contiguity, so that the folded boxes not only require a small amount of space for their return but are so compacted that the danger of their being crushed or twisted out of shape is reduced to a minimum.

In connection with the above invention, it is more particularly the object to provide a peculiar form of mechanism for locking the parts in extended position, and also a means for operating with the forementioned locking mechanism for holding the device in collapsed position.

It is likewise a particular object to construct a collapsible crate in which the lid is disposed inside of the four edges of the top, so as to hold or close inside of the marginal portion of the latter and also within the same plane therewith, and furthermore to provide in connection with the lid and the top an improved form of hasp or securing device.

With the above and other objects in view, and such as will hereinafter appear, my invention will now be fully set forth and described, reference being had to the accompanying drawing.

In the drawings:

Figure 1 is a perspective view of the box or crate set up,

Fig. 2 is a vertical longitudinal section through the box when set up,

Fig. 3 is a vertical longitudinal section through the box when the latter is collapsed,

Fig. 4 is a detail sectional perspective view of the means for locking the box in its set-up state,

Fig. 5 is an enlarged detail section showing the parts illustrated in Fig. 4 when employed to lock the crate in collapsed position,

Fig. 6 is a detail transverse section taken through the top of the box and showing the cover securing device, and

Fig. 7 is a section on line 7—7 of Fig. 2.

Referring more particularly to the drawings, 1 indicates the bottom of the box or crate which is built up upon a suitable plurality of transverse cleats 2. Secured upon the upper face of the bottom 1 along the longitudinal edges thereof is the pair of bars or beadings 3, and between the latter, at the ends of the bottom 1 are hingedly mounted the end pieces 4. The end pieces 4 are preferably formed of paneled material, so that the box or receptacle may be made as light as possible without any sacrifice of the requisite strength, this paneled construction also avoiding any possible warping of the end pieces. The end pieces 4 are hinged to the bottom 1 at their lower inner edges, as by the hinges 5, and may be swung thereupon downwardly against the upper face of the bottom 1 so as to lie wholly below and between the beadings 3. Handles 6 secured to the outer faces of the ends 4 provide a suitable means for carrying the box, when the latter is set up, and also a means for elevating the ends from collapsed to set-up position.

Mounted upon the upper edges of the bars or beadings 3, are the sectional sides 7 which consist of upper and lower sections equal in length to the length of the box, and each comprising a paneled structure of the same type as the end pieces 4. The upper sections are hinged to the lower sections, so that they will break inwardly in folding, and the lower edges of the lower sections are hinged to the upper inner edges of the beadings 3 so that in folding, the lower sections will fall upon the exposed sides or faces of the end pieces 4. Thus, the sides 7, in the process of collapsing the box, break upon the longitudinal median line, so that the upper and lower sections thereof fold one upon the other, and the folded sides fall upon the end pieces so as to leave sufficient space therebetween for the handles 6. In order to impart an additional degree of rigidity to the sides 7 in their extended position, a series of dowel pins 8 (Fig. 7) is inserted in the upper edge of each of the lower sections of the sides, and is adapted to be received in a corresponding series of openings 9 provided in the lower edges of the upper side sections.

The upper side sections support a top frame 10 to which is hinged the cover or lid 11. The frame 10 is constructed in any suitable manner to closely overlie the upper edges of the ends and sides when the latter are extended or set up, and is hinged to the sides by means of hinges 12 which have their leaves secured to the lower face of the frame 10 and the inner faces of the sides, respectively, so that when the sections of the sides are collapsed inwardly, the frame 10 may be let down upon the inner faces of the upper side sections and will eventually lie in a plane parallel to the bottom 1 and the inwardly folded end pieces 4.

The lid or cover 11 is mounted upon the frame 10 by means of hinges 13 secured to the upper surfaces of the elements 10 and 11, the lid or cover 11 resting upon a ledge 14 formed continuously around the inner edge of the frame 10. Following the construction of the sides and end pieces, the lid 11 is also a paneled structure, and when folded or closed, lies wholly within the plane of the frame 10.

In order to lock the box or receptacle into set up position, the following devices are provided. Secured to the end members of the frame 10, preferably at middle points, are the right angular plates 15 whose horizontal leaves completely overlie the width of the end pieces of the frame, and are provided with the longitudinal slots 16 which correspond or register with similar slots formed entirely through the end members of the frame 10. The vertical leaves of the plates 15 extend downwardly over the sides of the frame 10, and are carried therebeyond, to form stops for the end pieces 4 when the latter are swung into vertical position in setting up the box. The extended portions of the vertical leaves are also longitudinally slotted as at 17, for a purpose which will hereinafter appear. As best indicated in Fig. 4, the lid 11 is provided at its ends with right angular plates 18 which are secured to the upper surface of the lid and extend beyond its side edges to terminate in the vertical leaves 19 which extend through the slots 16 when the lid is closed, and are of such length that they pass beyond the lower surface of the frame 10 and into engagement with the inner surfaces of the end pieces 4 when the latter are set up. Therefore, when the lid is closed the leaves 19 pass the slots 16 and the corresponding slots in the frame 10, to hold the ends in vertical position as long as the lid is closed. To release the ends, the lid must first be opened to remove the leaves 19 from their contact with the inside face of the ends. In this manner it is evident that the end pieces 4 will hold the sides 7 in extended position, and that the ends will be held in vertical position by having their upper edges engaged between the vertical sides of the plates 15 and the lower ends of the leaves 19.

Secured between the bottom boards and the transverse cleats 2 are the spring latches 20 (Fig. 5), the latter consisting of the base plates 21 by means of which the latches are secured and the vertical spring arms which terminate at their upper ends in the inturned lips 22. When the box is collapsed, the lips 22 snap into engagement with the slots 17 formed in the vertical leaves of the plates 15, the upper surfaces of the lips 22 being beveled in order to permit them to ride by the lower edges of the plates 15 when the frame 10 is carried downwardly into engagement with the collapsed sides.

In Fig. 6 is illustrated a means for locking the lid in its closed position. Mounted upon the upper surface of the lid 11 is a plate 23 which extends thence forwardly over the frame 10 and has its forward end bent downwardly to overlie the front edge of the latter. Slidable upon the plate 23 is a similarly shaped plate 24 which is carried by the plate 23 through a pin and slot connection 25, 26. Secured to the forward down turned end of the plate 24 is a bolt 27 which extends inwardly therefrom and is adapted to pass through an opening 28 in the down turned end of the plate 23 and into engagement with a recess 29 formed in the edge of the frame 10. Thus, by sliding the plate 24 rearwardly, relative to the plate 23, the lid may be locked to the frame 10, thereby completely closing the box. In order to permit the sealing of the box, an opening 30 is passed through the frame 10, the forward side 7 and the plates 23 and 24,

the sealing wire being thus given a passageway to securely seal the contents of the box against unauthorized inspection.

Upon the foregoing description, it is evident that I have invented a thoroughly practical collapsible crate for shipping purposes, and while the operation of the device is obvious from the foregoing description, it should be noted that the devices which I have provided for securing the box in its elevated position and also in its collapsed position perform these functions with the least possible number of parts, and in a manner which permits of the readiest release of the parts from either their set up or collapsed position. As far as is practical the same elements are utilized to lock the box in its collapsed and set up position, and cooperate to provide in the most practical manner known to me a crate which meets the demand which has been hereinbefore described.

What I claim as my invention is:—

1. A collapsible crate, comprising in combination, a bottom, end pieces hinged upon the bottom to fold inwardly thereupon, sectional sides secured to the bottom in position to collapse inwardly upon the end pieces in parallel relation thereto, a top frame hinged across the sides, a cover hinged to close within the top frame, and means carried by the cover and top frame to embrace the sides of the end pieces when the crate is set up.

2. A collapsible crate, comprising in combination, a bottom, end pieces hinged upon the bottom to fold inwardly thereupon, sectional sides secured to the bottom in position to collapse inwardly upon the end pieces in parallel relation thereto, a top structure hinged across the sides and including a lid, stop plates extending downwardly from the ends of the top, to provide abutments for the end pieces when extended, and means carried by the lid and extending through the top in relation to bear against the inner faces of the end pieces and hold the latter in extended position when the lid is closed.

3. In a collapsible crate, the combination with a bottom, a top structure including a frame and a cover hinged thereto, and an inwardly folding end, of a stop plate extending downwardly from the top frame to form an abutment for the end, said downwardly extending plate having a longitudinal slot located below the edge of the top, an element carried by the cover to coöperate with said stop plate to lock the end in open position, and a spring latch plate carried by the bottom and extending upwardly to lock into said slot when the end is collapsed and the top is brought into folded relation to the bottom.

4. In a collapsible crate, the combination with a bottom, a top structure and an inwardly folding end, of a lock plate extending downwardly from the edge of the top, to provide a stop for the outer face of the end in its extended position, said plate having a slot formed therein below the top, a plate extending through the top in parallel relation to the lock plate to bear against the inner face of the end when the latter bears against the lock plate, the last mentioned plate being displayed when the box is opened, and a latch plate carried by the bottom and extending upwardly to lock into said slot when the end is collapsed and the top is brought into folded relation to the bottom.

5. In a collapsible crate, the combination with a bottom, a top structure and inwardly folding ends, said top structure consisting of a top frame and a cover carried thereby, and means carried by the cover and top frame to embrace the sides of the end pieces when the crate is set up.

6. In a collapsible crate, the combination with a bottom, a top structure and an inwardly folding end, said top structure consisting of a top frame and a cover carried thereby, a stop plate extending over the end of the frame to overlie its top and extend downwardly beyond its edge to provide abutments for the end, when the latter is extended, said stop plate having a slot in each of its horizontal and vertical elements, a plate carried by said cover to enter the slot in the horizontal element of the stop plate when the cover is closed and engage the inner side of the end, and a latch plate on the bottom to engage the slot in the vertical element of the stop plate when the crate is folded.

In testimony whereof, I affix my signature, in the presence of two witnesses.

CLAUDE B. DAVIS.

Witnesses:
GEO. H. CHANDLEE,
J. WATTSON.

Copies of this patent may be obtained for five cents each, by addressing the "Commissioner of Patents, Washington, D. C."