Jan. 11, 1927. 1,614,214

O. STEINER

MEANS FOR SUPPORTING AND DRIVING FILMS

Filed March 20, 1924

Fig. 1.

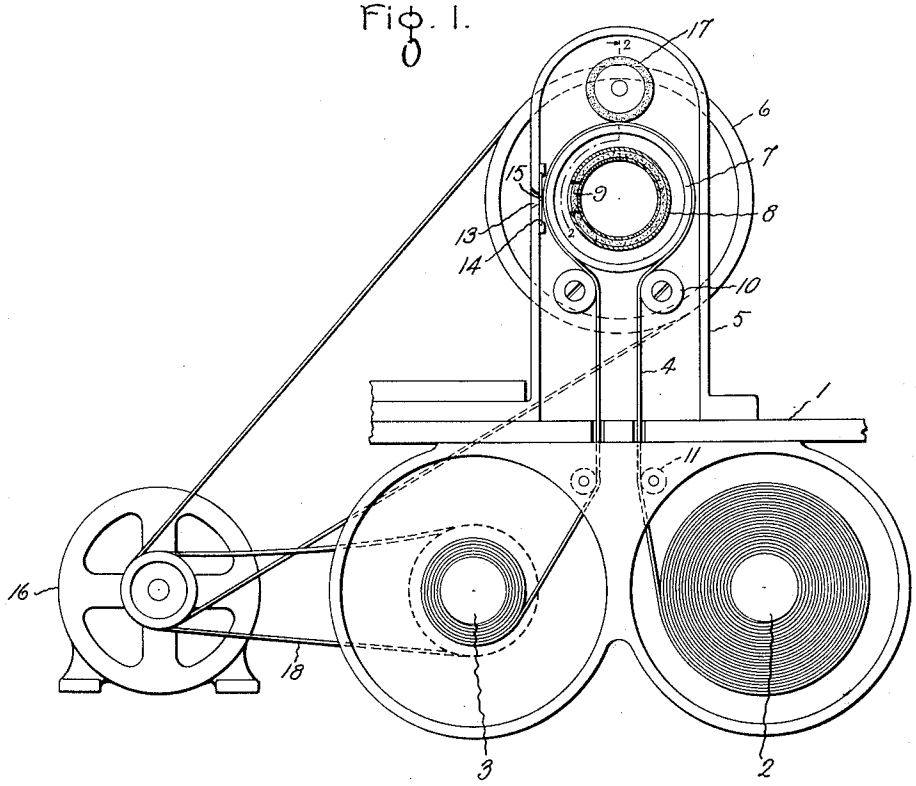

Fig. 2.

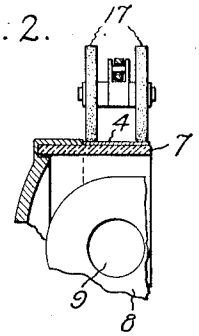

Fig. 3.

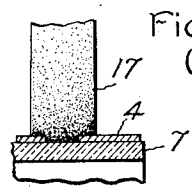

Inventor:
Oscar Steiner,
by Alexander S. Lint.
His Attorney.

Patented Jan. 11, 1927. 1,614,214

UNITED STATES PATENT OFFICE.

OSCAR STEINER, OF PHILADELPHIA, PENNSYLVANIA, ASSIGNOR TO GENERAL ELECTRIC COMPANY, A CORPORATION OF NEW YORK.

MEANS FOR SUPPORTING AND DRIVING FILMS.

Application filed March 20, 1924. Serial No. 700,732.

My invention relates to that class of mechanism in which a photographic strip or film is caused to move past a screen having an opening through which light rays may pass to the film and an object of my invention is to provide an improved means for supporting the film and giving it a uniform movement close to the screen.

It is well known that films bearing moving picture records are fed through the motion picture machines in common use in an intermittent manner, the necessary movement being communicated to the film by means of toothed wheels which engage in a series of openings extending along each margin of the film. When a sound record has been made upon the film it has been found most expedient to move the film at a substantially uniform rate and consequently when the record is to be reproduced the film should again be moved at a uniform rate. It has been found that where the film bearing the sound record was moved through the sound reproducing apparatus by the usual toothed wheel means the reproduced record was accompanied by an objectionable sound which was attributed to a vibration given to the film by the teeth of the driving wheels engaging in the openings in the film. In accordance with my invention I effect a uniform movement of the film by causing it to engage the periphery of a smooth driving pulley. The pulley is constructed with a true cylindrical surface so that the film in lying snug against the surface can be caused to run very close to a light screen without actual contact therewith. For increasing the adhesion of the film to the cylinder and to prevent possible slipping of the film, I provide one or more idlers to bear against that portion or portions of the film having the usual sprocket wheel openings, the surfaces of the idlers being of relatively soft material so that those portions coming opposite the openings in the film may push through and engage the surface of the drive pulley.

My invention will be better understood from the following description taken in connection with the accompanying drawing, and its scope will be pointed out in the appended claims.

In the drawing, Fig. 1 is a side view of a construction illustrating an embodiment of my invention; Fig. 2 is a fragmentary cross sectional view drawn to a larger scale and taken on the line 2—2 of Fig. 1; and Fig. 3 is a fragment of Fig. 2 drawn to a still larger scale.

Referring to the drawing, a frame 1 provides bearings for the two film reels 2 and 3, the film 4 being wound from the former to the latter during the operation of the machine.

The upright portion 5 of the frame 1 forms a bearing for a shaft (not shown) carrying the pulley 6 and a cylinder 7 of transparent material, preferably glass. Within the cylinder 7 is located the photoelectric cell 8 having a window 9 for receiving light rays. The outer surface of the cylinder 7 is made true and concentric with the axis of rotation and on this surface rests the film 4 the same being driven by the cylinder. Idlers 10 and 11 are shown for causing the film to engage as large a proportion of the circumference of the cylinder as is practicable and to direct the film through suitable openings in the frame 1. At a point opposite the window 9 of the photoelectric cell the frame 5 is provided with an opening 13 behind which is shown a screen 14. This screen has a narrow slit 15, preferably about 1 mil in width, arranged transversely of the film through which light from a suitable source (not shown) may pass to the cell 8 under the control of the moving film.

For driving the cylinder 7 and the film thereon past the screen 14, I have shown the electric motor 16 belted to the pulley 6 which with the cylinder 7 is rotatably mounted in suitable bearings (not shown). Suitable speed governing means are preferably employed to insure a uniform speed of the motor drive and to further assist in obtaining uniformity of speed particularly in avoiding sudden irregularities, the pulley 6 may be given a relatively large mass.

In order that there may be sufficient traction between the glass cylinder 7 and the film 4, which may be the standard celluloid film commonly employed in the production of moving pictures, I have provided a pair of idlers 17 having tires of soft material such as rubber which are arranged to bear against opposite margins of the film and press it firmly against the cylinder. Advantage is taken of the two marginal rows of sprocket wheel apertures with which

standard films are provided in that portions of the soft tires of the idlers 17 push through those apertures to the cylinder surface beneath, see Fig. 3, and in so doing constitute in effect driving teeth, the adhesion between rubber and glass being much greater than that between celluloid and glass. For rotating the winding pulley 3 to take up the film as it comes from the driving cylinder 7 the motor 16 is shown connected to the pulley 3 by a belt 18. This belt, however, is loose and the ratio of the diameter of the pulley on the motor to that of the pulley on the reel 3 is so chosen that the reel 3 always tends to run faster than is needed and the belt is constantly slipping. This feature being no part of my invention and being well known in the moving picture art will not be described further.

It is essential with a device of this nature that the film pass very close to the screen 14 but to prevent scratching of the film it is important that the film shall not have frictional contact with the screen or with any guiding means which might scratch its surface. By the use of my device the film can be made to pass with the desired closeness to the screen and at the same time avoid contact with anything which might scratch it. Moreover, by causing the film to be driven through the glass cylinder 7 and the cooperating idlers a positive movement free from slippage is obtained in a simple manner and without the disadvantages arising from the use of sprocket wheel drives.

While I have described only one embodiment of my invention, I do not wish to be limited to the particular form shown and described as it will be apparent that many modifications therein may be made without departing from the scope of my invention as set forth in the appended claims.

What I claim as new and desire to secure by Letters Patent of the United States is:

1. In a device of the character described, a screen having an opening therein, a rotatable cylinder over which a continuous length of film is adapted to pass arranged opposite said opening, and means for holding the film snugly against the cylinder as it passes thereover including a member arranged to engage simultaneously the film and the cylinder.

2. In a device of the character described, a screen having a narrow opening therein, reels adapted to carry a photographic film, a transparent cylinder for supporting and moving said film in close proximity to said screen at said opening and a photoelectric cell arranged within said cylinder adapted to be affected by light rays passing through said opening and said film.

3. In a device of the character described, a screen having a narrow transverse opening therein, a glass cylinder for supporting and moving a photographic film past the opening in said screen, a winding reel and an unwinding reel for said film, a photoelectric cell within said glass cylinder, and means for rotating said cylinder and said winding reel.

4. In a device of the character described employing a photoelectric film, driving means for said film comprising a pair of wheels between which said film passes, one of said wheels having a soft, resilient peripheral surface, adjacent portions of which simultaneously engage said film and the surface of said other wheel.

5. In a device of the character described employing a film having a series of marginal apertures therein, means for moving said film, said means comprising a pair of wheels between which said film passes, one of said wheels having a smooth resilient surface, portions of which are adapted to project through said apertures into contact with the other wheel.

6. In a device of the character described employing a film having a series of marginal apertures therein, a cylinder for supporting and moving said film, means for rotating said cylinder and means for preventing said film from slipping on said cylinder comprising a roller having a soft, resilient surface adapted when pressed against said film to push through said apertures and engage the surface of said cylinder.

In witness whereof, I have hereunto set my hand, this 14 day of March, 1924.

OSCAR STEINER.

Certificate of Correction.

Patent No. 1,614,214, granted January 11, 1927, to

OSCAR STEINER.

It is hereby certified that error appears in the printed specification of the above-mentioned patent requiring correction as follows: Page 2, line 76, claim 4, for the word " photoelectric " read *photographic;* and that the said Letters Patent should be read with this correction therein that the same may conform to the record of the case in the Patent Office.

Signed and sealed this 22d day of February, A. D. 1927.

[SEAL.]

M. J. MOORE,
Acting Commissioner of Patents.