Feb. 20, 1934. D. HAVILAND 1,948,174

DUAL ADJUSTABLE LOCK

Filed June 15, 1932 3 Sheets-Sheet 1

Fig. 1.

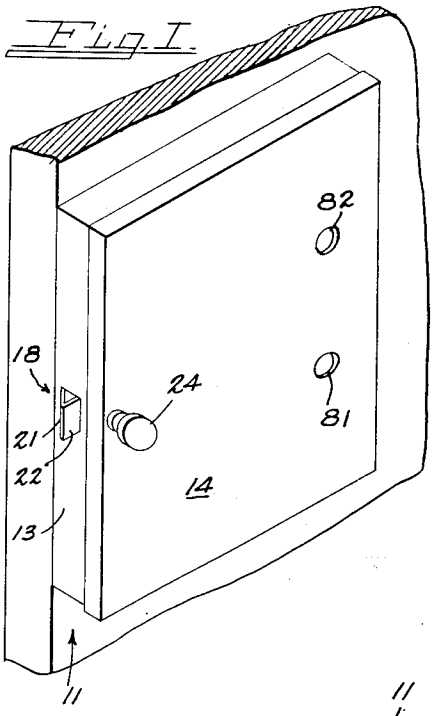

Fig. 2.

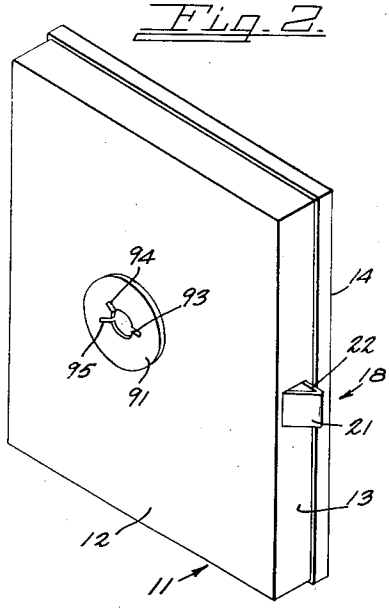

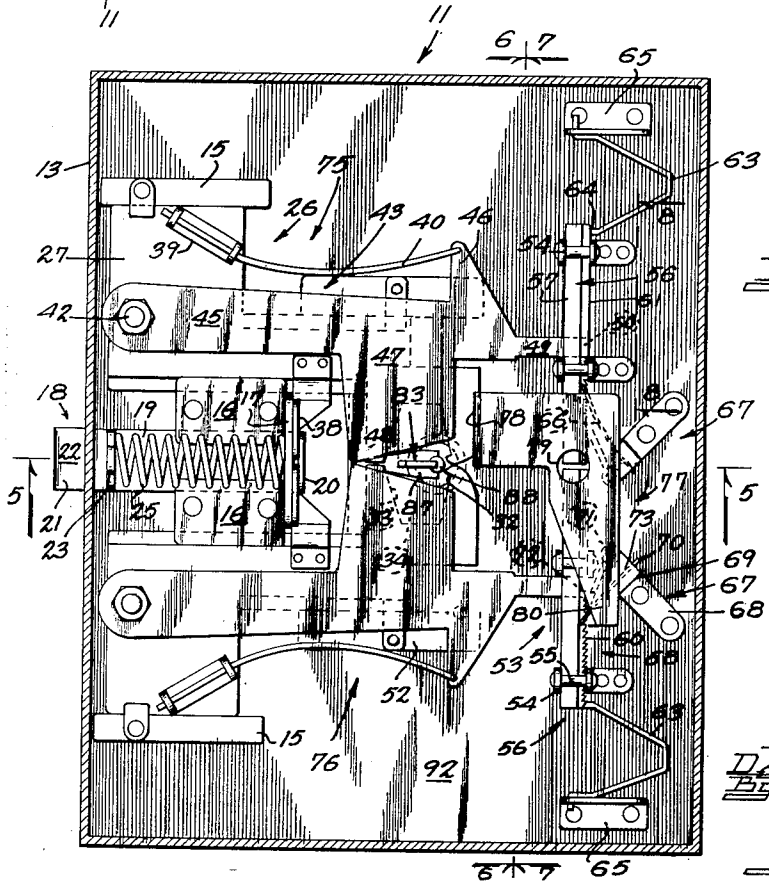

Fig. 3.

INVENTOR.
DANIEL HAVILAND
BY Hazard and Miller
ATTORNEYS.

Feb. 20, 1934. D. HAVILAND 1,948,174

DUAL ADJUSTABLE LOCK

Filed June 15, 1932 3 Sheets-Sheet 2

Fig. 4.

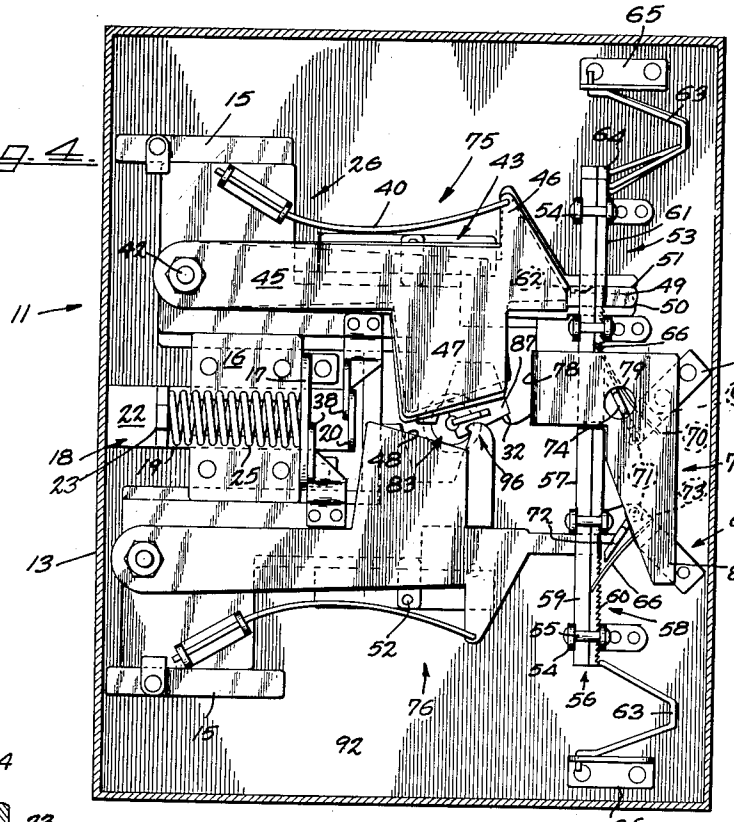

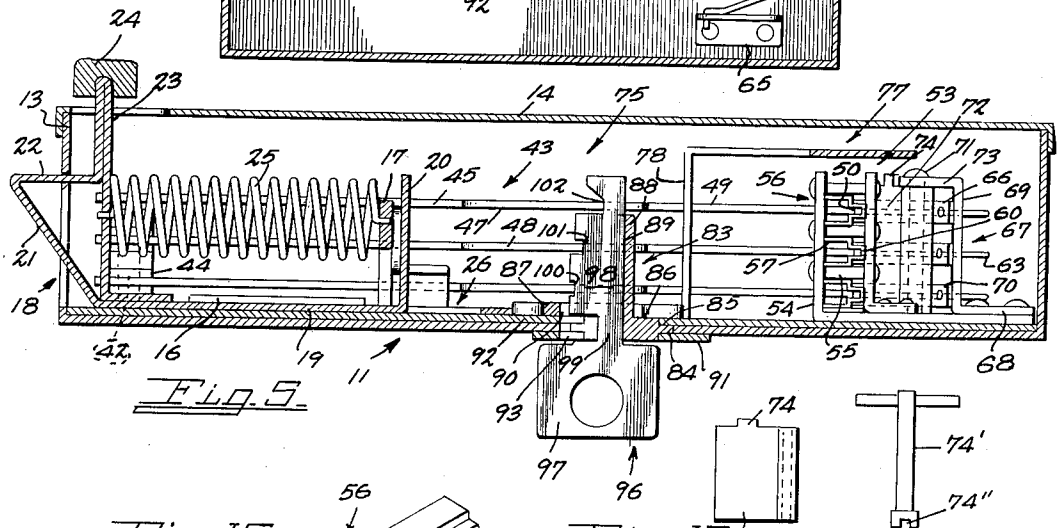

Fig. 5.

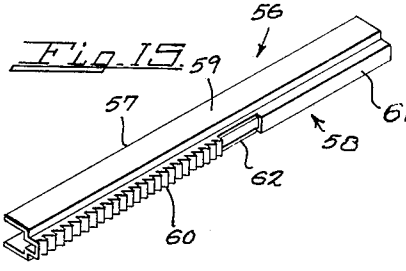

Fig. 15.

Fig. 13.

Fig. 14.

INVENTOR.
DANIEL HAVILAND,
BY Hazard and Miller
ATTORNEYS.

Feb. 20, 1934. D. HAVILAND 1,948,174

DUAL ADJUSTABLE LOCK

Filed June 15, 1932 3 Sheets-Sheet 3

Fig. 8.

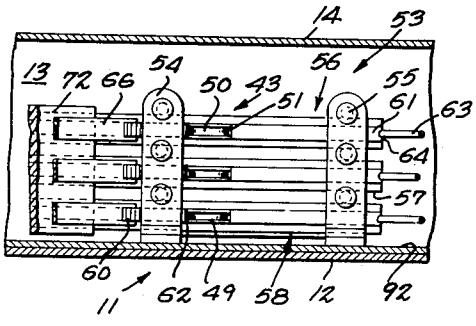

Fig. 9.

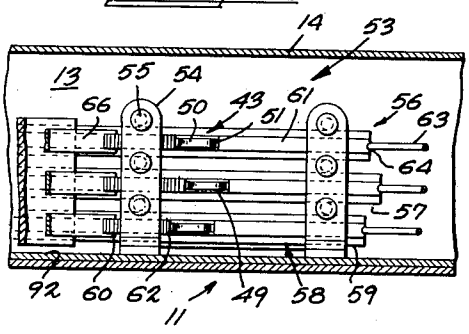

Fig. 7.

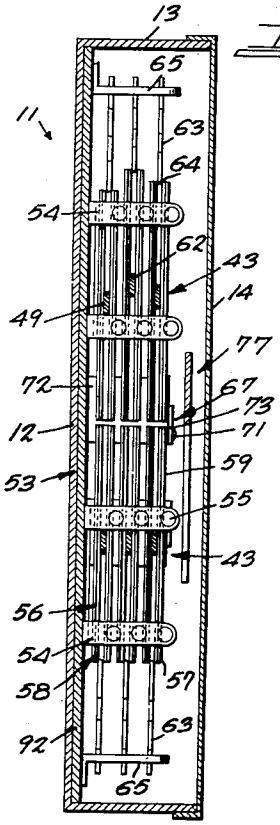

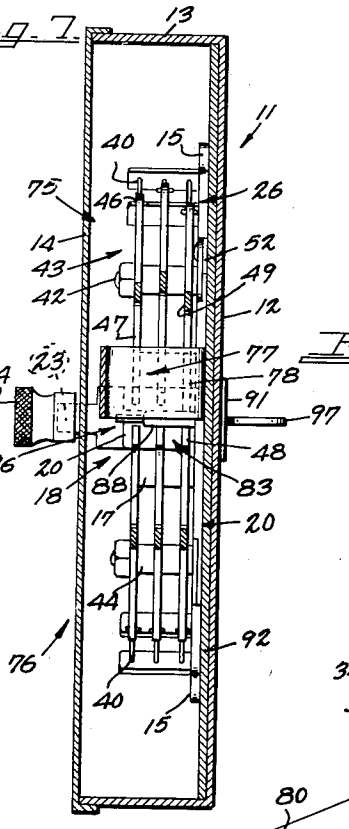

Fig. 10.

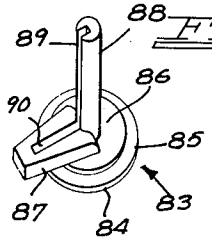

Fig. 12.

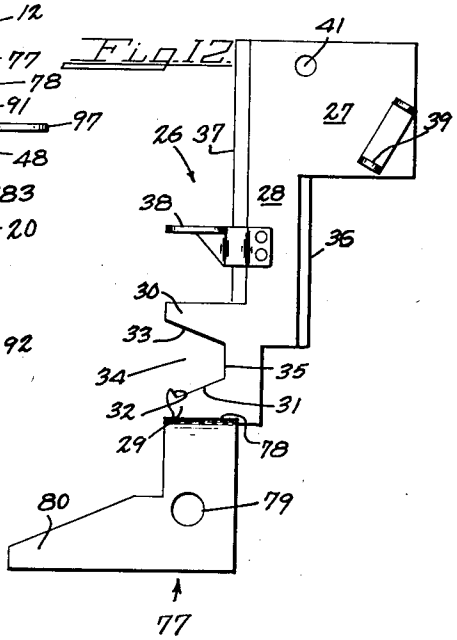

Fig. 6.

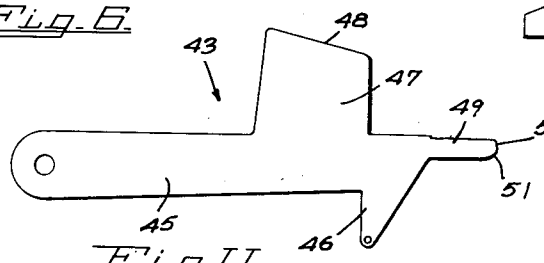

Fig. 11.

INVENTOR.
DANIEL HAVILAND.
BY Hazard and Miller
ATTORNEYS.

Patented Feb. 20, 1934 1,948,174

UNITED STATES PATENT OFFICE

1,948,174

DUAL ADJUSTABLE LOCK

Daniel Haviland, Sawtelle, Calif.

Application June 15, 1932. Serial No. 617,383

32 Claims. (Cl. 70—70)

My invention relates to an adjustable lock in which a single bolt is actuated by two unlocking mechanisms requiring two separate keys, such as a master key and what might be termed a guest key, and in which the locking mechanisms may be readily adjusted requiring either a new pass or a new guest key.

My invention may be considered as a further development of my patent application for Adjustable lock, filed April 10, 1931, Serial No. 529,093, matured into Patent No. 1,887,094, Nov. 8, 1932.

In my present invention I employ, as above mentioned, a single bolt, two sets of tumblers, each set being mounted on a carrier, one set of tumblers being operable by one key, such as a master key, and when actuated to retract the bolt this key functions to move the carrier and hence the bolt. The other set of tumblers are operated by another key which may be designated as the guest key. This key actuates the tumblers when moved to clear the barriers and also operates to shift the carrier and hence the bolt. In these features my present application resembles somewhat the construction and principles of my patent application above designated.

An object and feature of my invention in this application has to do with the construction and manner of re-setting the barriers for the master and the guest keys so that these may be set and readjusted in, possibly, a simpler way than in my prior patent application. In my present construction the operation and the setting involves a means by which the tumblers which are adjusted for one key may be released from this adjusted position and moved to an initial or non-operative position, then on using a new key formed to proper shape, this key when operating the tumblers automatically moves the barrier to its proper position. I then provide a latching or locking mechanism for retaining the barriers in this adjusted position. The lock may then be operated by this one key until it is desired to make a change.

Another object and feature of my invention in this adjustable type of barrier setting construction which uses a turning mechanism for shifting the barriers to a neutral or non-operative position, is, that such barriers can only be released from their active to their neutral position by actuating the lock by the master key. This, then, positions obscuring plates or the like in position by which a release device for the barriers may be disengaged therefrom, and by spring action the barriers return to their neutral position.

In this construction I preferably form the barriers in the form of a plurality of parallel ratchet bars, each bar having a slot for allowing the projection of the finger of one of the tumblers therethrough. These ratchet bars are spring pressed to normally return them to their neutral position and are held in an active or operative position by means of spring actuated pawls. These pawls may be released to permit sliding movement of each barrier to its neutral position. However, the pawls can only be released when movable covers or obstruction plates are shifted by the master key. Thus guest keys cannot be changed without authority of the person having the master key.

To necessitate the use of the master or pass key to change the adjustment of the barriers, it is first necessary to unlock the lock with the master key. This action brings the fingers of the tumblers through the slots of the barriers. Then, after release of the barriers by releasing the pawls, a new key may be inserted in the lock and by rotation of such key the tumblers are swung outwardly on their pivots, the fingers of such tumblers shifting each individual barrier in an outward direction so that the barriers will conform to the position required for actuating the tumblers and carrier by the new key. By this construction, therefore, each individual barrier of the set, wherether for the master key part of the lock or the guest key part, are set all at once by use of a key of the desired design and each individual barrier does not require to be separately adjusted.

Another object and feature of my invention relates to the type of key and the manner of inserting and removing the key. In my present construction, the key is preferably flat and I employ a rotary barrel having a guide groove, this groove being a longitudinal kerf in which the key is inserted after being pushed through the keyhole. The key then engages a finger on the outer portion of the rotary barrel, the finger then operating to shift the carrier instead of the carrier being directly actuated by part of the key. When the lock is unlocked, the key is not returned to its original position but an additional slot is formed in the lock frame or housing for removal of the key. As the same keyhole is utilized for both the master and the guest key for inserting these, there is a separate keyhole slot for removal of each of these keys.

My invention is illustrated in the accompanying drawings, in which:

Fig. 1 is a perspective of the back of the lock,

showing the openings for releasing the barriers of the master and the guest key portion of the lock.

Fig. 2 is a perspective view of the front of the lock, showing the inserting and two removal key-holes for the key.

Fig. 3 is an inside elevation of the lock with the back removed and in the locked position.

Fig. 4 is a view similar to Fig. 3 with the bolt retracted by the operation of the master key.

Fig. 5 is a horizontal transverse section of the lock on the line 5—5 of Fig. 3 in the direction of the arrows.

Fig. 6 is a vertical transverse section on the line 6—6 of Fig. 3 in the direction of the arrows.

Fig. 7 is a vertical transverse section on the line 7—7 of Fig. 3 in the direction of the arrows.

Fig. 8 is a vertical detailed section on the line 8—8 of Fig. 3 in the direction of the arrows, illustrating the barrier bars in their neutral position.

Fig. 9 is a similar elevation with the barrier bars in their operative position.

Fig. 10 is a perspective view of the rotatable key barrel and finger for operating the barrier.

Fig. 11 is a side elevation of one of the tumblers.

Fig. 12 is a plan of one of the carriers.

Fig. 13 is an elevation of the retraction plate and pawls.

Fig. 14 is an elevation of the key for actuating the release plate.

Fig. 15 is a perspective view of one of the barrier bars.

In constructing my lock I employ a housing 11 which has a front plate 12, edge plates 13, and a removable inside plate 14. In my lock I employ outside fixed guides 15 and an inside fixed guide 16, these being riveted or otherwise secured to the front plate 12 of the housing. A fixed bridging piece 17 connects the inside guides 16. The inside guides form a guide structure for the bolt 18, which bolt has a strap 19, an up-turned end 20 at the inside, a sloping latch head 21 at the front, there being a horizontal section 22 and a reverse bent section 23 to which is attached the knob 24. A compression spring 25 is located between the bridging piece 17 and the portion 23 of the bolt. This normally forces the bolt outwardly into its locked position. Mounted between the inside guide 16 and the outside guide 15, there is a longitudinally slidable carrier 26. This carrier is constructed in the form of a metal plate having an outer section 27, and a shank portion 28. An end lug 29 and an inner lug 30 extend from the shank in an opposite direction to the portion 27. The lug 29 has an inside surface 31 with a shoulder 32. The lug 30 has a sloping surface 33. The space 34 between these lugs is for operation of the key, the key having a clearance from the edge 35. The shank has opposite side edges 36 and 37. A puller arm 38 is secured to the shank and part of this extends upwardly to engage between the up-turned end 20 of the bolt and the bridging piece 17. A pair of lugs 39 extend upwardly from the section 27 of the carrier and in these is fitted a series of leaf springs 40, there being one for each tumbler. The carrier is also provided with an opening 41 in which is attached the pivot pin 42 for the tumblers designated 43. There are a series of these tumblers, three being illustrated. The tumblers are spaced apart on the pivot pin by washers 44. Each tumbler has a shank section 45, an offset arm 46, to the end of which is secured the free end of the spring 40. An opposite projection 47 has a sloping edge 48 to be engaged by the key. Each tumbler is provided with a projecting finger 49, the end of which is squared as indicated at 50, and adjacent this end there is a slight bevel 51.

In addition to the inside and outside guides 15 and 16 there are interior guides 52 which are secured to the front plate 12 of the housing. By this construction each carrier has a longitudinal motion, and the tumblers which are mounted on each carrier and thus move therewith have a pivotal movement, these being designed to swing outwardly, and are pressed or thrust inwardly by the springs 40. Preferably, the two carriers are identical and the sets of tumblers are all of the same shape and thickness.

There are two sets of barriers 53, each set being fitted between guide straps 54 which are attached to and extend outwardly from the front plate 12. There are spacing rivets 55 between these straps for the purpose of spacing the individual barrier bars 56, one of which is illustrated in detail in Fig. 15. Each of these barrier bars is in the form of a U-shaped channel or trough member 57, this having a web 58 and two flanges 59. The web is formed with a ratchet section 60 and preferably with a smooth surfaced section 61 with a slot 62 therebetween. The slot is formed for the projection or extension of the fingers of the tumblers therethrough.

Each barrier bar has a leaf spring 63 connected thereto at one end as indicated at 64. The opposite end of this spring is secured to a fixed bracket 65 attached to the front plate 12 and extending at right angles thereto. For each tumbler bar there is a spring pawl 66, each pawl being formed of a leaf spring and attached to the bracket 67, the base 68 of this bracket being secured to the plate 12 and the main part 69 of the bracket extending at right angles thereto, the fixed end 70 of each spring being secured to the main part 69 of the bracket. In order to release all of the pawls simultaneously, each of these brackets has a pivot pin 71 with a releasing plate 72 pivoted thereon. Each of these plates 72 has a slight projection 74 to be engaged by a special type of key 74', this key being similar to a screw driver but having a kerf 74'' at the end.

One portion of the lock mechanism 75, including the carrier, tumblers, and the set of barrier bars, may be considered as the master key portion; and the other portion 76 as the guest key portion; each requiring a separate key for its manipulation as hereinunder set forth in detail. Connected to the carrier of the master key section, there is an obscuring plate 77. This plate is parallel to the front plate 12 and inside plate 14 of the lock housing, and has an inwardly turned section 78, the end of which is secured to the carrier for the master key section of the lock. This obscuring plate 77 has a perforation 79. The plate has an extension 80. This extension 80, when the bolt is in the locked position and the carrier for the master key section is in its outward position, covers the key-hole perforation 81 in the inside cover 14 of the lock housing. This plate also has a second key-hole perforation 82. The obscuring plate also covers the perforation 82 but when the bolt is unlocked by the master key and the carrier of the master key section is retracted, the perforation 79 in the obscuring plate is brought into alignment with the perforation 82.

The lock barrel 83 has a disk-like outer end 84, the outer peripheral portion of which has a pe-

ripheral rim 85 and an inner circular thickened disk section 86. A finger 87 extends radially from the stem portion 88 of the barrel, this stem portion having a longitudinal kerf or groove 89. The finger has a radial slot 90 in alignment with the kerf 89. This barrel is held in place by means of an outer ring 91 secured on the outside of the plate 12 and an inner plate 92. These plates engage on oposite sides of the rim section 85 and thus hold the barrel in place but allow rotation of the barrel.

The plate 91 is provided with an insert keyhole slot 93 and with two withdrawal keyhole slots 94 and 95, one withdrawal keyhole slot being for the master key and the other for the guest key.

The key 96 is provided with a finger-gripping end 97 and with a shank 98. This shank has a contracted neck 99 where it passes through the disk section of the barrel and is provided with three notches 100, 101, 102, there being one notch for each tumbler, and, as above mentioned, three tumblers being illustrated.

My lock is intended for hotels, apartment buildings, office buildings, and the like, in which it is necessary for the proprietor to have a master key for each door, and each guest will have a key for his own door.

Considering these factors, the manner of operation of the lock is substantially as follows:

The master key is designed to only operate the master key side of the lock and the guest key the guest key side, each operating its own carrier and actuating a single bolt. When the master key carrier is in its forward position, that is, the position when the bolt is locked, the obscuring plate 77 covers the perforation 81 in the lock housing and, therefore, a person cannot operate the releasing plate 72 to release the pawls which hold the barrier bars in position and thus the guest key designed for the particular lock will operate this lock until it is changed by resetting the barrier bars. Also, no one can change the master key setting of the barriers as the perforation 79 will not be in alignment with the perforation 82. However, when the proprietor actuates the lock with his master key, this brings the obscuring plate into the position shown in Fig. 4. The special key 74' may then be used and inserted through either the perforation 81 or 82 or both of these if it is desired to change the setting of both locks. This action causes the operation of the releasing plate 72, releasing the pawls from the barrier bars and allowing these bars to move inwardly under their urging springs 63. It is necessary when the pawls are released that the tumblers be in their retracted position so that the fingers will extend through the slots 62 in each of these bars. Therefore, if it is desired to change the setting for the guest key portion of the lock, the guest key must be used to retract the carrier on such side of the lock.

Either the guest key portion or the master key portion of the lock may be set for new keys by pre-forming the keys and inserting these in the lock when the carrier of the respective portions of the lock is in its retracted position and the barriers are in their central position. The key is inserted with the finger 87 in the retracting position, that is, in the position of Fig. 4; then when the key is turned to force the tumblers and barriers outwardly to permit projecting of the bolt, each finger forces its corresponding barrier bar outwardly and these are engaged by the spring pawls and held in the adjusted position. Therefore, when the reverse operation takes place and the proper key is inserted, the tumblers are swung on their pivots until the fingers align with the proper opening or perforation in the barrier bar. In case the pawl should not catch the ratchet exactly on the tooth but should allow this to slip back, I form a slight bevel 51 on the end of each tumbler to be an initial guide in the slot 62, but, manifestly, if a key is employed which shifts the tumbler into a position where it will not align with the slot 62, the tumbler and the carrier cannot be retracted and the lock cannot be unlocked.

Various changes may be made in the details of construction without departing from the scope of the invention as defined by the appended claims.

I claim:

1. In a lock, a barrier and a tumbler, the tumbler having a longitudinal movement in reference to the barrier and also a transverse movement, the barrier having means to permit and to prevent longitudinal movement of the tumbler in one direction, the tumbler being mounted for movement in a transverse direction by a key and said tumbler having means to move the barrier into a position to permit longitudinal movement of the tumbler by a similar key for unlocking the lock, and means to retain the barrier in the adjusted position.

2. In a lock, a barrier bar, a tumbler slidable in a transverse direction relative to the bar, one end of the tumbler being engageable with the bar and movable longitudinally of the bar, said bar having means to permit a movement of part of the tumbler transverse to the bar for unlocking the lock when actuated by a proper key and to prevent such movement when the tumbler is moved by an unsuitable key, the barrier being shiftable longitudinally of and movable by means of the movement of part of the tumbler longitudinally of the barrier whereby the movement of the tumbler may adjust the barrier for use of different keys.

3. In a lock, a longitudinally movable tumbler, said tumbler having a finger, a barrier having means to permit and to prevent movement of the finger and hence of the tumbler unless the tumbler is positioned with the finger in a definite relation to the barrier, said barrier being movable by means of engagement with the finger to permit movement of the tumbler with the barrier to a different position from the barrier's first position, and means to retain said barrier in said second position.

4. In a lock, a retractable bolt and a retracting means for the bolt, a barrier having means in one relative position to part of the retracting means to permit retraction of the bolt and in another position relative to the retracting means to prevent retracting the bolt, the barrier and part of the retracting means being shiftable by a key to change the relative position of the barrier and part of the retracting means to permit retraction of the bolt when in the second relative position and to prevent retraction of the bolt when in their first relative position.

5. In a lock as claimed in claim 4, the retraction means having a movable element to engage the barrier and move the barrier for changing the relative position of the barrier and the retraction means.

6. In a lock, a carrier, a tumbler mounted thereon, the tumbler having a finger, a barrier having means to pass or to stop the finger when in a correct operative or incorrect inoperative

position, said barrier being movable into inoperative or operative position, the movement of the barrier into a new operative position being effected by a key, means to retain the barrier in its new operative position, and the tumblers and carrier being operable by a key similar to that used to move the barrier.

7. In a lock as claimed in claim 6, means adapted for operation by a releasing key to release the barriers from their operative position, and a spring means to force all of the barriers when released to a neutral position.

8. A lock provided with a bolt, a carrier with tumblers thereon, the tumblers being key actuated, and on retraction of the carriers with the tumblers the bolt being retractible, combined with a barrier formed of a plurality of relatively adjustable elements, means urging said elements to a neutral position, a retaining means to hold said elements in an operative position, said elements when in an operative position being adapted to permit movement of the tumblers and the carrier when the tumblers are actuated by a proper key and to prevent movement of the tumblers and carrier when operated by an incorrect key, and a releasing means adapted for operation by a releasing key for releasing the barriers from their operative position to permit return of the barriers to their neutral or inoperative position.

9. In a lock as claimed in claim 8, said tumblers having means to engage the adjustable elements of the barrier to shift said elements to a different position by actuating the tumblers by a different key and thereby resetting the barrier to require such different key for actuating the tumblers and carrier for unlocking the lock.

10. A lock having a slidable carrier with tumblers pivotally mounted thereon, each tumbler having a finger, a barrier formed of a plurality of slidable bars, each bar having an opening for passing of a finger, a spring means to urge the bars to a neutral position, a latching means to retain the barrier bars in operative positions whereby on actuating the tumblers by a suitable key the tumblers and carrier may be retracted, and a releasing means adapted for operation by a releasing key to release the latching means for return of the barrier to a neutral position.

11. A lock as claimed in claim 10, the barrier bars when in the neutral position having means engaged by the fingers of the tumblers, said tumblers being movable by a second key to shift the barrier bars to a second operative position whereby the tumblers may be moved by a similar key for retraction of the carrier.

12. A lock as claimed in claim 10, an obscuring means operative when the carrier is in its forward position to prevent use of a releasing key for actuation of the releasing means but to permit use of a releasing key for actuation of the releasing means when the carrier is retracted.

13. A lock having a single bolt, a pair of carriers, each having a set of tumblers with fingers, the carrier and tumblers being movable and means on either carrier to retract the bolt, a pair of barriers having adjustable elements, one for each set of tumblers, each set of tumblers being adapted for actuation by a different key to bring the tumblers into position for retraction in reference to the barrier, both barriers being shiftable from a first operative to a neutral position, a latching means to retain the barriers in an operative position, a releasing means adapted for operation by a releasing key to release each of the latching means to permit movement of the barriers to their neutral position, the barriers when in the neutral position being engageable by the fingers and adapted to be moved by a second pair of keys to second operative positions, said second positions of the barriers preventing retraction of the tumblers by the first keys.

14. A lock as claimed in claim 13, one of the sets of tumblers being retractable by a master key, and an obscuring means connected to the carrier operated by the master key to permit or prevent use of a releasing key for operation of the releasing means.

15. A lock having a housing with a single rotatable barrel having a kerf to receive a key, and having a single keyhole slot for insertion of a key and two keyhole slots each for the removal of a special key, two carriers each having a set of tumblers, a barrier for each set of tumblers, a finger on the barrel to move either of the carriers, each key being adapted to engage one set of tumblers only, and said barrel being rotatable when operated by one key for removal of such key through one removal keyhole slot and being movable by the other key to another position for moving the other carrier and removal of the other key from the second removal keyhole slot.

16. In a lock, a barrier having a barrier bar, said bar having a rack on one side with an opening through the bar, a pawl to engage the rack and hold the opening in an operative position, a spring acting on the bar to shift the bar to a neutral position, means adapted for operation by a releasing key to release the pawl for such return of the bar, and tumblers adapted in one position when moved by a key to engage said opening and by further operation of a key to move said barrier bar from its neutral to its operative position.

17. A lock comprising in combination, a housing with a single keyhole slot adapted for the insertion of a pair of different keys each insertable in said slot, the housing having two withdrawal keyhole slots, adapted one for the withdrawal of one key only, and the other for the withdrawal of the other key only, and a single bolt, a pair of carriers each interconnecting with the bolt for retraction of same, a tumbler on each carrier, a shiftable barrier for each tumbler, means urging each barrier to a neutral position, a latching means for each barrier to retain same in an operative position relative to its tumbler, a releasing means for each latching means, and means operated by one key only to prevent or to permit operation of the releasing means.

18. A lock comprising in combination, a housing with a single keyhole slot adapted for the insertion of a pair of different keys each insertable in said slot, the housing having two withdrawal keyhole slots, one for the withdrawal of one key only, and the other for the withdrawal of the other key only, a single bolt, a pair of carriers each interconnecting with the bolt for retraction of same, a tumbler on each carrier, a shiftable barrier for each tumbler, means urging each barrier to a neutral position, a latching means for each barrier to retain same in an operative position relative to its tumbler, a releasing means adapted for operation by a releasing key for each latching means, means operated by one key only to prevent or to permit operation of the releasing means by the releasing key, either of the tumblers being adapted for actuation by a second key, and interconnecting means between the tumbler actuated by said second key and its barrier to shift said latter barrier from its neutral to a new operative position.

19. In a lock, a tumbler and a barrier mounted for relative movement for locking and unlocking the lock, a barrier having means to prevent or to permit such relative movement, the said barrier being positioned to occupy a neutral or an operative position relative to the tumbler, said tumbler being adapted for actuation by a key to effect said relative movement of the tumbler and the barrier, and means interconnecting between the tumbler and the barrier to shift the barrier when actuated by the key from its neutral to an operative position.

20. In a lock, as claimed in claim 19, means urging the barrier from its operative to its neutral position, a restraining means for the urging means, and a releasing means to release said restraining means for shifting of said barrier by said urging means.

21. In a lock, as claimed in claim 19, means urging the barrier from its operative to its neutral position, a restraining means for the urging means, a releasing means adapted for operation by a releasing key to release said restraining means for shifting of said barrier by said urging means, and an obscuring means adapted to be moved by a key to prevent or to permit use of a releasing key for actuation of said releasing means.

22. In a lock, a tumbler and a barrier mounted for relative movement for locking and unlocking the lock, the barrier having a solid section to prevent and an opening to permit such relative movement, the tumbler having a finger to engage the solid section or to enter the said opening, the said barrier being shiftable on its longitudinal axis to occupy a neutral or an operative position relative to the tumbler, said tumbler being mounted for a transverse movement by a key and a longitudinal movement by the same key, the finger of the tumbler being adapted to engage in the said opening and when actuated by the key to move the barrier longitudinally of its axis from its neutral to an operative position.

23. In a lock as claimed in claim 22, a spring urging the barrier to its neutral position, said barrier having a ratchet with a pawl to restrain the barrier from movement, a releasing plate to release the pawl and permit the barrier to move from its operative to its neutral position.

24. In a lock as claimed in claim 22, a spring urging the barrier to its neutral position, said barrier having a ratchet with a pawl to restrain the barrier from movement, a releasing plate to release the pawl and permit the barrier to move from its operative to its neutral position, the lock having a housing with a plurality of openings, and an obscuring plate slidably mounted in the housing and having means to obstruct said openings, the said openings when unobstructed permitting insertion of an implement to actuate the releasing plate.

25. A lock, comprising in combination, a single bolt, means to urge the bolt to locking position, a plurality of carriers each having means to retract the bolt on longitudinal movement, a set of tumblers on each carrier, each set being adapted for transverse and longitudinal movement by a key dissimilar to keys for the other set, a group of barriers associated with each set of tumblers and having means to permit or to prevent longitudinal movement of its associated set of tumblers, each group of barriers being adjustable from a neutral to an operative position, the tumblers of each set and its associated group of barriers having interengaging means to adjust a group of barriers when its associated set of tumblers is moved transversely by a key from a neutral to an operative position.

26. A lock as claimed in claim 25, means to urge each group of barriers to a neutral position, a restraining means to hold each group in an operative position, and a releasing means adapted for operation by a releasing key to release the restraining means.

27. A lock as claimed in claim 25, means to urge each group of barriers to a neutral position, a restraining means to hold each group in an operative position, a releasing means adapted for operation by a releasing key to release the restraining means, and an obscuring plate mounted on one of the carriers and adapted when moved by said carrier to prevent or to permit actuation of the said releasing means.

28. In a lock, a barrier formed of a plurality of barrier bars, a tumbler for each bar, each bar having means to permit or to prevent relative movement in one direction of a tumbler and its associated barrier bar, each bar being movable between a neutral and an operative position, means to urge each bar to its neutral position, a restraining means to hold each bar in its operative position, and releasing means adapted for operation by a releasing key for said restraining means, each bar being individually movable from a neutral to an operative position.

29. In a lock, a barrier formed of a plurality of barrier bars each having a ratchet and a solid surface with an opening therein, a tumbler for each bar, a portion of the tumbler being adapted on relative longitudinal movement of the tumbler and barrier to engage either in the opening or the solid surface, each tumbler bar being mounted for movement between a neutral or an operative position, a spring to urge each bar to its neutral position, a pawl to restrain each bar in an operative position, and a rotational releasing plate to release all of the pawls and permit movement of the barriers to a neutral position.

30. A lock having a lock housing, a single bolt, a single keyhole in the housing for inserting of two different keys, and a separate withdrawal keyhole for each key, a pair of tumbler and barrier mechanisms each being adapted to be operated by a different key inserted through the single keyhole slot and each mechanism having adjusting means requiring a different key, one key being adapted to operate one mechanism to project the bolt or to retract the bolt, and another key being adapted to operate the other mechanism to project the bolt or to retract the bolt.

31. In a lock, a housing with a single keyhole slot adapted for insertion of either of two keys one only being insertable at one time, and two withdrawal keyhole slots adapted each for the withdrawal of one key only, and a single bolt and two separate means one of which is adapted for operation by one of said keys only at one time to retract said bolt.

32. A lock having a housing with a single keyhole slot for inserting two keys one only being insertable at one time, and a separate withdrawal keyhole slot for each key, a single bolt, a tumbler to be actuated by each key and a barrier for each tumbler, and means to relatively move each tumbler and barrier by a different key.

D. HAVILAND.