Sept. 20, 1966 C. BLOCK ETAL 3,274,578

FIRE ALARM SYSTEM

Filed Feb. 5, 1964 2 Sheets-Sheet 1

FIG. 1

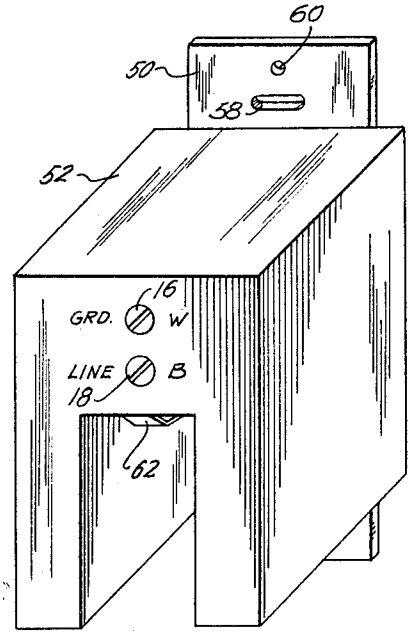

FIG. 4

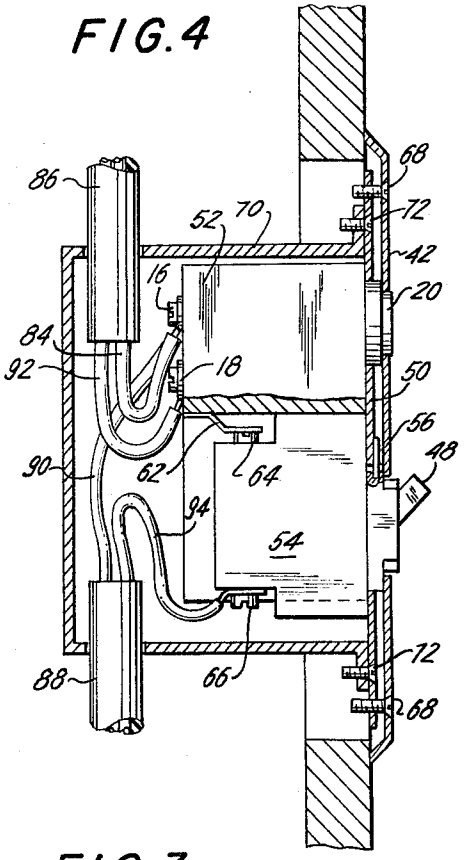

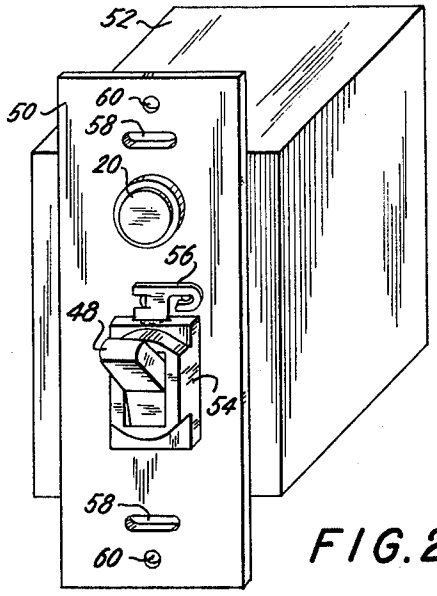

FIG. 2

FIG. 3

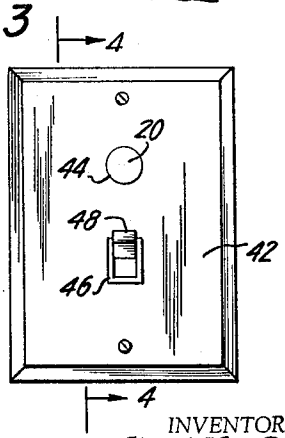

INVENTORS
CHARLES BLOCK
LEON J. MINTZ

BY James and Franklin

ATTORNEYS

Sept. 20, 1966 C. BLOCK ETAL 3,274,578

FIRE ALARM SYSTEM

Filed Feb. 5, 1964 2 Sheets-Sheet 2

FIG. 5

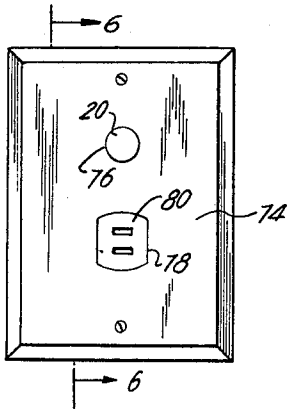

FIG. 6

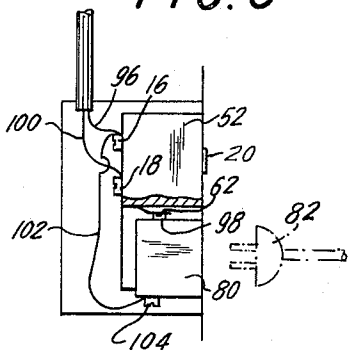

FIG. 7

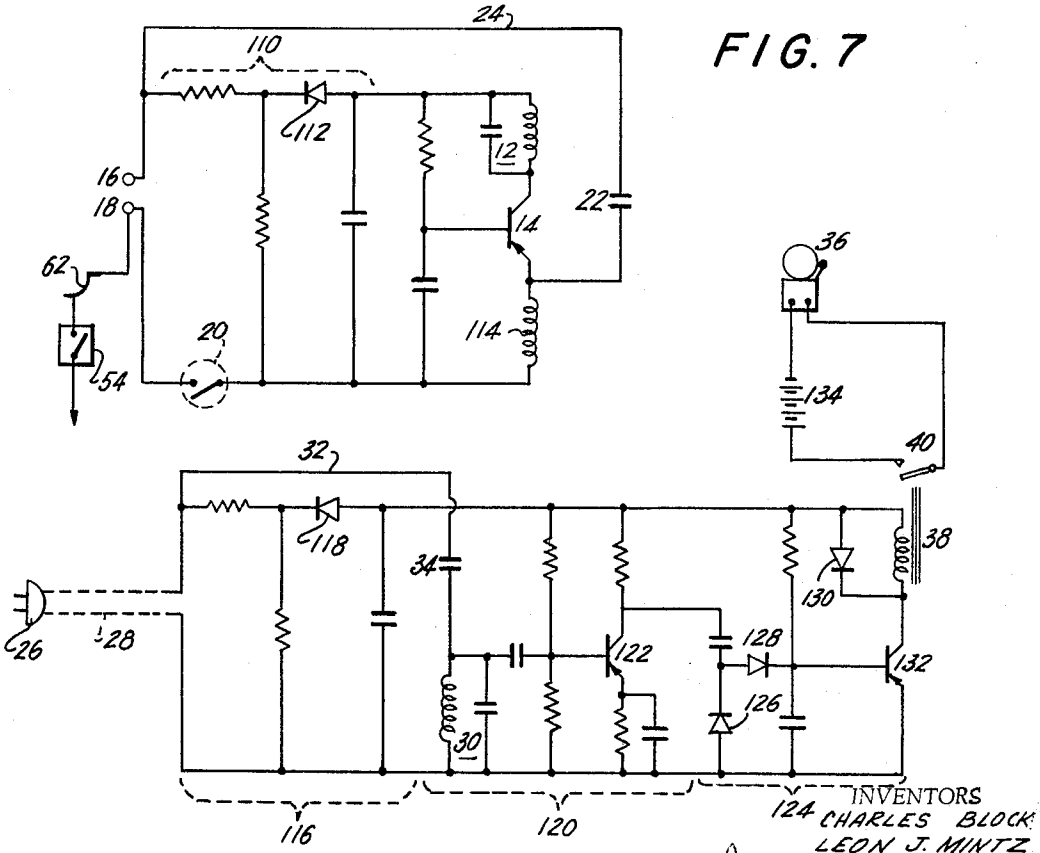

FIG. 8

INVENTORS
CHARLES BLOCK
LEON J. MINTZ

BY James and Franklin

ATTORNEYS

United States Patent Office

3,274,578

Patented Sept. 20, 1966

3,274,578

FIRE ALARM SYSTEM

Charles Block, 1129 Albert Road, North Bellmore, N.Y., and Leon J. Mintz, 1046 E. 29th St., Brooklyn, N.Y.

Filed Feb. 5, 1964, Ser. No. 342,704

5 Claims. (Cl. 340—220)

This invention relates to fire alarm systems, and more particularly to a wireless system utilizing the regular household or building or plant electrical wiring.

The general object of the invention is to improve such fire alarm systems. A more particular object is to provide a system in which temperature sensors may be located at any wall switch or wall receptacle or outlet. The sensor controls a fixed high frequency oscillator, the output of which is conveyed through the household wiring.

A further object is to so miniaturize the transmitter or oscillator that it may be located inside the standard recessed wall box or so-called "gem" box ordinarily used to house the wall switch or wall receptacle alone. In accordance with a further feature and object of the invention, the switch or receptacle unit itself is made readily detachable from the alarm transmitter, so that in the event of switch failure for example, the switch may be replaced at negligible cost without having to replace the more expensive alarm transmitter.

A further object of the invention is to provide an alarm and a fixed high frequency receiver controlling the alarm, the said unit being adapted to be simply plugged into an ordinary wall receptacle. Thus, one or more such alarm units may be located at desired locations, and may be moved from time to time from one location to another as circumstances may warrant.

To accomplish the foregoing general objects, and other more specific objects which will hereinafter appear, our invention resides in the fire alarm system, and the elements thereof, and their relation one to another, as are hereinafter more particularly described in the following specification. The specification is accompanied by drawings in which:

FIG. 1 is a perspective rear view of a transmitter embodying features of the invention;

FIG. 2 is a perspective front view without the cover plate and wall box;

FIG. 3 is a front view looking toward the cover plate;

FIG. 4 is a vertical section showing the transmitter and a wall switch housed in a conventional recessed wall box, omitting the clamps for the wiring;

FIG. 5 is a front view with the transmitter combined with a receptacle rather than a wall switch;

FIG. 6 is a vertical section drawn in schematic form;

FIG. 7 is a wiring diagram for the transmitter; and

FIG. 8 is a wiring diagram for the receiver and alarm.

Referring to the drawing, and more particularly to FIGS. 7 and 8, the system comprises a fixed high-frequency oscillator, centered about a tank circuit **12** and a transistor **14**, and adapted to be readily connected into and to be energized from an ordinary household power supply line at terminals **16** and **18**. There is also a suitable fire detector or sensor usually a temperature-responsive sensor such as a bimetallic element, indicated at **20**, and this is connected between the line and the oscillator in order to energize and start the oscillator in the event

of fire. The high-frequency output of the oscillator is coupled back to the power supply line, in this case by means of a coupling capacitor **22** and a conductor **24**.

There is also a fixed high-frequency receiver, shown in FIG. 8, this being adapted to be plugged into the household power supply line at some other desired location, as indicated by the plug **26** and cord **28**. The receiver is tuned to the same fixed frequency as the transmitter, by means of a tank circuit **30**, and is coupled to the line through conductor **32** and coupling capacitor **34** for the reception of high frequency. There is an electrically operated alarm **36**, and a relay **38** having contacts **40** which are in series with the alarm, and which are closed by a fire signal. Preferably the contacts are spring biased to close, and the receiver output serves to hold the contacts open when no fire signal is received, but permits closing of the contacts when a fire signal is received.

In accordance with an important feature of the invention, the transmitter is so shaped and dimensioned that it may be located together with a wall switch or receptacle in a standard recessed wall box or "gem" box previously receiving the wall switch or receptacle alone. Thus referring to FIG. 3, the cover plate **42** is of usual size, but it has an opening **44** through which the sensor **20** is exposed, and another opening **46** for the handle **48** of a wall switch.

Referring next to FIG. 2, the metal strap or adapter plate **50** carries an insulation casing **52** which houses the transmitter. The sensor **20** passes through a hole in strap **50**. The switch unit **54** is carried by the strap **50** and is preferably detachably mounted, as is indicated by the cam or lock **56** on strap **50**. The strap has the usual slots **58** which receive screws attaching the same to the box, and it has the usual threaded holes **60** for screws which hold the cover plate or wall plate.

The rear view of FIG. 1 shows how the transmitter casing **52** has an inverted U shape or is cut away at the bottom to receive the switch unit, omitted in FIG. 1. It also shows the terminal screws, in this case a ground screw **16** and a line screw **18**. A leaf spring contact is also visible at **62**.

Referring now to FIG. 4, the switch unit **54** is carried by the adapter plate or strap **50**, it being detachable and locked in position by the cam lock **56**. It nests beneath the casing **52** and it has top and bottom terminal screws **64** and **66**. The top screw **64** is engaged by the leaf spring contact **62**, thereby connecting terminal **18** of the transmitter to the switch.

FIG. 4 also shows how the fire sensor **20** is carried by transmitter casing **52** and passes through the strap **50** and cover plate or wall plate **42**. The latter is held on strap **50** by the usual screws **68**, and the strap **50** is secured to the recessed wall box **70** by screws **72**.

FIGS. 5 and 6 illustrate how the transmitter may be combined with a wall receptacle or outlet instead of a wall switch. In FIG. 5 the cover plate **74** has an opening **76** for sensor **20**, and another opening **78** for an outlet or receptacle **80**, the latter being adapted to receive a conventional plug, indicated in broken lines at **82** in FIG. 6. FIG. 4 is somewhat simplified by omitting the screw clamps for the wiring coming into the box, and FIG. 6 has been further simplified compared to FIG. 4. However, FIG. 6 does show how the outlet unit **80** nests

beneath or within the transmitter casing **52**, and has terminal screws at the top and bottom, the upper one being engaged by leaf spring contact **62**. The receptacle **80** is preferably detachably secured to the strap by means such as the cam lock shown at **56** in FIG. 2.

It will thus be seen that the transmitter is dimensioned to be combined with a switch or receptacle, and to be housed in the standard recessed wall box of the switch or receptacle, the transmitter including a temperature-responsive sensor **20** at the front, and having high-frequency oscillator circuitry controlled by the sensor. The assembly is completed by a cover plate **42** or **74** which has an opening for the sensor and another for the switch or receptacle. The transmitter and the switch or receptacle have appropriate terminal screws at the back for line and ground connections inside the box. In preferred form, the transmitter assembly comprises an adapter plate **50** carrying an inverted U-shaped insulation casing **52** which includes the sensor **20** at the front, the latter passing through the adapter plate **50**.

The casing houses solid-state semiconductor components for a high-frequency oscillator circuit and its D.C. supply, the circuit being controlled by the sensor **20**. The casing **52** further has terminal screws **16** and **18** at the back for line and ground connections. The adapter plate **50** is further provided with means such as the cam lock **56** to detachably receive a standard switch or receptacle unit, the latter preferably having its terminal screws at the top and bottom. The casing **52** includes a downwardly urged spring contact **62** which bears against the top screw of the switch or receptacle for electrically connecting the "line" screw **18** at the back of the casing to the switch.

Detachable switch and outlet units are already known and are available on the commercial market. One such unit is the so-called "Despard" unit which is locked to the adapter plate or strap by a rotatable cam lock, such as that shown in FIG. 2, but any other detachable unit could be employed. The reason a detachable unit is preferred is that in the event of switch failure the switch unit may be replaced at slight cost, without having to replace the alarm transmitter.

In conventional house wiring the ground line, colored white, must be maintained continuous. The "hot" line is colored black, or sometimes red. In FIG. 4 cable **86** supplies power, and cable **88** extends to an overhead lamp fixture controlled by switch **54**. The ground or white conductor **84** from "BX" or other sheathed cable **86** is connected to ground terminal **16**. The ground or white wire **90** of cable **88** is also connected to terminal **16**. The black wire **92** is connected to terminal **18**, and the black wire **94** is connected to switch terminal **66**. Cables **86** and **88** are anchored securely to box **70** by means of conventional screw clamps, not shown. It will be understood that the leads **84**, **90**, **92** and **94** usually are longer than here shown, so that they may be attached to the terminal screws while the assembly **52**, **54** is outside the box, the assembly then being pushed into the box and attached by screws **72**, just as is done with a switch or receptacle alone.

In FIG. 6 the ground or white wire **96** is connected to terminal **16**. The hot or black wire **100** is connected to the terminal **18**, and through leaf spring **62** connected to the upper screw **98** of the receptacle **80**. Terminal **16** is connected by means of jumper **102** to the terminal **104** of the receptacle **80**.

Referring now to FIG. 7, the spring contact is indicated at **62**, and the switch unit at **54**. The circuit is essentially conventional, it being miniaturized by the use of solid-state semiconductor elements. The left-hand part of the circuit, indicated by dotted line bracket **110**, is a D.C. power supply section utilizing a rectifier **112**. The right-hand portion of the circuit is the oscillator, centering about transistor **14**, and utilizing a feed-back coil **114** coupled to fixed tuned tank circuit **12**. The output is delivered through output coupling capacitor **22**. The circuit is connected to terminals **16** and **18**, both for power supply to the circuit, and for high frequency transmission from the circuit.

Referring now to FIG. 8, the receiver circuit also is preferably miniaturized by the use of solid-state semiconductor elements. The left-hand portion indicated by dotted line bracket **116** constitutes a D.C. power supply section based on rectifier **118**. The received high frequency energy is supplied to a fixed tuned circuit **30** through a coupling capacitor **34**.

The receiver section is indicated by dotted line bracket **120**, and includes a transistor **122**. The right-hand portion of the circuit serves to rectify the receiver output and to amplify the resulting D.C. output for control of relay **38**. This section is indicated by dotted line bracket **124**, and includes voltage doubler rectifiers **126**, **128**, and transient suppressor rectifier **130**, as well as a power transistor **132** used for D.C. amplification.

In preferred form the alarm **36** is energized by a local battery **134**. The alarm may be a bell or buzzer or horn or other such device. The advantage of a local battery is in making the alarm fail-safe, so that in the event of power failure the alarm will sound.

When a battery-operated alarm is used, the battery may be of the automatically rechrageable type, and may be kept connected to the power line. Thus, the battery charge is replenished whenever low, and the battery is available to sound the alarm in the event of power failure, as well as in the event of fire. Then the alarm system will not be mistakenly relied on, when in fact there is no power to energize it.

In some cases the user may prefer that the alarm be powered directly from the household wiring, in which case the conductors **28** (FIG. 8) may extend to the alarm and thereby replace the battery **134**. The system then is fail-safe to the extent that any failure in the receiver other than complete power failure will sound the alarm.

Although we have illustrated the transmitter associated with a wall switch in FIG. 3, and with a receptable in FIG. 5, in most cases a wall switch is preferred because it is located at greater height. A wall receptable is equally good when the receptacle is an elevated one, but if the receptacle is low it is less effective. For the present purpose it is preferred that the receptacle be at least two feet from the floor.

Apart from miniaturization, an additional advantage of using solid-state components is that the circuitry is instantaneously responsive. No warm-up period is required.

In simplest form, the sensor is a bi-metallic disc or thermostat which is temperature-sensitive. However, other sensors are known, responsive to smoke for example.

An obvious advantage of the present system is that the sensor may be located where desired, for example, in a garage, or in a basement near an oil burning furnace. Multiple sensors may be provided, thereby greatly increasing the effectiveness of the system. Similarly, multiple alarms (meaning the combination of receiver and alarm) may be provided. One alarm may be located in a bedroom, to be heard at night. Another alarm may be located in a kitchen, to be heard during the day. The alarm combination may be housed in an ornamental housing suitable to be placed on a table or shelf, with a flexible cord like a lamp cord extending to a nearby wall outlet. The alarm may be designed to be hung on a hook or nail, and be similarly connected by its flexible cord to a convenient wall outlet. The alarm may be moved readily from one room to another. However, if desired the alarm unit may be permanently mounted in a box designed for recessed wall mounting.

The system has been referred to as a household system, but this is not intended to exclude its application to an apartment house, or office, or industrial plant. The term is used to distinguish from an alarm system which is in-

tended to sound an alarm at a very remote point, say a firehouse. The present alarm will function on wiring coming from the same power line transformer. Thus, neighbors may have a common alarm, and a warning will be sounded in a neighboring occupied house in the event of fire in a nearby vacant house. However, if the neighbors are not cooperative, and prefer not to have a combined alarm, the system is readily localized as much desired by the use of different fixed frequency tuning. The frequency may be in a range of from 200 to 550 kilocycles, and thus localized alarm systems may be provided when desired by using different frequencies.

To summarize, the basic unit preferably consists of an adapter plate with a block or case permanently fastened to the rear of the plate. The case contains the circuitry and a bimetal thermal sensing element which projects through the adapter plate. In addition, three terminals project from the case. Two are screw terminals which are marked "line" and "ground," and one is a spring terminal which is joined internally to the line screw terminal. These are constructed to U.L. acceptable specifications.

The spring terminal, the opening in the case, and an appropriate opening in the adapter plate, are so oriented and relatively located as to accept and contain a standard "Despard" type of switch or receptacle. This is a standard commodity manufactured by many manufacturers of electrical switches and hardware, and although it is available in many forms, they are all mountable in the same openings and are retained by the same type of lock or clip.

In any normal electrical installation the appropriate wires are connected to the two screw terminals on the rear of the case and to the one exposed screw terminal on the Despard switch. The entire unit then is inserted into the gem box, and fastened in the same manner as a standard switch or receptacle. A decorative cover plate with suitable openings is then fastened to the adapter plate in the same manner as a standard wall plate.

If the temperature of the room rises to a level sufficient to activate the thermal switch, a signal is generated by the transmitter and fed through all electrical lines in the building. This signal is immediately converted into an audible signal by one or more similarly tuned receiver units connected to the power line.

It is believed that the construction and operation of our fire alarm system, as well as the advantages thereof, will be apparent from the foregoing detailed description. It will also be apparent that while we have shown and described the system in a preferred form, changes may be made without departing from the scope of the invention, as sought to be defined in the following claims. In the claims, the reference to a temperature-responsive sensor is not intended to exclude other types of fire detecting sensors.

We claim:

1. A transmitter assembly for a fire alarm system which transmitter is intended to transmit by high frequency carrier to a receiver-controlled alarm through the usual household power supply wiring, said transmitter being compactly dimensioned and being housed together with a power wiring component in the standard recessed wall receptacle previously used for said wiring component, said transmitter including a temperature responsive sensor, and having high frequency oscillator circuitry controlled by said sensor, and a cover plate for said wall receptacle, said cover plate having an opening for the sensor and having another opening for the said wiring component, said transmitter and wiring component having appropriate terminal screws at the back for line and ground connections inside the recessed wall receptacle.

2. A transmitter assembly for a fire alarm system which transmitter is intended to transmit by high frequency carrier to a receiver-controlled alarm through

the usual household power supply wiring, said transmitter being compactly dimensioned and being housed together with a power wiring component in the standard recessed wall receptacle previously used for said wiring component, said transmitter including a temperature responsive sensor at the front, said transmitter having screws at the back for line and ground connections, a power wiring component having connection terminals at the back, means electrically connecting the line screw of the transmitter to one terminal of the wiring component, said transmitter having D.C. supply and high frequency oscillator circuitry controlled by said sensor and utilizing solid state semiconductor elements, and a cover plate for said wall receptacle, said cover plate having an opening properly located and dimensioned for the sensor and having another opening properly located and dimensioned for the wiring component.

3. A transmitter assembly for a fire alarm system which transmitter is intended to transmit by high frequency carrier to a receiver-controlled alarm through the usual household power supply wiring, said transmitter being combined and housed together with a power wiring component in the standard recessed wall receptacle previously used for said wiring component, said transmitter assembly comprising an adapter plate carrying an insulation casing including a temperature responsive sensor at the front and passing through the adapter plate, said casing housing high frequency oscillator circuitry controlled by said sensor and utilizing solid state semiconductor elements, said casing having screws at the back for line and ground connections, said adapter plate being provided with means to receive and hold the said wiring component, said casing having means electrically connecting its line screw to the said wiring component, and a cover plate for said wall receptacle, said cover plate having an opening for the sensor and having another opening for the wiring component.

4. A transmitter assembly for a fire alarm system which transmitter is intended to transmit by high frequency carrier to a receiver-controlled alarm through the usual household power supply wiring, said transmitter being combined and housed together with a power wiring component in the standard recessed wall receptacle previously used for said wiring component, said transmitter assembly comprising an adapter plate carrying near one end an insulation casing including a temperature responsive sensor at the front and passing through the adapter plate, said casing housing high frequency oscillator circuitry controlled by said sensor, said casing having screws at the back for line and ground connections, said adapter plate being provided near its other end with means to detachably receive and hold said wiring component, the latter having its connection screws at the top and bottom, said casing including a downwardly urged spring contact for bearing against the top screw of the wiring component and electrically connected to the line screw at the back of the casing, and a cover plate for said wall receptacle, said cover plate having an opening properly located and dimensioned for the sensor and having another opening properly located and dimensioned for the wiring component.

5. A transmitter assembly for a fire alarm system which transmitter is intended to transmit by high frequency carrier to a receiver-controlled alarm through the usual household power supply wiring, said transmitter being combined and housed together with the power wiring component in the standard recessed wall receptacle previously used for said wiring component, said transmitter assembly comprising an adapter plate carrying near one end an inverted U-shaped insulation casing including a temperature responsive sensor at the front and passing through the adapted plate, said casing housing D.C. supply and high frequency oscillator circuitry controlled by said sensor and utilizing solid state semiconductor elements, said casing having screws at the back for line and ground connections, said adapter plate being provided

near its other end with means to detachably receive said wiring component, the latter having its connection screws at the top and bottom, said casing straddling said wiring component and including a downwardly urged spring contact for bearing against the top screw of the wiring component and electrically connected to the line screw at the back of the casing, and a cover plate for said wall receptacle, said cover plate having an opening properly located and dimensioned for the sensor and having another opening properly located and dimensioned for the wiring component.

References Cited by the Examiner

UNITED STATES PATENTS

2,574,458	11/1951	Atkinson et al.	
2,580,539	1/1952	Goodwin	340—310
3,035,251	5/1962	Inderwiesen	340—310 X
3,114,901	12/1963	Capelle	340—227
3,204,245	8/1965	Dykaar	340—220

NEIL C. READ, *Primary Examiner.*

R. M. ANGUS, D. YUSKO, *Assistant Examiners.*