May 9, 1933. T. J. WILLIAMS 1,908,094

FEEDER FOR PRINTING PRESSES

Filed May 26, 1930 5 Sheets-Sheet 1

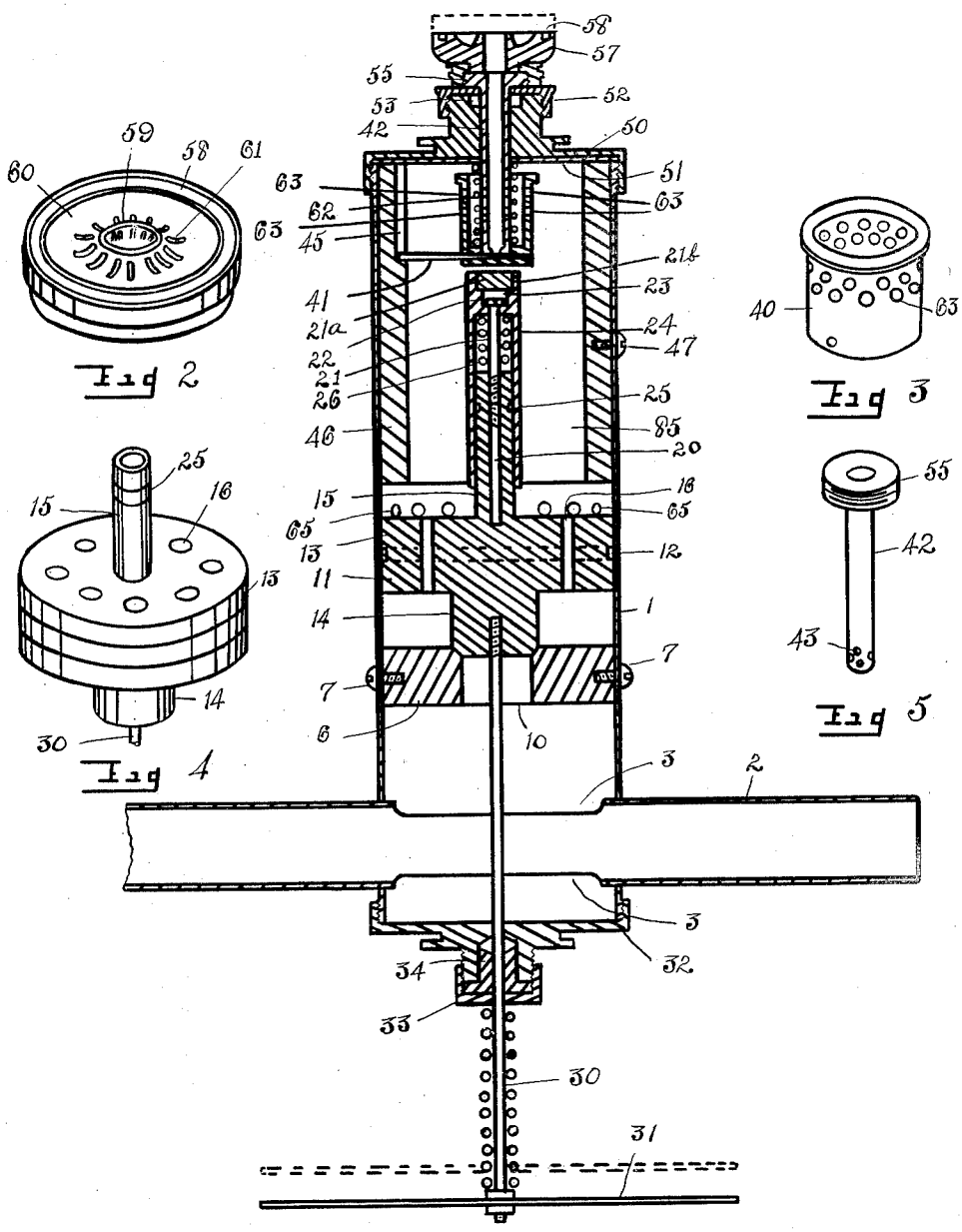

Fig 1

Fig 2

Fig 3

Fig 4

Fig 5

Inventor

Thomas J. Williams

By Thomas L. Wilder

Attorney

May 9, 1933. T. J. WILLIAMS 1,908,094

FEEDER FOR PRINTING PRESSES

Filed May 26, 1930 5 Sheets-Sheet 2

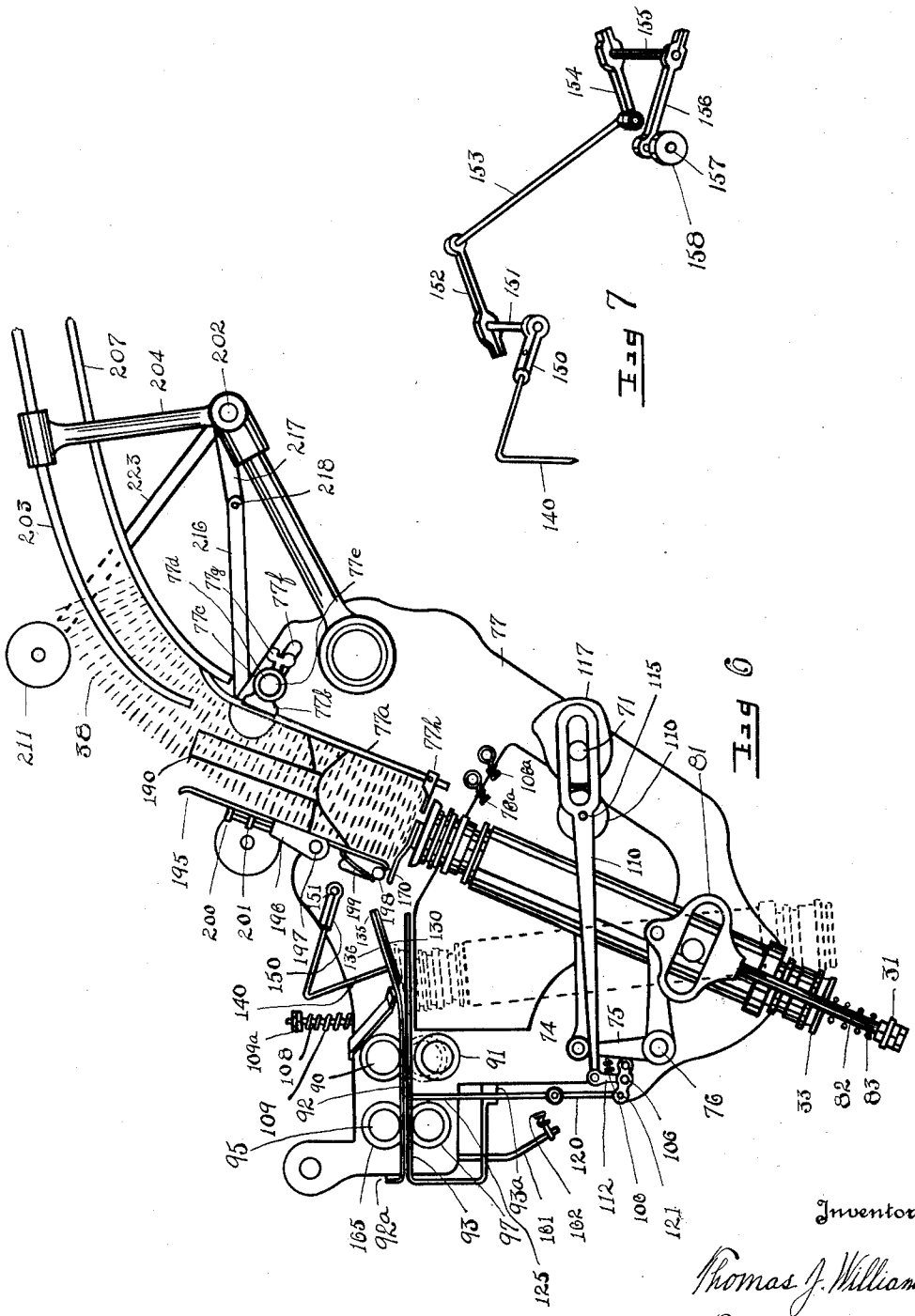

Fig 7

Fig 6

Inventor

Thomas J. Williams

By Thomas L. Wilder

Attorney

May 9, 1933. T. J. WILLIAMS 1,908,094

FEEDER FOR PRINTING PRESSES

Filed May 26, 1930 5 Sheets-Sheet 3

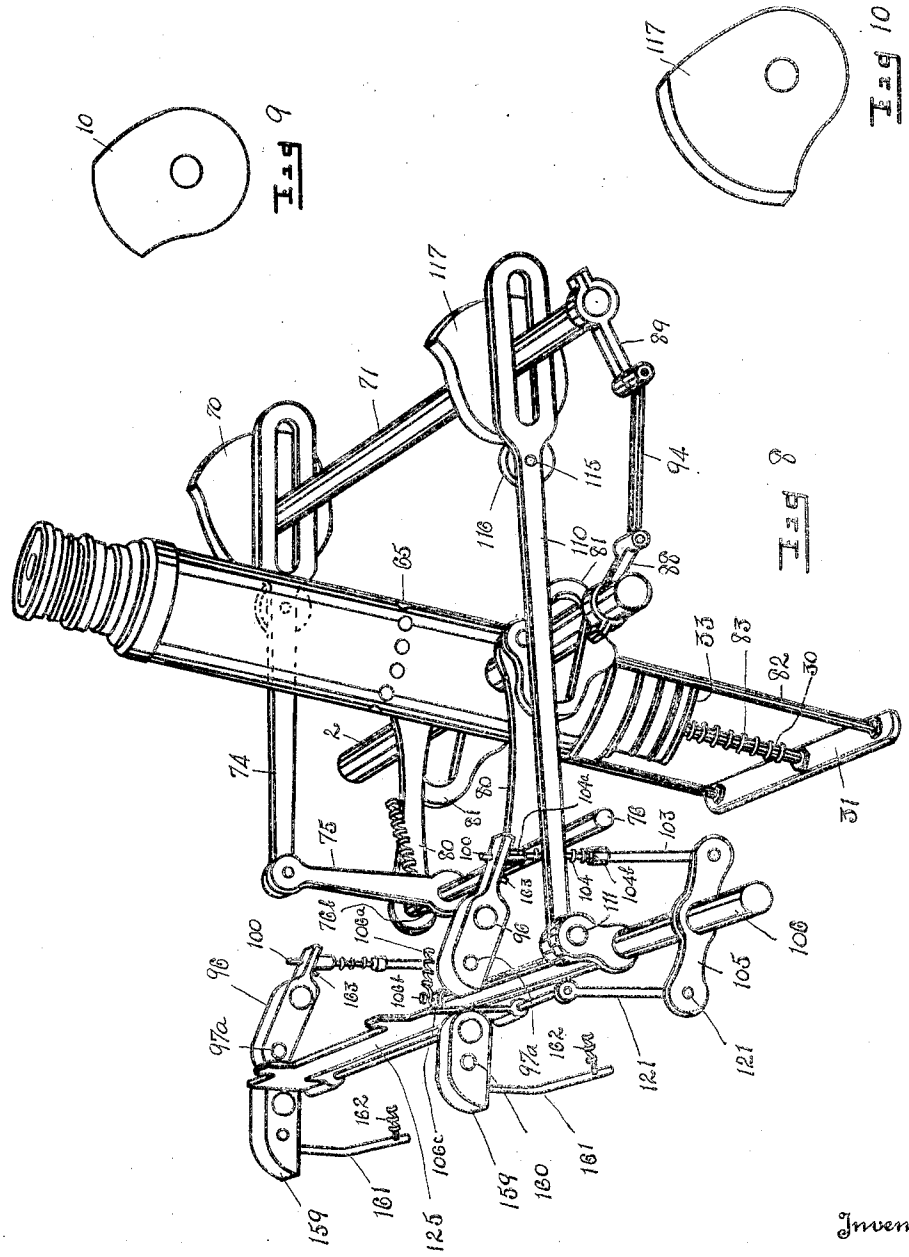

Inventor

Thomas J. Williams

By Thomas L. Wilder

Attorney

May 9, 1933. T. J. WILLIAMS 1,908,094

FEEDER FOR PRINTING PRESSES

Filed May 26, 1930 5 Sheets-Sheet 4

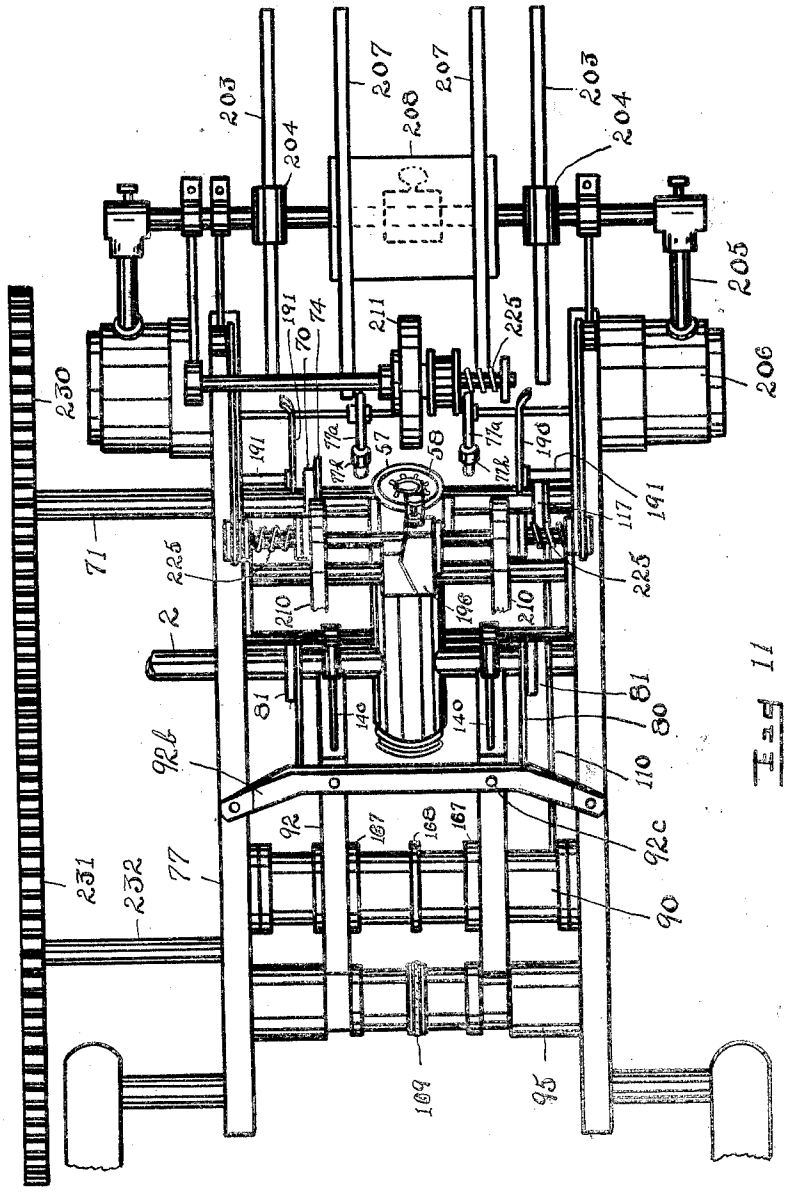

Fig. 11

Inventor

Thomas J. Williams

By Thomas L. Wilder

Attorney

May 9, 1933. T. J. WILLIAMS 1,908,094

FEEDER FOR PRINTING PRESSES

Filed May 26, 1930 5 Sheets-Sheet 5

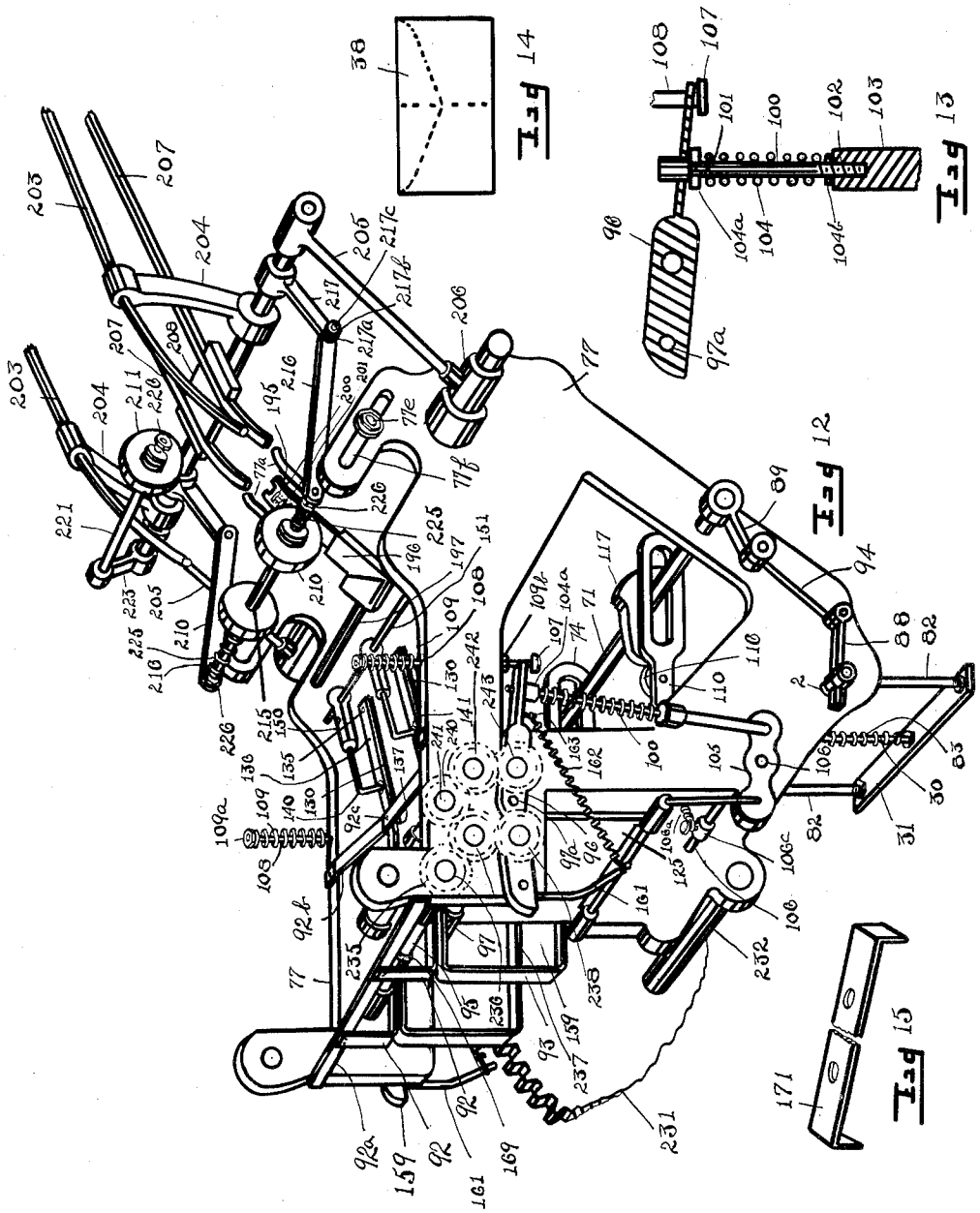

Fig 14

Fig 13

Fig 12

Fig 15

Inventor
Thomas J. Williams
By Thomas L. Wilder
Attorney

Patented May 9, 1933 1,908,094

UNITED STATES PATENT OFFICE

THOMAS J. WILLIAMS, OF CAMDEN, NEW YORK

FEEDER FOR PRINTING PRESSES

Application filed May 26, 1930. Serial No. 455,667.

My invention relates to a feeder for printing presses, and I declare the following to be a full, clear, concise and exact description thereof sufficient to enable anyone skilled in the art to which it appertains to make and use the same, reference being had to the accompanying drawings in which like reference characters refer to like parts throughout the specifications.

The object of the invention is to provide a device that will feed automatically envelopes to a rotary printing machine. Heretofore feeding devices have used a pusher or flap tongue that slips under the flap of the envelope and pushes it into position with the guides of the press. The inherent disadvantage of the flap tongue method of feeding envelopes limits the feeding of the envelopes to one position to the press, namely: flap side of envelope uppermost and flap edge towards the press. Should it be found desirable to feed the flap side down a different type of feeder mechanism must be used. The time necessary to make such a readjustment of parts is considerable. Furthermore, the flap tongue feeder experiences difficulty in feeding envelopes that are warped or those in which the flap happens to be slightly stuck down or is curled. Moreover, the flap type of feeder cannot be operated with any appreciable degree of speed because of the tendency of the flap to stick or become curled as well as the tendency of the flap tongue to cut through and, thereby, throw the envelope out of alignment. Furthermore, the flap type requires a long swing or motion of the flap tongue shaft which limits the speed of the feed as compared with a shorter shaft herein contemplated. Other disadvantages are the smashing of plates by lumps of glue adhering to the envelopes with the usual stops and delays consequent thereto. Still further the envelope supply hopper on the flap type of feeder will hold only a limited number of envelopes, and, therefore, requires constant loading.

The above handicaps have been overcome in the present feeder which embodies a vacuum or an air suction for holding the envelope to the suction tip of the feeder, whereby the envelope can be fed either side up and presenting any edge to the press without any change whatsoever in the mechanism. Moreover, the feeder can be accelerated to accommodate the speed of the printing press and yet deliver the envelopes to the press in perfect register or alignment. Furthermore, the smashing of plates is minimized for any excess spots of glue occurring on envelopes will automatically throw off impression and stop press. Also the capacity of the supply hopper is unlimited for there is provided an automatic device to keep the weight constant in the feeding hopper regardless of the number of envelopes loaded into said supply hopper. The automatic suction used with the feeder is adapted, therefore, to accelerate the speed as well as tend to eliminate spoilage of envelopes and machinery.

The object will be apparent from the drawings in which:

Fig. 1 is a detail view showing a central vertical section, parts being in full and other parts broken away of an envelope transferring member used.

Fig. 2 is a detail view somewhat enlarged showing a perspective view of the head member or suction tip of the member illustrated in Fig. 1.

Fig. 3 is a detail view somewhat enlarged showing a perspective of a valve employed of the member illustrated in Fig. 1.

Fig. 4 is a detail view showing a perspective of a valve employed in the member illustrated in Fig. 1.

Fig. 5 is a detail view showing a perspective of a tube employed in the member illustrated in Fig. 1.

Fig. 6 is an elevation of the feeder showing one of the side members of the frame removed.

Fig. 7 is a detail perspective view showing a certain depressing member employed and immediate parts.

Fig. 8 is a perspective view of the feeder showing the framework removed and other parts omitted.

Fig. 9 is a side elevation of a cam employed.

Fig. 10 is a perspective detail view of another cam employed.

Fig. 11 is a plan view of the feeder showing parts broken away.

Fig. 12 is a perspective view of the feeder showing parts broken away.

Fig. 13 is a detailed enlarged view of a pin and immediate parts used.

Fig. 14 is a plan view of an envelope fed by the device to the printing press.

Fig. 15 is a perspective view of a member employed.

Referring more particularly to the drawings, the feeding device embodies a cylindrical casing 1 through the lower end of which is disposed at right angles a hollow tube 2 that acts as an axle upon which casing 1 rocks. Diametrically opposite openings are made at 3, 3 in tube 2. Said openings 3, 3 are located within casing 1, whereby to allow the air to be withdrawn under suction from the interior of casing 1 through tube 2. A valve seat is formed at 5 by an annular bushing 6 that is held in casing 1 a little above tube 2 by screw bolts 7, 7. Bushing 6 has a central opening at 10 for the passage of the air under suction when not closed by valve 11.

Valve 11 is adapted to slide vertically in casing 1. It is provided with a lubricating fabric washer 12 embedded in a suitable annular recess countersunk in the side wall of the upper portion 13 of valve 11. The upper portion 13 of valve 11 conforms in diameter to the interior of casing 1, whereas the lower portion 14 is reduced considerably in diameter to conform more or less to the opening 10 of bushing 6. An upstanding shaft 15 is made integral with valve 11. Shaft 15 is reduced in size as compared with lower portion 14 of valve 11. It has a central threaded recess 20 into which is screw threaded a headed bolt 21. The head 22 of bolt 21 rests loosely in a socket 23 made in sleeve 24 that fits over shaft 15 and is adapted to slide relative thereto. A removable hard rubber piece 21*a* is disposed in socket 21*b* directly over the head of screw 21, whereby to serve as a bumper for actuating the member thereabove hereinafter described. A lubricating fabric washer 25 is disposed in counter-sunk lateral recess made in shaft 15. A coiled spring 26 is disposed between the upper surface of shaft 15 and the under surface of shoulder 27 formed in sleeve 24, whereby sleeve 24 is forced upward normally on shaft 15 to a predetermined limiting position as determined by the head of bolt 21. The mounting of spring 26 will allow sleeve 24 to yield downward on shaft 15 should it become necessary. Normally sleeve 24 will move up and down with shaft 15 of valve 13.

The means for reciprocating valve 13 embodies a rod 30 that is projected up through casing 1, tube 2 and recess 10 in bushing 6 to be engaged by screw threading into a socket in the lower part 14 of valve 11. The lower end of rod 30 is attached to a cross bar 31 that is in turn actuated by mechanism hereinafter described.

The lower end of casing 1 is enclosed by end member 32 which is screw mounted to casing 1. A central aperture is made through member 32 for the reception of gland 34 and the projection of rod 30. A cap 33 is screw mounted to member 32 and likewise has an aperture for the projection of rod 30. Gland or packing box 34 and cap 33 aid in forming an air tight joint with rod 30.

Sleeve 24 mentioned above has its surface disposed just below thimble shaped member 40 that is adapted to move in a vertical plane. Member 40 is attached by pin 41 to the lower end of hollow tube 42. For this purpose a central recess is made in the base of member 40 for the projection of tube 42. Tube 42 is closed at its lower or base end. Pin 41 extends through alined apertures in the bases of member 40 and tube 42. Furthermore said pin 41 extends somewhat beyond the outer surface of member 40, whereby to project into a slot 45 made in bushing 46 that is held to casing 1 by screw bolts 47. The extended part of pin 41 can move freely in a vertical plane in slot 45 and yet prevent thimble shaped member 40 from turning.

The top of casing 1 is enclosed by a closure member 50 that is screw threaded to casing 1. A fabric washer 51 is used within member 50. The upper part of member 50 is threaded for screw mounting cap 52 to aid in sealing the opening through closure member 50 for tube 42. A packing 53 is employed also for the same purpose.

The upper end of tube 42 is enlarged at 55. The lateral surface of enlarged part 55 is threaded for screw mounting member 56 that in turn is provided with a central opening for screw mounting thereto of sucker tip 57. Sucker tip 57 has a peripheral countersunk recess for the disposition of a rubber washer 58 adapted to aid in forming a hermetically air tight union with the surface of an envelope 38, whereby to hold said envelope in rigid position on said sucker tip 57 during its transit from hopper to feed rolls. The upper surface of sucker tip 57 is concaved at 60 leaving a central unstanding part 59 having elongated apertures 61 through which the air is drawn from the concaved portion 60 down through tube 42.

Sucker tip 57 is adapted to move in a vertical plane, whereby to reach upward to come in contact with the under surface of envelope 38 held in the hopper and thereby carry said envelope 38 in that same plane to the printing press and then return in a lower plane to clear the lowermost envelope 38 in the hopper. In order to retract tip 57 to lowermost position a coiled spring 62 is disposed about tube 42 and held between the lower inner surface

of thimble shaped member 40, and the under surface of washer 51 in cap 50. Coiled spring 62 is made with a little less degree of tension, however, than coiled spring 26 which is within sleeve 24, whereby spring 26 being the last to yield will cause thimble shaped member 40 to move upward with the like motion of sleeve 24. Sleeve 24 will yield, however, first under the weaker tension of spring 62 when thimble shaped member 40 reaches its limiting uppermost position against the under surface of washer 51 within closure member 50 and then under its own spring 26.

A series of apertures 65 is made on a given plane in the side wall of cylindrical casing 1, whereby said apertures 65 will open the chamber in the interior of casing 1 to atmosphere when valve 11 is seated as shown in full lines in Fig. 1 and will be closed when valve 11 is in uppermost position as shown by dotted lines also in said figure.

The mechanism for actuating valve 11 embodies a cam 70 mounted to turn with master or cam shaft 71. Cam 70 is in contact with a roller 72 carried to turn on a stud 73 extending laterally from pitman rod 74 that straddles shaft 71 at one end and is pivoted to rock arm 75 at the other. Arm 75 is mounted to turn with rock shaft 76 carried in bearings made in sides 77, 77 of the frame. Moreover rock shaft 76 is connected indirectly to cross bar 31 by rock arms 80, 80 fixed to turn with shaft 76 and pivoted at their free ends to members 81, 81 that straddle shaft 2. Members 81, 81, are in turn welded or made integral with rods 82, 82 which are connected to cross bar 31. A coiled spring 83 is mounted about rod 30 between cross bar 31 and the lower surface of cap 33, whereby to retract rod 30 and thereby move valve 11 upon its seat 5. This seating of valve 11 will open apertures 65, whereby to release the suction. The means for retracting the rotation of shaft 76 embodies a coiled spring 76*a* fastened at one end to a tight collar 76*b* on shaft 76 and at the other to side 77 of the frame.

The mechanism for rocking cylindrical casing 1 upon hollow shaft 2 as a fulcrum, whereby its sucker tip 57 will carry envelope 38 from hopper 87 to a position between rollers 90, 91 and between upper guides 92, 92 and lower guides 93, 93 and with its forward edge squared against the contiguous surface of stop member 125 as shown by dotted lines in Fig. 6 embodies arm 88 clamped to shaft 2, arm 89 clamped to the end of master shaft 71 and connecting rod 94 pivoted to the free ends of arms 88 and 89. The revolving of arm 89 on master shaft 71 will effect a rocking motion of arm 88 and hollow shaft 2 through the medium of connecting rod 94. Upper guides 92, 92 are connected to cross bar 92*a* which is bolted to sides 77, 77 of the frame and lower guides 93, 93 are connected to cross bar 93*a* which is bolted likewise to sides 77, 77. Furthermore, a bar 92*b* supported on the upper edge of sides 77, 77 of the frame and attached at 92*c*, 92*c* to the upper surface of guides 92 aids to hold the same in place.

Roller 90 is stationary whereas roller 91 is movable in a vertical plane, whereby to allow for the projection of the forward edge of envelope 38 between said rollers 90 and 91.

The mechanism for moving roller 91 upward embodies rock arms 96, 96 which are fulcrumed to side members 77 of the frame at 97*a*, 97*a*. The free ends of arms 96, 96 are reduced in size and provided in each instance with an enlarged aperture for the projection of the upper end of rod 100. Rod 100 is shouldered at 101 and reduced in diameter therebelow. Its lower end is screw threaded at 102 into an aperture made in shaft 103 which in turn is pivoted to one end of yoke 105. The means for allowing rock arms 96, 96 to yield embodies a coiled spring 104 mounted on each of said rods 101 and bearing at its upper end against a loose fitting sleeve 104*a* and at its lower end against a lock nut 104*b* mounted on rod 100. The tension of spring 104 can be determined by the adjustment of rod 100 in shaft 103. Yokes 105 are fixed to rock with shaft 106 carried in members 77, 77 of the frame. Rock shaft 106 is actuated indirectly by master shaft 71 and retracted by coiled spring 106*a* connected at one end to pin 106*b* mounted on collar 106*c* fastened to shaft 106 and at the other to wall 77 of the frame.

Rock arms 96, 96 are limited in each instance in their downward movement by shelves 107 made integral with rods 108 which are mounted to slide in loose bearings in sides 77, 77 of the frame. A coiled spring 109 is mounted on each of said rods 108 between the upper edge surface of side 77 and lock nut 109*a* on the upper end of rod 108, whereby to force rod 108 normally upward to the limit allowed by adjustable nut 109*b* mounted on rod 108 below the lower edge of side 77 of the frame. Shelves 107 will form, therefore, a yielding surface to limit the downward swing of rock arms 96, 96.

The connecting mechanism embodies a pitman 110 that is pivoted at 111 to the arm 112 fixed to rock with shaft 106 and at the other straddles master shaft 71. Pitman 110 carries a laterally extending stud 115 upon which is mounted to turn a roller 116 that bears against cam 117 fixed to revolve with master shaft 71.

The opposite ends of yokes 105, 105 carry upstanding rods 120, 120 pivoted thereto at 121, 121. The upper ends of rods 120, 120 support an envelope stop member 125. Stop member 125 is moved upward between the sets of rollers 90, 91 and 95, 97 whereby to stop and align envelope 38 until lower roller 91 has moved upward into predetermined re-

lation with roller 90. As roller 91 starts to move upward stop member 125 will start to move downward by the reverse rocking of yokes 105, 105.

There is also spring pressed members 130, 130 adapted to hold envelope 38 between guides 92, 92, 93, 93 during the interval that it takes for lower roller 91 to move upward into relation to roller 90. Members 130 are bolted at 135 to the up-bent free ends 136, 136 of upper guides 92, 92. Their free ends 137, 137 are pressed down at the proper interval by the depressing members 140, 140 to hold envelope 38 as stated above. They return under their own tension to full line position illustrated in Fig. 6. The mechanism for pressing the free ends 137, 137 of members 130, 130 embodies said members 140, 140, the lower end of which project through enlarged apertures 141 made in guides 92, 92 and rest upon the upper surface of members 130, 130 near the free ends thereof, whereby the movement of members 140, 140 will effect a corresponding movement of members 130, 130. Each of the members 140 is adjustable and is held in a sleeve 150 that is fixed to rock with shaft 151. Shaft 151 has a loose bearing in the sides 77, 77 of the frame. A crank arm 152 is clamped to the outer end of shaft 151. Link 153 is pivoted to the free end of arm 152, at one end and pivoted to a crank arm 154 at the other. Link 153 is disposed on the outside of said member 77. Crank arm 154 is clamped to rock shaft 155 that has a bearing in side 77. An arm 156 is clamped to the opposite end of rock shaft 155. A stud 157 projects laterally from the free end of arm 156. A roller 158 is mounted to turn on stud 157. Roller 158 rests on cam 70, whereby to transmit the motion engendered by cam 70 to members 140 to effect a periodic synchronous depression of members 130, 130.

The means for permitting roller 97 to yield with respect to its counter roller 95 thereabove, whereby to release envelope 38 should a slug or glue spot occur on said envelope 38 embodies rock members 159, 159 which are pivoted at 160, 160 to sides 77, 77 of the frame. Depending rods 161, 161 are fastened to the free ends of rock members 159, 159. Coiled springs 162, 162 connect the lower end of each of the depending rods 161, 161 to a depending stud 163, 163 in each of rock arms 96, 96 whereby the same coiled springs 162, 162 will serve to hold roller 91 down from its cooperating roller 90 and 97 up against the cooperating roller 95. Furthermore each of the sets of rollers, namely 90, 91 and 95, 97 are grooved to allow clearance for guide, 92, 92 and 93, 93. Ridges 167, 167 are made sufficiently wide to carry envelope 38. Furthermore, central ridge 168 on upper roller 90 is a little larger in diameter than the ridges 167, 167, whereby to make closer contact with the middle portion of envelope 38 and thereby aid in aligning or squaring the same. Perforating members 169, 169 are formed on rollers 95, 97 whereby to effect a perforation through the middle of envelope 38. This is desirable especially in so called duplex envelopes.

Hopper 87 embodies base pieces 170, 170 supported by member 171 bent at right angles at each end and attached to sides 77, 77 of the frame; rear rods *77a*, *77a* suspended in place by clamping sleeves *77b*, *77b* that make a tight fit with rods *77a*, *77a*. Sleeves *77b*, *77b* only partially surround rods *77a*, *77a*, whereby to allow the front surface of said rods *77a*, *77a* free for the passage of the edges of envelopes 38. Each of the sleeves *77b*, *77b* is provided with a rearwardly extending member *77c* having an aperture *77d* to allow for mounting on adjustable shaft *77e* that is carried in elongated apertures *77f* formed in sides 77, 77 of the frame. Winged set nuts *77g* are screw mounted to members *77c* and adapted to engage the surface of shaft *77e* to hold sleeves *77b* at any predetermined angle to said shaft *77e*. The lower end of each of the rods *77a* has mounted thereto an adjustable shoe *77h* to aid in supporting envelopes 38. There are also side guides 190, 190, that are mounted on short shafts 191, 191 extending from bearings in sides 77, 77 of the frame. Front guide member 195 is made adjustable and mounted in a retaining groove in member 196 which is carried on shaft 197 having bearings at either end in sides 77, 77 of the frame. Bolt 200 is screw mounted to member 196 and has a ring 201 formed integral therewith. Ring 201 engages an aperture in guide member 195, whereby the turning of bolt 200 will move guide 195 correspondingly.

A stationary rubber roller 198 is held by a clamp 199 to the lower edge of front guide member 195, whereby to allow only one envelope 38 at a time to be extracted from hopper 87. A raceway is formed by rods 203, 203, supported by brackets 204, 204 mounted on shaft 202, carried by other brackets 205, 205 that are supported on trunnions 206, 206 extending from sides 77, 77 of the frame. There are also lower rods 207, 207 mounted on adjustable plate 208 which is clamped to shaft 202.

In order to keep the weight of the envelopes 38 in hopper 87 constant, there is employed three rollers 210, 210 and 211 made of some soft spongy rubber composition and adapted to make contact with the edges of envelopes 38 as they descend in hopper 87. Each of the rollers 210 is mounted to turn on shaft 215. Shaft 215 is supported at either end by two sets of brackets 216 and 217. Brackets 216 and 217 in each set are united at 218 by a friction joint to allow for adjustment. To this end a set screw *217a* mounted

in collar 217*b* of bracket 217 engages laterally projecting stud 217*c* formed integral with bracket 216. Roller 211 is mounted on shaft 221 that is suspended by bracket 223 which in turn is clamped to shaft 202. Each of rollers 210, 210 and 211 is spring pressed to govern the velocity of revolution thereof. Said springs 225 bear at one end against the hub of each of said rollers 210, 210 and 211 and at the other against an adjustable nut 226 mounted on the respective shaft, whereby to govern the degree of tension of said spring. This spring pressure against said rollers 210, 210, 211 compels them to turn slowly and thereby checks the fall of envelopes 38 in hopper 87. This function of rollers 210, 210, 211 will compensate for the continual withdrawal of envelopes 38 from the lower part of hopper 87 and thereby effect a constant pressure of said envelopes 38 in that part of said hopper 87.

The feeding mechanism is timed to act synchronously with the running of the printing press, to this end, master shaft 71 has fixed to turn therewith a spur gear 230 that is in mesh with an intermediate or idler spur gear 231 revolving loosely on shaft 232 supported by one of the sides 77 of the frame. Idler gear 231 is in mesh with another spur gear, not shown, that revolves with the printing press.

Likewise the sets of rollers 90, 91 and 95, 97 are revolved synchronously with the printing press and to this end a spur gear 235 which is in mesh with a spur gear, not shown, on the printing press, is used to effect a rotation of rollers 90, 91 and 95, 97. Spur 235 is mounted to revolve idly on a stud or short shaft 236 projecting laterally from the adjacent side 77. Spur gear 235 is in mesh with spur gear 237 which is fixed on the end to turn with roller 95. Likewise spur gear 237 is in mesh with spur gear 238 fixed on the end to turn with roller 97. The rotation of rollers 95 and 97 will be in opposite directions, whereby to advance envelope 38 therebetween. A corresponding rotation of rollers 95, 97 is effected with respect to rollers 90, 91 by employing idler spur gear 240 mounted to rotate on a stud 241 projecting laterally from the contiguous side 77 of the frame. Idler spur gear 240 is in mesh with spur gear 242 mounted on the end of roller 90 and adapted to rotate therewith. Spur gear 242 is in mesh with spur gear 243 mounted on the end and adapted to turn with roller 91.

The operation of the suction feeder device may be described as follows: In the full line position Fig. 6 of cylindrical casing 1, valve 11 will be moved upward, whereby to close apertures 65 and thereby create a suction at sucker tip 57 through elongated apertures 61 therein down tube 42, out through apertures 43 of tube 42 and 63 of thimble shaped member 40 down channel 85, holes 16 in upper part 13 of valve 11 and out openings 3, 3 in tube 2 to vacuum pump. This suction will draw envelope 38 with flat surface upon sucker tip 57 and hold it thereon while casing 1 moves to dotted line position shown in Fig. 6 and then delivers the envelope between rollers 90, 91 and against stop member 125, whereby it is aligned so as to proceed between guides 92, 92 and 93, 93 and reach the printing press, not shown, with its forward edge in squared relation thereto.

Just before sucker tip 57 has reached the end of its delivery stroke the suction will be released by valve 11 in casing 1 moving down to uncover apertures 65. The release of the suction just before suction tip 57 has reached its ultimate delivery position illustrated in dotted lines in Fig. 6 will free envelope 38 and allow the last part of delivery stroke to square the edge thereof against the surface of stop member 125. Thereupon the free ends 137, 137 of members 130, 130 will be moved down against the upper surface of envelope 38 by members 140, 140 to hold it in correct position during the subsequent interval necessary for roller 91 to move upward and stop 125 to move downward out of the path of envelope 38 which movements are affected by rock yokes 105, 105. When roller 91 has moved upward to engage envelope 38 between upper roller 90 and itself, ends 137 of members 130 will be released and automatically spring upward from envelope 38. The rotation of said rollers 90 and 91 will force envelope 38 along guides 92, 93 to rollers 95, 97 which in turn will feed it to the printing press not shown.

In the meantime after sucker tip 56 has delivered envelope 38 against stop 125 and before roller 91 has moved upward, it will begin to move down under the influence of cam 70 to which it is indirectly connected. Upon reaching its lowermost position illustrated in Fig. 1 casing 1 will begin to rock back to full line position illustrated in Figs. 6 and 7 under the influence of master shaft 71 to which it is indirectly connected by arms 88, 89 and connecting rod 94.

In this position shaft 76 will reverse its direction of rocking and thereby through its connection by means of arms 80, 80 cross bar 31, rod 30, valve 13 will again move upward and, thereby cause sucker tip 57 to move upward to reach the next envelope 38 in hopper 87. This upward movement of valve 13 will close apertures 65 in casing 1. The closing of apertures 65 will effect a suction through sucker tip 57 as heretofore described, whereby to draw the next succeeding envelope 38 firmly thereto and hold it thereupon while casing 1 rocks to delivery position. As casing 1 starts towards delivery position it will slip envelope 38 from beneath adjustable roller 198 of the hopper 87. The like motions will be repeated each time an envelope 38 is

withdrawn from hopper 87 and delivered to rollers 90, 91.

Having thus described my invention what I claim as new and desire to secure by Letters Patent is as follows:

1. In a feeder for printing presses, a hopper for holding envelopes, rollers for passing the envelope to a printing press, a rock member for transferring the envelope from the hopper to said rollers, means for permitting one of the rollers to move relative to the other, whereby to allow for the projection of the envelope therebetween, a member for holding said envelope while said rollers are separated and a member cooperating with said rollers, whereby to align said envelope as it passes between said rollers.

2. In a feeder for printing presses, a rock casing, a movable valve disposed within said casing and a movable tip actuated by said valve, whereby to hold and carry an envelope and means for actuating said valve.

3. In a feeder for printing presses, a hopper for holding envelopes, means for moving said envelopes toward a printing press and a rock member having a spring retracted movable tip for transferring said envelopes from the hopper to said first named means.

4. In a feeder for printing presses, a hopper for holding envelopes, means for keeping the weight of said envelopes in said hopper constant, roller means for passing the envelopes, means on one of said rollers to aid in alining the envelopes, a rock member for transferring said envelopes from said hopper to said roller means, and a movable tip connected to said rock member, whereby to hold said envelopes during said transference.

5. In a feeder for printing presses, a hopper for holding envelopes, revolving members for moving said envelopes, one of said members enlarged to aid in speeding the movement of said envelopes, whereby to square the edges thereof, a rock member for transferring the envelopes from the hopper to said revolving members and means for permitting said revolving members to yield with respect to each other, whereby to prevent said envelopes from clogging the feeder.

6. In a feeder for printing presses, a hopper for holding envelopes, means for controlling the weight of the envelopes in said hopper, and a rock member having a movable tip for holding and carrying the envelopes from the hopper toward the printing press.

7. In a feeder for printing presses, a hopper for holding envelopes, rollers for passing the envelopes, a rock member having a movable tip for transferring the envelopes from the hopper to said rollers, means for permitting said rollers to separate, whereby to allow the envelopes to be fed therebetween and spring means for temporarily holding said envelopes while said rollers are separated.

8. In a feeder for printing presses, a hopper for holding envelopes, rollers for keeping the weight of the envelopes in said hopper constant, two sets of rollers for passing the envelopes to the printing press, a rock member having a movable tip for transferring the envelopes from the hopper to said rollers, means for separating the rollers of one set, whereby to allow for the projection of the envelopes therebetween and other means for holding said envelopes in predetermined position while said rollers are separated.

9. In a feeder for printing presses, a hopper for holding envelopes, rollers for passing the envelopes, a rock member having a movable tip for transferring the envelopes from the hopper to said rollers and a vertically movable member for squaring said envelopes as they pass between said rollers.

10. In a feeder for printing presses, a hopper for holding envelopes, means for controlling the pressure of the envelopes in the hopper, roller means for passing the envelopes, means on one of said rollers to aid in alining the envelopes, a rock member for transferring said envelopes from said hopper to said roller means, and a movable tip connected to said rock member, whereby to hold said envelopes during said transference.

11. In a feeder for printing presses, a rock member adapted to carry an envelope, movable suction means mounted on said rock member for holding said envelope, a piston mounted in said rock member for controlling said suction and means for actuating said rock member in unison with said piston.

12. In a feeder for printing presses, a rock member for carrying an envelope, spring retracted movable suction member connected with said rock member for holding said envelope in transit, a piston mounted in said rock member for controlling said suction and means for actuating said rock member in unison with said piston.

13. In a feeder for printing presses, a rock member for carrying an envelope, yielding movable suction tip connected to said rock member, whereby to hold said envelope while in transit, a piston for releasing said suction to free said envelope and a shaft for actuating said rock member in unison with said piston.

In testimony whereof I have affixed my signature.

THOMAS J. WILLIAMS.