The Commissioner of Patents
PO Box 200
WODEN ACT 2606

F B RICE & CO
SYDNEY NSW
Speed Dial 511

PATENTS

Our Ref: 74888

AUSTRALIA
Patents Act 1990
PATENT REQUEST: STANDARD PATENT

We, RHEON AUTOMATIC MACHINERY CO LTD being the person(s) identified below as the Applicant, request the grant of a standard patent to the person identified below as the Nominated Person, for an invention described in the accompanying complete specification.

Full application details follow.

Applicant and Nominated Person:	RHEON AUTOMATIC MACHINERY CO LTD a Japanese company
Address:	2-3 Nozawa-machi, Utsunomiya-shi, Tochigi-ken Japan
Invention Title:	Method and apparatus for joining and supplying separated dough blocks
Name(s) of Actual Inventor(s):	Michio MORIKAWA
Address for Service in Australia: Attorney Code: RI	F B RICE & CO 28A Montague St BALMAIN NSW 2041

BASIC CONVENTION APPLICATION(S) DETAILS

Application No	Country	Country Code	Date of Application
8-19440	Japan	JP	9 January 1996

Drawing number recommended to accompany the abstract: Fig 1

Dated this sixth day of January 1997

RHEON AUTOMATIC MACHINERY CO LTD

By: _____

CHRIS OWENS
Registered Patent Attorney

NEW/CO/lls/131

8072427 06JAN97

680175

AUSTRALIA

Patents Act 1990

NOTICE OF ENTITLEMENT

I (We) Torahiko Hayashi

authorised by Rheon Automatic Machinery Co., Ltd.

of 2-3 Nozawa-machi, Utsunomiya-shi, Tochigi-ken, JAPAN

the applicant and nominated person in respect of an application for a patent for an invention entitled Method And Apparatus For Joining And Supplying Separated Dough Blocks

filed under Australian Application No. 10042/97, state the following:

PART 1 - *Must be completed for all applications.*

The person(s) nominated for the grant of the patent

☐ ~~is (are) the actual inventor(s)~~

or

☒ has, for the following reasons, gained entitlement from the actual inventor(s)

The nominated person is the assignee of the invention from the said actual inventor

---

PART 2 - *Must be completed if the application is a Convention application.*

The person(s) nominated for the grant of the patent is ~~(are)~~:

☒ the applicant(s) of the basic application(s) listed on the patent request form

or

☐ ~~entitled to rely on the basic application(s) listed on the patent request form by reason of the following:~~

The basic application(s) listed on the request form is ~~(are)~~ the first application(s) made in a Convention country in respect of the invention.

PART 3 - ~~*Must be completed if the application was made under the PCT and claims priority.*~~

The person(s) nominated for the grant of the patent is (are):

☐ the applicant(s) of the application(s) listed in the declaration under Article 8 of the PCT

or

☐ entitled to rely on the application(s) listed in the declaration under Article 8 of the PCT by reason of the following:

The basic application(s) listed in the declaration made under Article 8 of the PCT is (are) the first application(s) made in a Convention country in respect of the invention.

Dated this 19th day of November 19 96

Signed Torahiko Hayashi Status Representative Director

Signatory's Name TORAHIKO HAYASHI

F.B. RICE & CO PATENT ATTORNEYS

FBR/9-93/P1

AU9710042

(12) PATENT ABRIDGMENT (11) Document No. AU-B-10042/97
(19) AUSTRALIAN PATENT OFFICE (10) Acceptance No. 680175

(54) Title
METHOD AND APPARATUS FOR JOINING AND SUPPLYING SEPARATED DOUGH BLOCKS

International Patent Classification(s)
(51)[6] A21C 009/00

(21) Application No. : 10042/97 (22) Application Date : 06.01.97

(30) Priority Data

(31) Number	(32) Date	(33) Country
8-19440	09.01.96	JP JAPAN

(43) Publication Date : 17.07.97

(44) Publication Date of Accepted Application : 17.07.97

(71) Applicant(s)
RHEON AUTOMATIC MACHINERY CO LTD

(72) Inventor(s)
MICHIO MORIKAWA

(74) Attorney or Agent
F B RICE & CO , 28A Montague Street, BALMAIN NSW 2041

(56) Prior Art Documents
AU 52018/96 A21C 3/02
EP 386988
EP 211669

(57) Claim

1. An apparatus for joining dough blocks to each other comprising horizontally and oppositely positioned pairs of rollers being provided in a plurality of tiers, the rollers being rotatable and arranged such that the distances between the upper roller pairs are sequentially greater than the distances between the lower roller pairs, the distances between the roller pairs being increased or decreased when dough blocks are supplied between the roller pairs, so that the rollers provide pressure to the dough blocks or release pressure from the dough blocks as the dough blocks are impelled below by the pressing and releasing effects and the rotations of the rollers, whereby the growth of gluten and the joining of gel structures of the dough blocks are accelerated, and whereby a continuous belt-like dough sheet is made.

AUSTRALIA

Patents Act 1990

RHEON AUTOMATIC MACHINERY CO LTD

ORIGINAL

COMPLETE SPECIFICATION
STANDARD PATENT

Invention Title:

Method and apparatus for joining and supplying separated dough blocks

The following statement is a full description of this invention including the best method of performing it known to us:-

Background of Invention

1. Field of Invention

This invention relates to a method and an apparatus for joining separated dough blocks to each other, and supplying a continuous sheet of dough. Especially, this invention relates to a method and apparatus for joining a following kneaded dough block to another kneaded dough block that was supplied before the following dough block was supplied, so as to join the gel structures of these dough blocks to each other when a plurality of kneaded dough blocks are supplied to a production line.

2. Prior Art

In a conventional apparatus, a dough sheet is made of a kneaded dough block, and then parts of the sheet are cut away from the dough sheet for production. Each dough sheet has a volume corresponding to the volume of the kneaded dough block supplied for each supplying operation of materials. The entire dough sheet is in one production lot, or each part of the dough sheet is in a production lot. When one dough sheet is in a production lot, time is lost between the adjacent dough sheets when they are fed by a conveyor. Also, fragments remain after parts are cut away from the dough sheets for production.

In a conventional apparatus, if necessary dough sheets are joined to each other by a manual operation. That is, a rear end of a dough sheet is piled on

a front end of another dough sheet, and then the piled ends are manually pressed so as to have them adhere to each other. There is no apparatus to join dough sheets to each other. Thus, the operation must be done whenever a following dough sheet is supplied, so that much manual work is needed to perform the joining operation of dough sheets. In a production line of a bread, unmanned production is usually performed to make bread from dough sheets that have the same conditions in their degree of composition and kneading, because technology to make a thin dough sheet has been improved and is now broadly used. However, when many kinds of breads that have several shapes and additions, such as a filling, are made on the same production line, much manual work is needed to join dough sheets whenever a following dough sheet is supplied.

A unit of gel structure is formed for each dough block that is made by a mixing operation. Thus, for each lot, a gel structure in a dough block is separated from that in another dough block, so that fragments of the dough blocks remain after parts are cut away from them. There is no apparatus to automatically join gel structures in dough blocks to each other.

Summary of Invention

This invention aims to overcome the disadvantages in the prior art. It provides a method and apparatus to automatically join a following dough block to a dough block previously provided, so that a very long and continuous dough sheet is automatically made, and so that thus unmanned production is achieved over 24 hours.

This invention allows gel structures of dough blocks to be automatically joined to each other. This invention also allows several kinds of breads to be

produced during a non-stop production step. In a conventional apparatus there are many production lots corresponding to the mixing operations of the dough. This invention allows a continuous dough sheet corresponding to one production lot to be made. Thus, this invention allows the segments of dough sheets to be minimized. Also, this invention allows the time until a following dough sheet is received to be minimized.

One object of this invention is to provide a method and apparatus for joining dough blocks to each other. The apparatus comprises horizontally and oppositely positioned pairs of rollers being provided in a plurality of tiers. The rollers are rotatable and arranged such that the distances between the upper roller pairs are sequentially greater than the distances between the lower roller pairs. The distances between the roller pairs are increased or decreased when dough blocks are supplied between the roller pairs, so that the rollers provide pressure to the dough blocks or release pressure from the dough blocks as the dough blocks are impelled below by the pressing and releasing effects and the rotations of the rollers. Thus, the growth of gluten and the joining of gel structures of the dough blocks are accelerated, and a continuous belt-like dough sheet is made.

The method uses horizontally and oppositely positioned pairs of rollers being provided in a plurality of tiers. The rollers are rotatable and arranged such that the distances between the upper roller pairs are sequentially greater than the distances between the lower roller pairs. The method comprises a step for changing the distances between the roller pairs such that the distances are increased or decreased when dough blocks are supplied between the roller pairs, so that the rollers provide the pressure to and release the pressure from the dough blocks as they are impelled below by the pressing and releasing effects and the rotations of the rollers, whereby the growth of

gluten and the joining of gel structures of the dough blocks are accelerated, and whereby a continuous belt-like dough sheet is made.

Brief Description of the Drawings

Fig. 1 is a schematic side view of a bread production apparatus that includes an embodiment of an apparatus for joining dough blocks to each other according to this invention.

Fig. 2 is an enlarged schematic side view of the embodiment of the apparatus for joining dough blocks to each other as in Fig. 1.

Figs. 3 and 4 are schematic side views to explain operations of the embodiment of the apparatus in Fig. 2.

Fig. 5 is a schematic side view of another embodiment of the apparatus for joining dough blocks to each other.

Description of the Preferred Embodiment

Fig. 1 shows a bread-making apparatus that includes an apparatus 1 for joining dough blocks to each other. A bowl 2 mixes and kneads materials to make dough. Dough 4 is supplied from the bowl 2 on a conveyor or a dough feeder 3. The dough feeder 3 feeds the dough, and then supplies it to the joining apparatus 1 in response to signals from a sensor 21 (see Fig. 2). The joining apparatus joins dough blocks to each other to provide a continuous and long belt-like dough 7 from a bottom opening on a first conveyor 8. The dough is not separated. The first conveyor 8 feeds the dough 7 to a dough-extending apparatus 9. The extending apparatus 9 presses and extends the

dough 7 to make a dough sheet 10 that has a predetermined thickness and width that are required to make desired breads. The dough-extending apparatus 9 feeds the dough sheet 10 to a conveyor 11. A depositing apparatus 12 is located above the conveyor 11 so as to supply a filling such as jam and meat, on the dough sheet 10. A cutting apparatus 13 is positioned over the conveyor 11. It moves vertically such that the dough sheet 10 is cut to pieces, each of which pieces has a desired length and width. Also, the cutting apparatus 13 may provide desired shapes to the pieces. Then resulting dough pieces 14 are continuously output from the cutting apparatus 13.

Fig. 2 is an enlarged view of a part of Fig. 1. A hopper 22 is positioned at the forward end of the dough feeder 3. Rotatable cutter blades 5 are positioned at a bottom opening of the hopper 22. The joining apparatus 1 is located under the opening of the hopper 22. A sensor 21 is positioned near an upper opening of the joining apparatus 1, and senses whether dough in the joining apparatus decreases to such an extent that the upper surface of the dough is below a predetermined level in the joining apparatus 1. When the sensor 21 senses the surface of the dough in the joining apparatus 1 being below a predetermined level, it outputs a signal, so that the dough feeder 3 is operated to feed the dough 4 into the hopper 22. Simultaneously the dough cutter blades 5 rotate. When the dough 4 is supplied from the dough feeder 3 to the hopper 22, a dough block 6 is cut out from the dough 4 by the blades 5 at the bottom opening, which block thus has a certain volume. The dough block 6 falls into the joining apparatus 1. As a result, the dough 4 can be kept at a predetermined level in the joining apparatus 1.

The joining apparatus includes a group 20 of rollers 23, 24, 25, and 26 and a group 20' of rollers 23', 24', 25', and 26'. The cross-sectional shape of each

roller is cylindrical. The row of rollers 23-26 and the row of rollers 23'-26' are arranged like a "V." Each roller of each group is opposite a corresponding roller of the other group in a horizontal plane. Opposite roller pairs in respective horizontal planes are rotated in opposite directions. Each roller is rotated by a suitable driving means (not shown). Each roller reciprocally swings or reciprocally and linearly moves. Thus, the rollers in an opposite roller pair can be moved to recede from or approach each other in a horizontal plane, so that the gaps between them are increased or decreased. When the opposite rollers approach each other, the dough between them is pressed by them. When the opposite rollers recede from each other, the pressure is removed from the dough.

The circumferential speeds of the lower rollers of the groups are lower than those of the upper rollers of the groups. However, the circumferential speeds of all of the rollers may be the same. Also, the speeds of the rollers of one group may differ from those of the rollers of the other.

When the rollers in an opposite roller pair are moved to recede from and approach each other, and they rotate at predetermined speeds, the dough is repeatedly pressed or released from the pressure. As a result, the gluten in the dough increases and the gel structures of the dough blocks are joined to each other.

Fig. 3 shows the joining apparatus 1, in which the circumferential speeds of the lower rollers of the groups are lower than those of the upper rollers. For, example, the speeds of the rollers 25, 25', and 26, 26' are lower than those of the rollers 23, 23' and 24, 24'. Parts of the surfaces of each dough block 6 that contact the upper rollers 23, 23', and 24, 24' are drawn below as they rotate. Then, the parts and/or other parts of the surface of each dough block

6 that contact the lower rollers 25, 25', and 26, 26' are drawn to the bottom of the contacting apparatus as they rotate. Thus, the parts of the dough block 6 that contact the upper rollers flow faster than those that contact the lower rollers.

However, parts of each dough block 6 in the middle between the opposite roller pairs, which parts do not contact any roller, flow faster than the parts that contact the rollers. This is because the pressures caused by the opposite roller pairs in each dough block 6 when they approach each other give force to the dough blocks so that they move to the bottom opening, rather than the dough blocks being drawn by the rotations of the rollers 23, 23', 24, 24', 25, 25', 26, and 26'. Thus, as shown in Fig. 3, parts of each dough block 6 that do not contact the rollers and that are generally positioned at the middle between each opposite roller pair flow faster than those that contact the rollers.

In detail, a surface of a dough block 6 is generally kept flat when the dough block is supplied from the hopper 22 on the top dough block stacked in the joining apparatus 1. As the dough block is drawn into the inside of the joining apparatus, the surface of the dough block 6 that contacts the upper surface of the lower dough block falls at the mid-point between the opposite roller pair towards the inside of the lower dough block to be shaped as a V-shaped layer. This V-shaped layer is gradually elongated below, so that the surfaces of adjacent dough blocks that contact each other are increased. Then, the layer extends longitudinally. Simultaneously, the roller pairs move to approach, and recede from, each other, to press the dough block and release the pressure from the dough block, so that the contacted surfaces are vibrated by the motions of the rollers. As a result, the adhesion between the contacted surfaces of the adjacent dough blocks is increased. Also, the receding and approaching movements of the rollers function as a tapping

motion on the dough blocks, resulting in generating a thixotropy effect. Thus, the flowage of the dough is increased and the joining of the gluten in the dough is accelerated. Then, the joining apparatus 1 supplies a continuous and belt-like dough sheet 7 to the first conveyor 8.

Fig. 4 shows the joining apparatus 1, in which the circumferential speeds of the rollers of one group differ from those of the rollers of the other group. That is, the circumferential speeds of the rollers 23, 24, 25, and 26 of the group 20 are faster than those of the rollers 23', 24', 25', and 26' of the group 20'. As a result, as shown in this figure, the parts of each dough block 6 that contact the rollers 23, 24, 25, and 26 are drawn down faster by these rollers than the parts of each dough block 6 that contact the rollers 23', 24', 25', and 26'. Thus, each separated dough block 6 is modified to long continuous dough layers. The receding and approaching movements of the rollers from and to the dough layers are carried out so that adhesion of the dough is increased. Then, the joining apparatus 1 supplies a continuous and belt-like dough sheet 7 to the first conveyor 8.

Fig. 5 shows another embodiment, namely, 1', of the joining apparatus 1 as in Fig. 1. It includes a group 50 of rollers 51, 52, 53, and 54 and the group 20' of the rollers 23', 24', 25', and 26'. The cross-sectional shape of each roller of the group 20' is hexagonal. These hexagonal rollers impel the dough more strongly than do the cylindrical rollers, so that each separated dough block 6 is modified more effectively to long continuous dough layers along the longitudinal direction of the flow of the dough. The long continuous dough layers extending in the longitudinal direction of the flow of the dough have wide contacting areas to contact each other. Thus, the thixotropy effect is caused, resulting in the unity of the gel structures of the dough layers.

Polygonal rollers may be used for the sectional shape of the rollers. Also, polygonal rollers may be used for the upper rollers of the joining apparatus in Fig. 1, so that the same effects as is the case as in Fig. 4 can be generated.

In the above embodiments, either or both of the group 20' of the rollers 23', 24', 25', and 26' and the group 20 of the rollers 23, 24, 25, and 26 or either or both of the group 20' of the rollers 23', 24', 25', and 26' and the group 50 of rollers 51, 52, 53, and 54 is/are reciprocally swung or linearly and reciprocally moved. However, this invention is not limited to these configurations. For example, the distances between the opposite roller pairs may be changed so that their pressing movements are sequentially generated between them from above downwards. Also, the distances between the opposite roller pairs may be alternately changed in the vertical direction such that the pressing movements between the opposite roller pairs are alternately effected in the vertical direction.

By this invention gel structures in respective dough blocks can be joined to each other by repeatedly providing pressing and vibrating operations to the dough blocks, so that the dough blocks are deformed and piled upon each other to form layers. Thus, a continuous belt-like dough web can be made.

THE CLAIMS DEFINING THE INVENTION ARE AS FOLLOWS:-

1. An apparatus for joining dough blocks to each other comprising horizontally and oppositely positioned pairs of rollers being provided in a plurality of tiers, the rollers being rotatable and arranged such that the distances between the upper roller pairs are sequentially greater than the distances between the lower roller pairs, the distances between the roller pairs being increased or decreased when dough blocks are supplied between the roller pairs, so that the rollers provide pressure to the dough blocks or release pressure from the dough blocks as the dough blocks are impelled below by the pressing and releasing effects and the rotations of the rollers, whereby the growth of gluten and the joining of gel structures of the dough blocks are accelerated, and whereby a continuous belt-like dough sheet is made.

2. An apparatus for joining dough blocks to each other of claim 1 wherein the circumferential speeds of the rollers are the same, or the circumferential speeds of the lower rollers are lower than those of the upper rollers.

3. An apparatus for joining dough blocks to each other of claim 1 wherein the circumferential speeds of the rollers that are positioned vertically within one group differ from those of the rollers that are positioned vertically within the other group.

4. An apparatus for joining dough blocks to each other of claim 1 wherein the sectional shapes of some of the rollers are cylindrical.

5. An apparatus for joining dough blocks to each other of claim 1 wherein the

sectional shapes of some of the rollers are polygonal.

6. An apparatus for joining dough blocks to each other of claim 1 wherein the sectional shapes of some of the rollers are cylindrical and polygonal.

7. An apparatus for joining dough blocks to each other of claim 1 wherein a cutter means is provided near an inlet opening of the apparatus so as to cut out a dough block from a dough mass, which dough block has a fixed volume.

8. An apparatus for joining dough blocks to each other of claim 1 wherein a sensor means is provided to sense a level of dough in the apparatus and to provide a signal, and wherein the cutter means provides a dough block in response to the signal.

9. A method for joining dough blocks to each other using horizontally and oppositely positioned pairs of rollers that are provided in a plurality of tiers, the rollers being rotatable and arranged such that the distances between the upper roller pairs are sequentially greater than the distances between the lower roller pairs, characterized by a step for changing the distances between the roller pairs such that the distances are increased or decreased when dough blocks are supplied between the roller pairs, so that the rollers provide pressure to the dough blocks and release pressure from the dough blocks as the dough blocks are impelled below by the pressing and releasing effects and the rotations of the rollers, whereby the growth of gluten and the joining of gel structures of the dough blocks are accelerated, and whereby a continuous belt-like dough sheet is made.

DATED THIS 6 day of January 1997

RHEON AUTOMATIC MACHINERY CO.. LTD.
Patent Attorneys for the Applicant:-
F B RICE & CO

FIG. 1

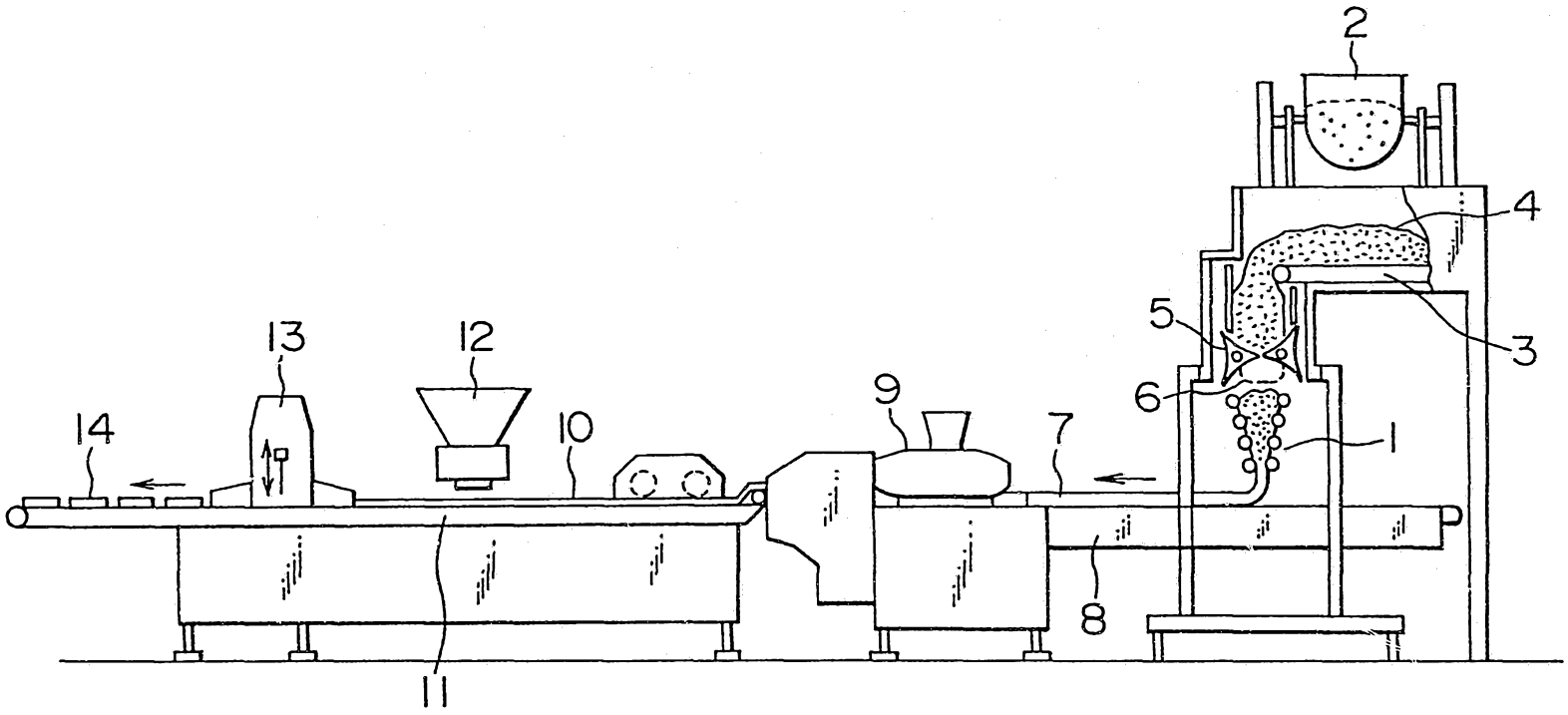

FIG. 2

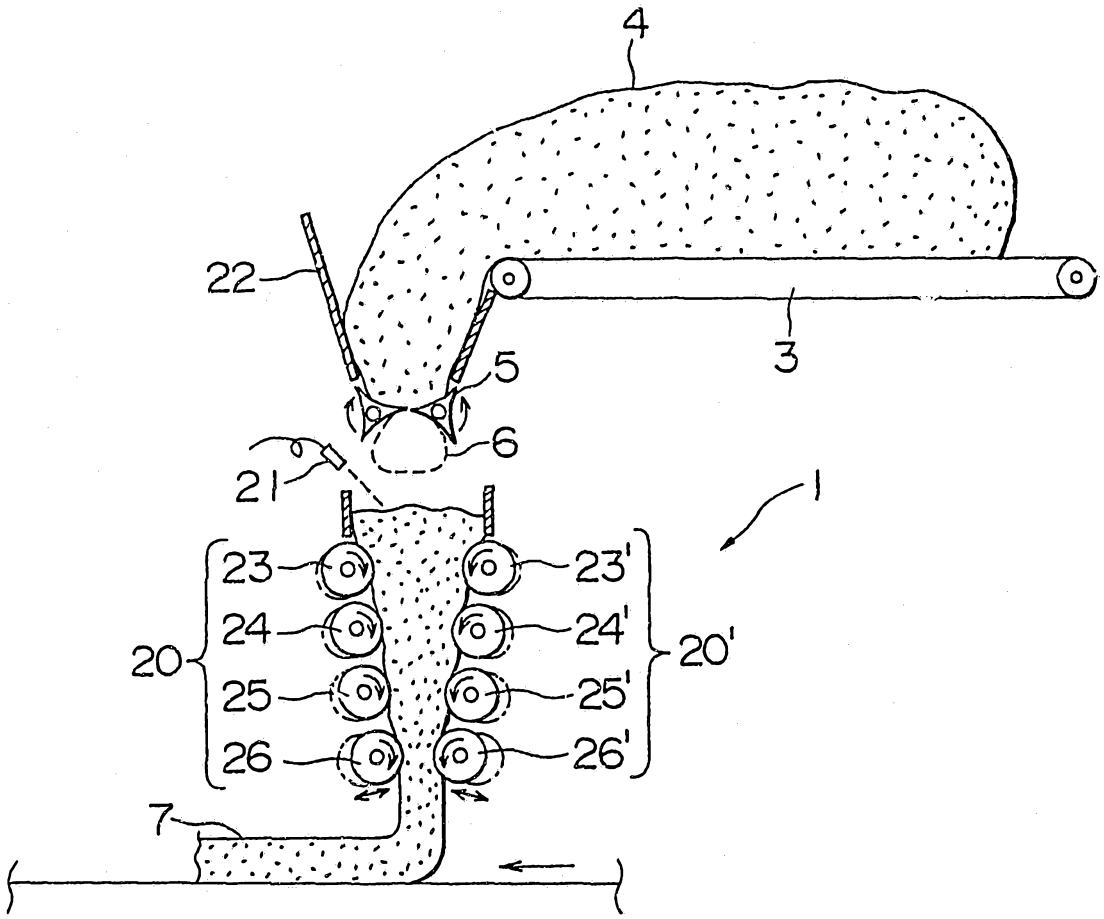

FIG. 3

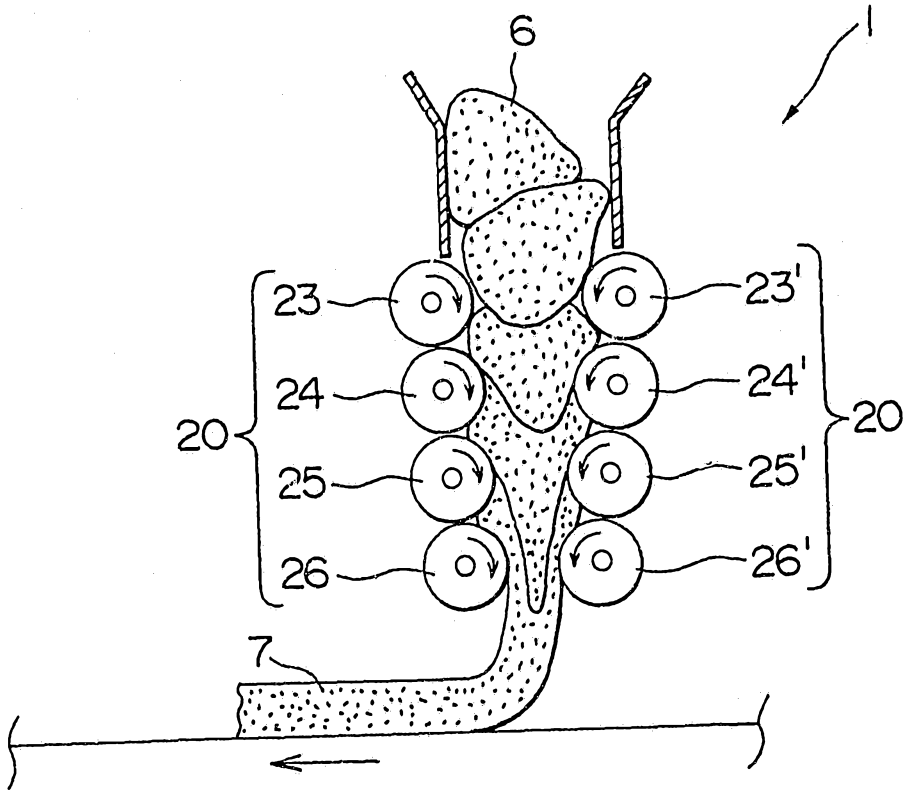

FIG. 4

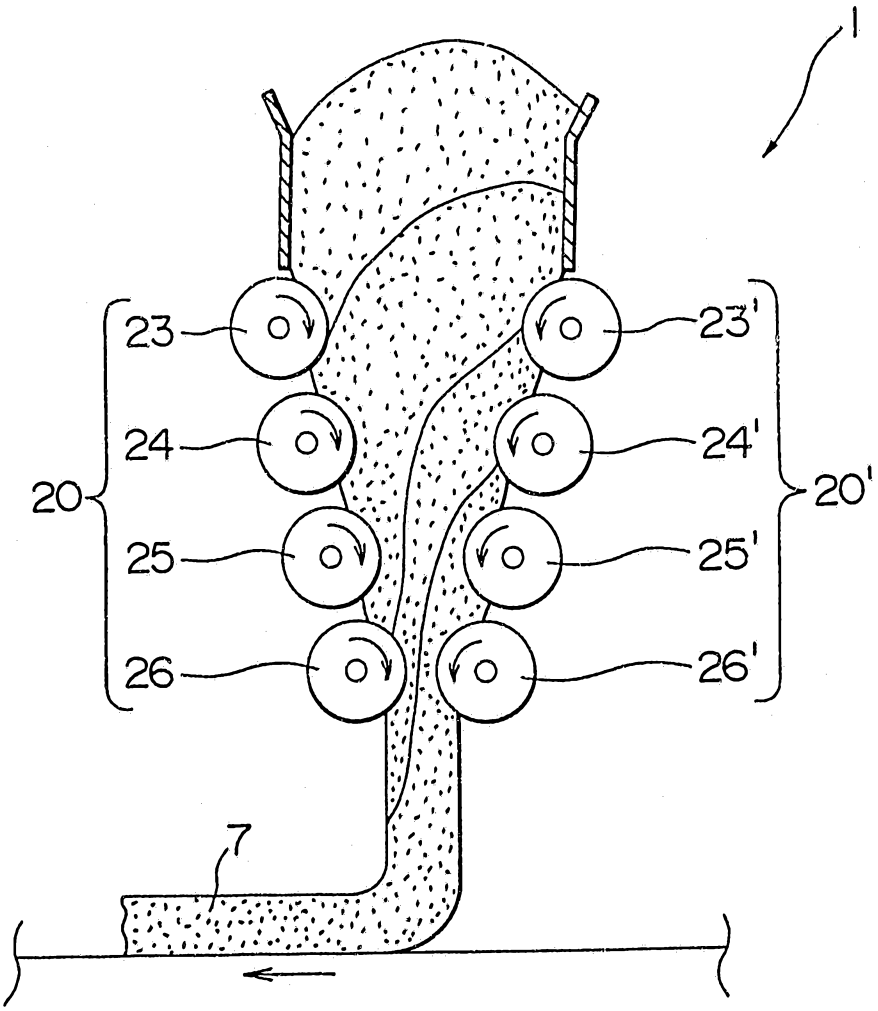

FIG. 5

