No. 757,194. PATENTED APR. 12, 1904.

H. J. HUENING.

SECTIONAL FILING CABINET.

APPLICATION FILED DEC. 27, 1902.

NO MODEL.

Fig. 1.

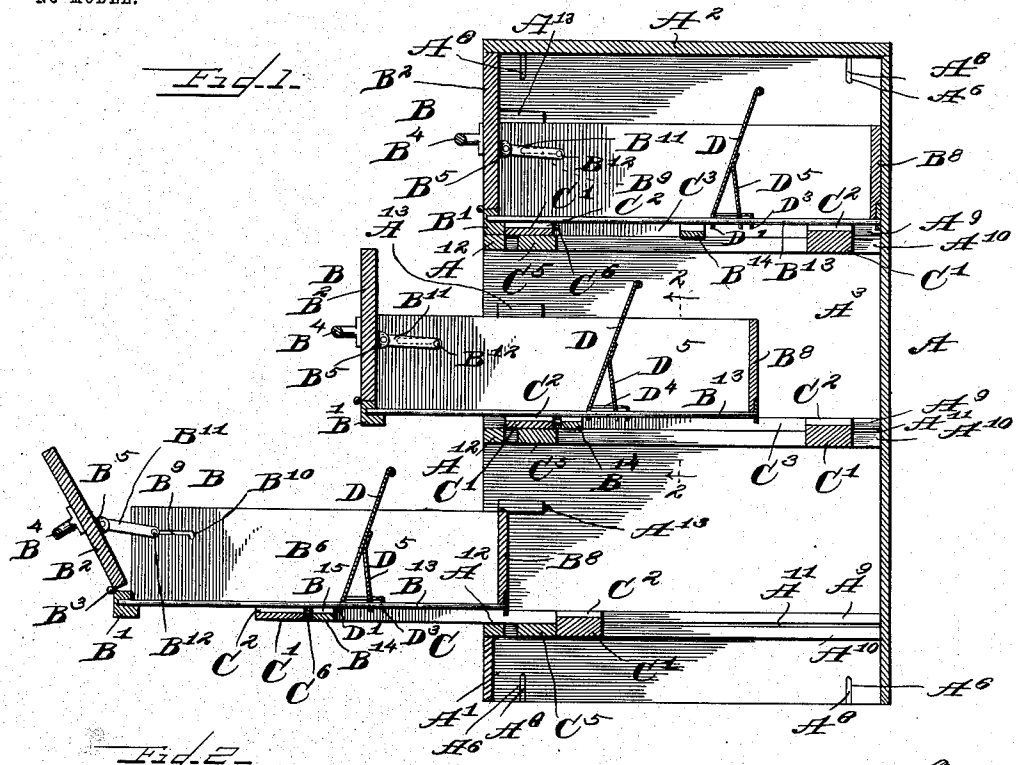

Fig. 2.

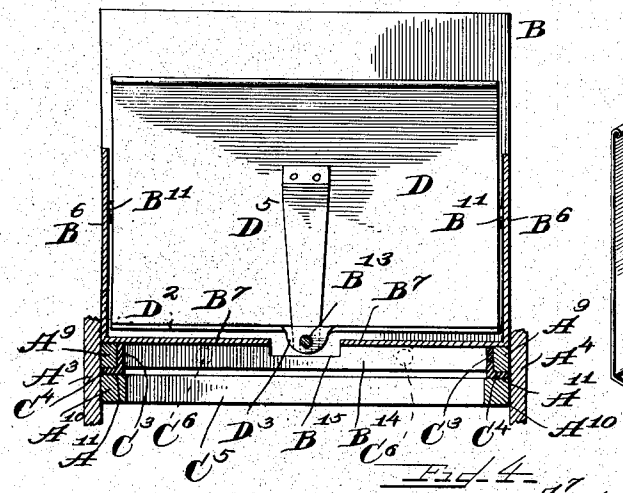

Fig. 3.

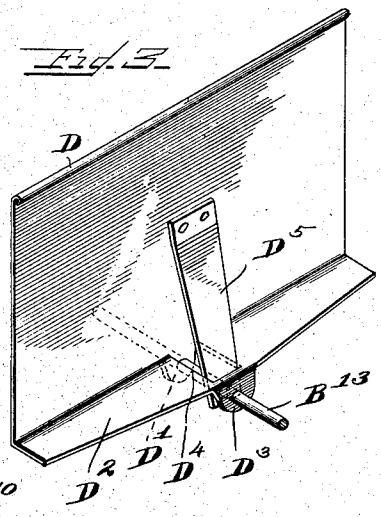

Fig. 4.

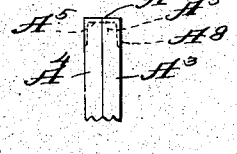

Witnesses.

Geo. L. Chindahl

Inventor.

Henry J. Huening

By Luther L. Miller

Atty.

No. 757,194. Patented April 12, 1904.

UNITED STATES PATENT OFFICE.

HENRY J. HUENING, OF CHICAGO, ILLINOIS.

SECTIONAL FILING-CABINET.

SPECIFICATION forming part of Letters Patent No. 757,194, dated April 12, 1904.

Application filed December 27, 1902. Serial No. 136,809. (No model.)

To all whom it may concern:

Be it known that I, HENRY J. HUENING, a citizen of the United States, residing at Chicago, in the county of Cook and State of Illinois, have invented certain new and useful Improvements in Sectional Filing-Cabinets, of which the following is a specification.

One of the objects of this invention is the production of a novel drawer for filing-cabinets.

A further object of the invention is the provision of improved means for slidably supporting said drawer within the cabinet.

The invention also refers to various other and further improvements to be hereinafter described.

In the accompanying drawings, Figure 1 is a vertical central sectional view through one of the sections of my improved filing-cabinet. Fig. 2 is a sectional view, on an enlarged scale, taken on dotted line 2 2 of Fig. 1. Fig. 3 is a perspective view of a follower for the drawers of this cabinet. Fig. 4 is a fragmental view illustrating a means for uniting adjacent cabinet-sections.

In the construction of a sectional filing-cabinet embodying the features of my invention I provide the supporting structures or cabinet-sections A of any desirable height and width and provided with any suitable base portion A′ and top A^2, said top being removable for a purpose to appear later herein. Each of these sections A also comprises side walls A^3 and A^4. In order to secure sections A to each other side by side, I form in the upper and lower edges of the side walls A^3 and A^4 and near the front and rear ends thereof grooves or channels A^5, each of which grooves coincides with a similar groove A^6 in the inner face of the wall, within which grooves lie integral clamping-yokes, the middle portion A^7 of each of said yokes lying in the groove A^5 and the arms or side members A^8 thereof being forced into the grooves A^6 in the walls of adjacent sections A. The top A^2 is removed to permit the insertion of these clamping-yokes at the upper ends of adjacent sections A, said top being replaced and suitably secured in position when the clamping-yokes have been forced into their grooves. In this manner any desired number of sections may be connected side by side.

At suitable intervals upon the inner face of each of the side walls A^3 and A^4 are fixed pairs of guide-bars A^9 and A^{10}, each pair of bars forming between them a groove A^{11}, for a purpose which will hereinafter appear. Bars A^{12} extend across the forward side of each section A from the wall A^3 to the wall A^4 to close the space which would otherwise appear between the drawers of the sections.

Each section A of the cabinet is adapted to contain one or more filing-drawers B, arranged to slide upon the bars A^9, each of which drawers I have shown as having in this instance a wooden front and rear end and sheet-metal sides and bottom, the front comprising a fixed portion B′ and a drop-front B^2, pivotally connected to said fixed portion by means of the hinges B^3. The drop-front B^2 has fixed upon its outer face a handle B^4, and upon its inner face near each of its side edges said drop-front bears an ear B^5, for a purpose to be hereinafter mentioned. The sides and bottom of the drawer are formed of two pieces of sheet metal, each bent to form a side B^6 and a portion B^7 of the bottom, to the rear ends of which sides and bottom portions is secured in any suitable manner the wooden end B^8. Each of the sides B^6 has near its forward end an elongated slot B^9, extending longitudinally of said side and having at its inner end a pocket B^{10}. A link B^{11} is pivotally connected at one of its ends to each of the ears B^5 and has at its opposite end a stud B^{12}, adapted to slide within the slot B^9 and lie in the pocket B^{10}. The stud B^{12} when resting within the pocket B^{10} tends to hold the drop-front B^2 in its upright closed position, a pull upon the drop-front being sufficient, however, to withdraw said stud from the pocket. The length of the slot B^9 forms a limit for the downward pivotal movement of the drop-front B^2. A space is provided between the adjacent edges of the bottom portions B^7 of the drawer to receive the locking-rod B^{13} and the downwardly-projecting portions of the follower, to be hereinafter described. This locking-rod B^{13} is secured at its forward end to the fixed portion B′ of the

drawer-front and at its rear end to the end B^8 of the drawer. A stop-bar B^{14}, extending transversely of the drawer beneath the bottom thereof, has a recess B^{15} at a point coinciding with the space between the adjacent edges of the bottom portions B^7.

In order that the drawers B may be almost wholly withdrawn from the cabinet to give free access to their contents, I provide for each drawer a slide-frame C, comprising the transverse end pieces C′, recessed in their upper faces at C^2 to coincide with the space between the adjacent edges of the bottom portions B^7 and the longitudinal side members C^3, formed of channel-iron, one web, C^4, of each of said channel-irons lying within the slot or space A^{11} between the bars A^9 and A^{10}, which bars guide and support said slide-frame C. Extending across the front of the section immediately behind each of the bars A^{12} is a stop-bar C^5, adapted to be engaged by the rear end piece C′ of the slide-frame C to limit the forward movement of the latter. The front end piece C′ is adapted to be engaged by the stop-bar B^{14} of the drawer B to limit the forward movement of said drawer with reference to the slide-frame C, rubber buffers C^6 upon the inner face of said end piece C′ cushioning any shock occasioned by the engagement of said end piece and said stop-bar.

Each drawer B is provided with a follower D, which in this embodiment of my invention is represented as being formed of sheet metal. An integral ear D′ extends downwardly from the body portion of the follower D and is perforated to receive the locking-rod B^{13}. At its lower edge the follower D has a base D^2, formed integral with said follower, said base being provided with an integral downwardly-extending ear D^3, perforated to receive the locking-rod B^{13}, said base also having an opening D^4 for the reception of the end of a locking-spring D^5, secured to the rear side of the follower D. This locking-spring D^5 is forked at its lower end to engage the locking-rod B^{13}, the tendency of said locking-spring being to tilt the follower bodily forward, thereby binding the locking-rod within the perforation of the ear D^3 and locking the follower in position upon said rod.

When it is desired to examine or change the contents of a drawer, the handle B^4 is grasped and the drawer pulled forward upon the guide-bars A^9 and the slide-frame C, the drop-front B^2 moving forward and downward upon the hinges B^3, and thereby facilitating the inspection of files within the drawer. Continued outward movement of the drawer brings the stop-bar B^{14} upon the under side of the drawer in contact with the front end piece C′ of the slide-frame, causing said frame to move forward upon the guide-bars A^9 and A^{10} until its rear end piece C′ engages the stop-bar C^5 near the forward side of the section. The drawer is now almost wholly withdrawn from the cabinet and, if desired, may be lifted from its slide-frame C and removed from said cabinet.

I am aware that various changes might be made in the construction herein shown without departing from the spirit and scope of my invention. Hence I desire to have it understood that I do not limit myself to the specific details herein illustrated and described.

I claim as my invention—

1. In a cabinet, in combination, two side walls; a pair of guide-bars on the inner face of each of said side walls, each pair of guide-bars forming between them a groove; and a slide-frame comprising two side members formed of channel-iron, one web of each of said channel-irons being adapted to slide within the groove formed between said guide-bars.

2. In a cabinet, in combination, two side walls; a pair of guide-bars on the inner face of each of said side walls, each pair of guide-bars forming between them a groove; a slide-frame comprising two side members formed of channel-iron, one web of each of said channel-irons being adapted to slide within the groove formed between said guide-bars; a drawer loosely supported by said slide-frame and having a stop-bar adapted to engage a portion of said slide-frame; and a stop-bar in said cabinet adapted to be engaged by a portion of said slide-frame.

3. In a drawer, in combination, a forward end; a rear end; two sides and a bottom composed of two pieces of sheet metal, each bent to form a side and a portion of the bottom, a space being provided between the adjacent edges of the portions forming the bottom; and a locking-rod secured at its ends in said forward end and rear end and lying in the open space in said bottom.

4. In a drawer, in combination, a forward end comprising a fixed portion and a drop-front pivotally connected with said fixed portion; two sides, one of which is provided with a slot; a link pivotally connected with said drop-front and having a stud adapted to slide within said slot, the length of said slot forming a limit for the downward pivotal movement of said drop-front; a locking-rod secured within the drawer; and a follower movably mounted upon said locking-rod.

HENRY J. HUENING.

Witnesses:
L. L. MILLER,
GEO. L. CHINDAHL.