March 1, 1927. 1,619,278

J. M. TRAVIS

BEVERAGE DISPENSING APPARATUS

Filed Aug. 6, 1926 2 Sheets-Sheet 1

Fig. 1.

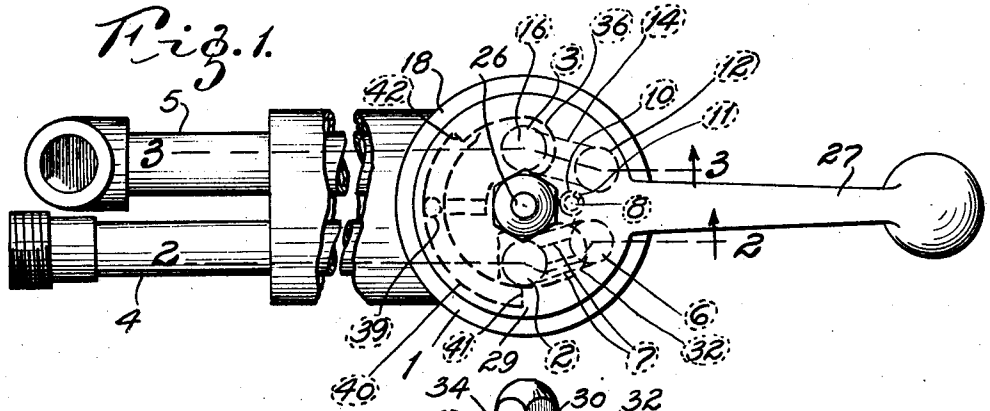


Fig. 2.

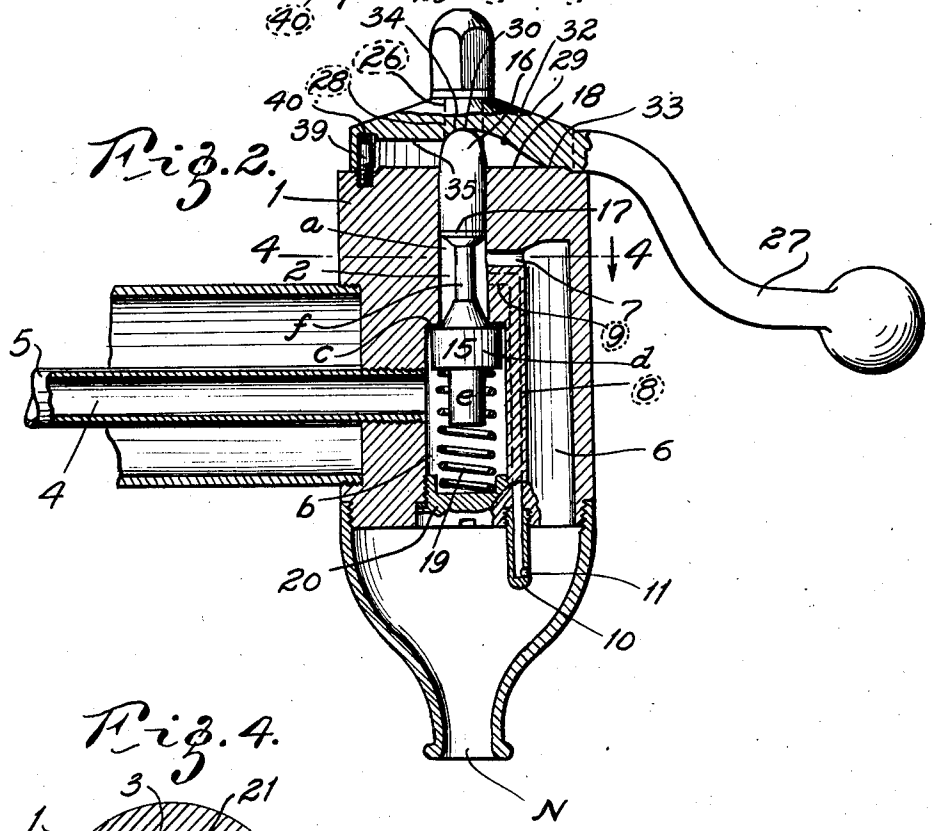


Fig. 4.

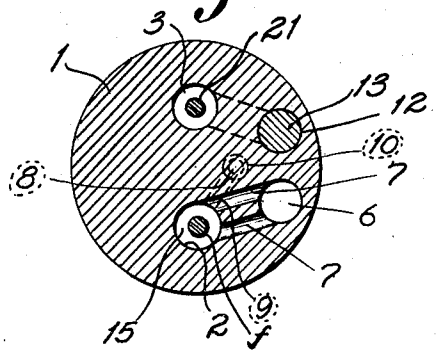


INVENTOR:
JOHN M. TRAVIS.

BY Harry A. Barnes
ATTORNEY.

March 1, 1927. 1,619,278

J. M. TRAVIS

BEVERAGE DISPENSING APPARATUS

Filed Aug. 6, 1926 2 Sheets-Sheet 2

Fig. 3.

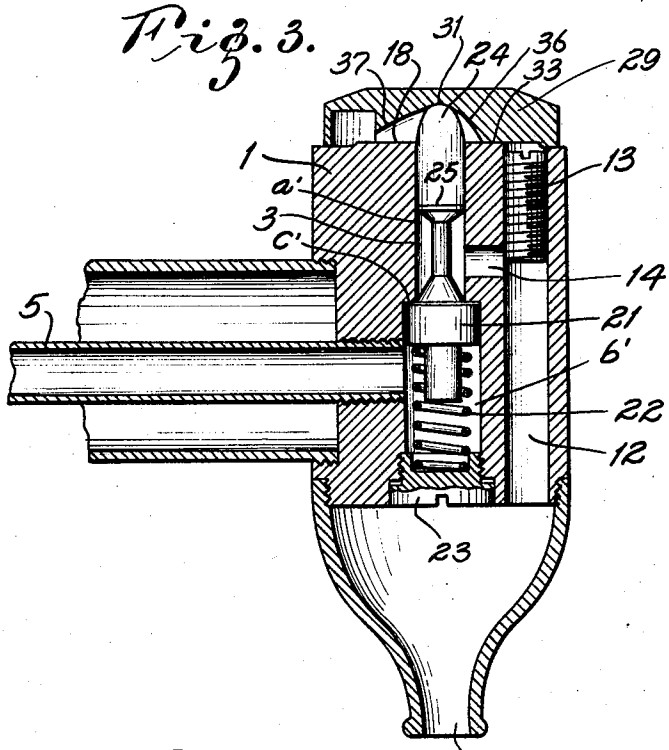


Fig. 5.

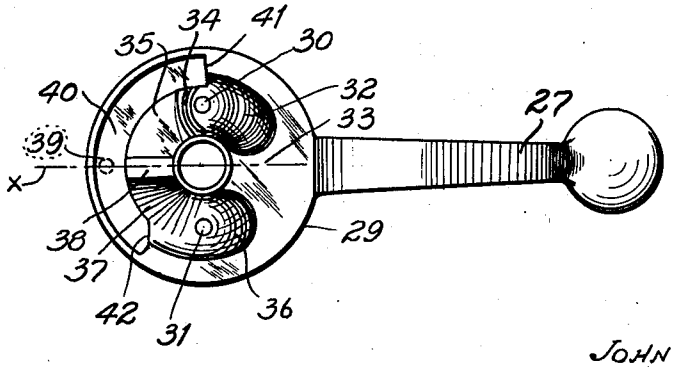


INVENTOR
JOHN M. TRAVIS.

BY Harry A. Banner
ATTORNEY.

Patented Mar. 1, 1927. 1,619,278

# UNITED STATES PATENT OFFICE.

JOHN M. TRAVIS, OF ST. LOUIS, MISSOURI.

## BEVERAGE-DISPENSING APPARATUS.

Application filed August 6, 1926. Serial No. 127,619.

My invention has relation to improvements in faucets of the duplex type, that is, those having capacity to discharge two different fluids at the same time, said fluids being commingled and mixed in the nozzle of the faucet.

The present faucet is more particularly for use on beverage dispensing fixtures from which a finished drink consisting of a syrup flavoring and carbonated water are dispensed. This general type of faucet is old, but so far as I am aware, is capable of dispensing but a plain mixture of syrup and carbonated water, there being for this purpose but one water port and one syrup port. The present invention embodies a water port and a syrup port and in addition thereto, an auxiliary water port for admitting a fine stream of carbonated water which on commingling with the syrup, produces a foamy or frothy drink preferred by some people. On the other hand, if it is desired, a coarse stream of water may be admitted to the faucet nozzle with the syrup for producing a flat drink, that is, one having but little foam. These results are obtained by a proper manipulation of the faucet handle as will be more fully apparent, together with the other advantages of the invention, from a detailed description thereof in connection with the accompanying drawings, in which:—

Fig. 1 represents a plan view of my improved faucet with parts of the connections thereto broken away; Fig. 2 is a vertical longitudinal section taken on the line 2—2 of Fig. 1; Fig. 3 is a vertical, longitudinal section taken on the line 3—3 of Fig. 1; Fig. 4 is a horizontal, transverse section taken on the line 4—4 of Fig. 2; and Fig. 5 is a bottom plan of a faucet handle showing the cam formations for actuating the water and syrup valves.

Referring to the drawings, 1 represents a casing in which are symmetrically disposed a water valve chamber 2 and a syrup valve chamber 3, the upper part *a* of said chamber 2 being of a smaller bore than the lower part *b*, there being thus formed a shoulder *c* at about the middle of the chamber 2. The syrup valve chamber 3 is similarly formed, having its upper part *a'* smaller than its lower part *b'*, and a shoulder *c'* at the juncture of the bores *a'* and *b'*. A pipe 4 is screw-threaded into the casing 1 so as to communicate with the enlarged part *b* of valve chamber 2 and a pipe 5 is screw-threaded into said casing so as to communicate with the enlarged part *b'* of syrup valve chamber 3, the pipe 4 leading to the carbonated water supply and the pipe 5 leading to the syrup supply.

The casing 1 is provided with a water port 6 on the same side with the valve chamber 2, said port 6 communicating with the part *a* of chamber 2 by means of a plurality of transverse passageways 7. Alongside the port 6 is an auxiliary port 8 of small diameter, said port 8 also communicating with the chamber *a* by means of a transverse passageway 9 disposed in a plane below the passageway 7, and a nozzle 10 is screwed into the lower end of the auxiliary port 8, said nozzle having a small aperture 11 in its lower extremity. The casing 1 is also provided with a syrup port 12 adjacent to the valve chamber 3, said syrup port extending entirely through the casing and being closed at the upper end by a syrup gage screw 13 which is adapted to be screwed inwardly or outwardly to control the amount of passageway 14 that communicates with port 12, said passageway 14 also communicating with the port *a'* of valve chamber 3.

A valve 15 is disposed in the chamber 2, said valve comprising a cylindrical part *d* from which extends downwardly a reduced portion *e* and upwardly a reduced portion *f*. A valve tip 16 is disposed in the part *a* of chamber 2, said tip bearing against a gasket 17 disposed between the tip and the upper end of valve portion *f*, the rounded nose of the valve tip 16 projecting upward beyond the top surface 18 of casing 1. A spring 19 is coiled about the stem *e* and is held in the part *b* of chamber 2 by a screw plug 20, said spring exerting its tension to maintain the cylindrical part *d* of the valve (which is the valve proper) against the shoulder *c*, thus shutting off communication between the parts *b* and *a* of the chamber 2. This is the closed position of the valve and in this position it will be noted the passageway 7 leading to port 6 is slightly below the gasket 17, the passageway 9 leading to port 8 being below the passageway 7 so that a partial movement of the valve 15 downwardly is possible to unseat the valve proper *d* without closing the passageway 7 and a further movement of the valve downwardly will shut off the passageway 7 from communication with the part *a* of chamber 2.

Within the valve chamber 3 is a valve 21 shaped similarly to valve 15 and a spring 22 is held in the part $b'$ of chamber 3 by a plug 23, said spring operating to maintain the valve on the shoulder $c'$ unless its tension is overcome. Valve 21 is also provided with a valve tip 24, the rounded nose of which extends above the top surface 18 of casing 1 and by referring to Fig. 3, it will be seen that the gasket 25 is capable of its maximum downward movement without closing off the passageway 14 leading from the part $a'$ of chamber 3 to syrup port 12. Thus, for any amount of downward movement of the valve 21, the valve will be unseated and allow free communication between the part $b'$ of chamber 3 and port 12.

By referring to Fig. 4, it will be seen that the port 8 is in close proximity to the syrup port 12 and if the nozzle 10 is turned to the proper position, the aperture 11 will point directly at the port 12 so that when carbonated water is discharged from said aperture, it will be projected into the stream issuing from port 12, thus churning up the syrup which together with the velocity of the stream of carbonated water issuing from said aperture, produces a frothy drink.

A stud 26 projects upwardly from the center of the top surface 18 of casing 1 and has a handle 27 mounted for rotation upon it, the stud passing through an opening 28 in the cam disc 29 of the handle, a nut being screwed over the extremity of the stud 26 to hold the handle in place. On the inside of the disc 29 there are oppositely disposed depressions 30, 31 to receive the valve caps 16 and 24 when the handle 27 is in its normal position, that is, the position in which the faucet valves are closed. An inclined arcuate cam surface 32 extends from the depression 30 around toward the center line $x$ of the handle where said cam surface merges with the innermost surface 33 of the cam disc 29. Extending from the depression 30 in the opposite direction to the cam surface 32, is a cam surface 34 merging with plane surface 35 some distance inwardly from the surface 33 so that the rise of the cam surface 34 is considerably less than the rise of cam surface 32. An inclined arcuate cam surface 36 extends from depression 31 in a direction toward the cam surface 32 and merges with the plane surface 33 while a cam surface 37 extends from the depression 31 in a direction opposite to cam surface 36, the cam surface 37 merging with a plane surface 38 in the same plane with surface 33. Consequently, when the handle 27 is rotated to cause valve tip 16 to ride upon inclined surface 32, the valve will be depressed to its greatest extent and will close passageway 7, but if the handle 27 is rotated in the opposite direction, the valve tip 16 will ride upon the cam surface 34 and the valve will be slightly depressed so as not to cover the passageway 7. Since the depths of cam surface 36 and 37 are the same, the valve 21 will be depressed the same amount for either direction of rotation of the handle 27. In order to arrest the movement of the handle 27, confining said movement between the limits necessary to effect the operation of valves as described, a stop pin 39 projects upwardly from the casing 1, said pin being located on the center line $x$ of the handle when the handle is in its normal position, but riding in the arcuate depression 40 to encounter either end wall 41 or 42 of the depression 40 depending upon which direction the handle is rotated.

It will be seen that with a movement of the handle 27 in one direction, the valve 15 will be partially depressed and the valve 21 will be fully depressed causing a stream of syrup and carbonated water to pour from the nozzle N of the faucet; while if the handle is rotated in the opposite direction, the valves 15 and 21 will both be fully depressed causing a flow of syrup and a fine stream of carbonated water to be projected through the syrup stream and a foamy mixture discharged from the nozzle N.

Having described my invention, I claim:

1. A faucet comprising a casing, said casing having a syrup port and a water port, a source of syrup supply and a source of water supply, a valve chamber disposed between the syrup supply and port and a valve chamber between the water supply and port, valves in said chambers for controlling the fluid flow to said ports, an auxiliary water port, and means for actuating said valves to simultaneously open communication between the fluid sources and ports or between syrup source and port, and water source and auxiliary water port.

2. A faucet comprising a casing, said casing having a syrup port and a water port, a source of syrup supply and a source of water supply, a valve chamber disposed between the syrup supply and port and a valve chamber between the water supply and port, valves in said chambers for controlling the fluid flow to said ports, an auxiliary water port, a handle mounted on said casing and adapted to be moved in a given direction to actuate the valves for opening communication between the fluid sources and ports, said handle being adapted for movement in the opposite direction for opening communication between the syrup source and port and water source and auxiliary water port.

3. A faucet comprising a casing, said casing having a syrup port, a water port, and an auxiliary water port, a source of syrup supply adapted to communicate with the syrup port, and a source of water supply adapted to communicate with the water port and auxiliary water port, a pair

of valves normally closing communication between said sources of supply and ports, a handle on said casing, said handle being movable in one direction for actuating the valves to establish communication between the ports and sources of supply, and movable in the opposite direction to close communication between water supply and water port and establish communication between water supply and auxiliary water port.

4. A faucet comprising a casing, said casing having a syrup port and a water port, a source of syrup supply and a source of water supply, a valve chamber disposed between the syrup supply and port and a valve chamber between the water supply and port, valves in said chambers for controlling the fluid flow to said ports, an auxiliary water port, a passageway leading from the syrup port to its valve chamber, vertically spaced passageways leading from the water port and auxiliary water port respectively to the water valve chamber, a handle movable in a given direction to unseat the valves and open communication between the water and syrup ports and their sources of supply, said handle being movable in the opposite direction to close off the passageway leading from the water port to the water valve chamber, the passageway to the auxiliary water port remaining open.

5. A faucet comprising a casing having valve controlled syrup and water ports and an auxiliary water port, and a handle on said casing movable in a certain direction for opening the valves controlling the supply to said ports, said handle being movable in an opposite direction for closing the supply to the water port while the supply to the syrup and auxiliary water ports is unaffected.

6. A faucet comprising a casing, said casing having a syrup port, a water port, and an auxiliary water port, a source of syrup supply adapted to communicate with the syrup port, and a source of water supply adapted to communicate with the water port and auxiliary water port, a pair of plunger valves normally closing communication between said sources of supply and ports, a handle on said casing, cam formations on said handle operable on the valves to open communication between the ports and sources of supply with a movement of the handle in a given direction, said cam formations operating to close communication between the water source and water port with a movement in an opposite direction, the communication between syrup source and port and water source and auxiliary port remaining open.

7. A faucet comprising a casing having valve controlled syrup and water ports and an auxiliary water port, and a handle on said casing movable in a certain direction for opening the valves controlling the supply to said syrup and water ports, said handle being movable in an opposite direction for controlling the supply to the syrup and auxiliary water ports.

In testimony whereof I hereunto affix my signature.

JOHN M. TRAVIS.