Jan. 18, 1949. C. G. SOLANA ET AL 2,459,396

FLOCKING DEVICE

Filed June 7, 1945 2 Sheets-Sheet 1

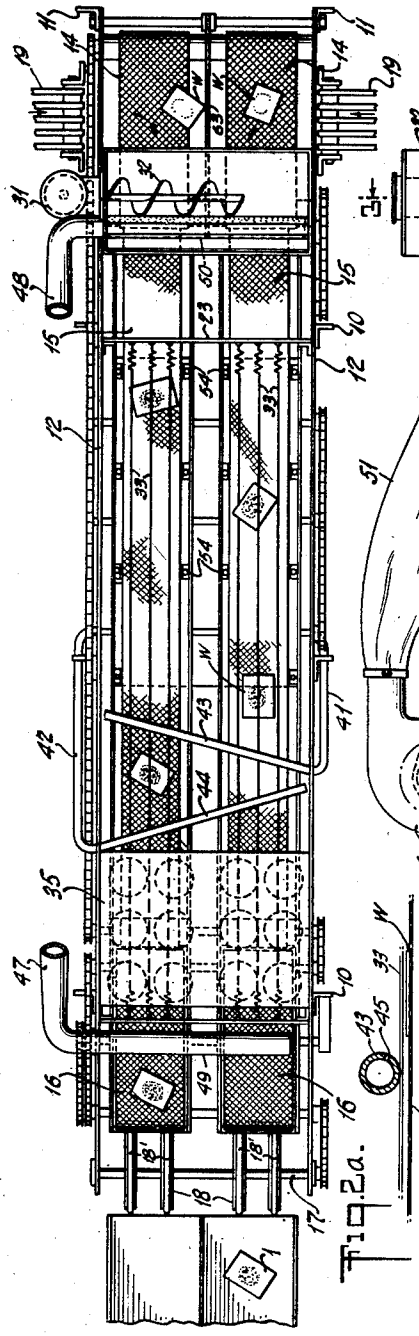

Fig. 1.

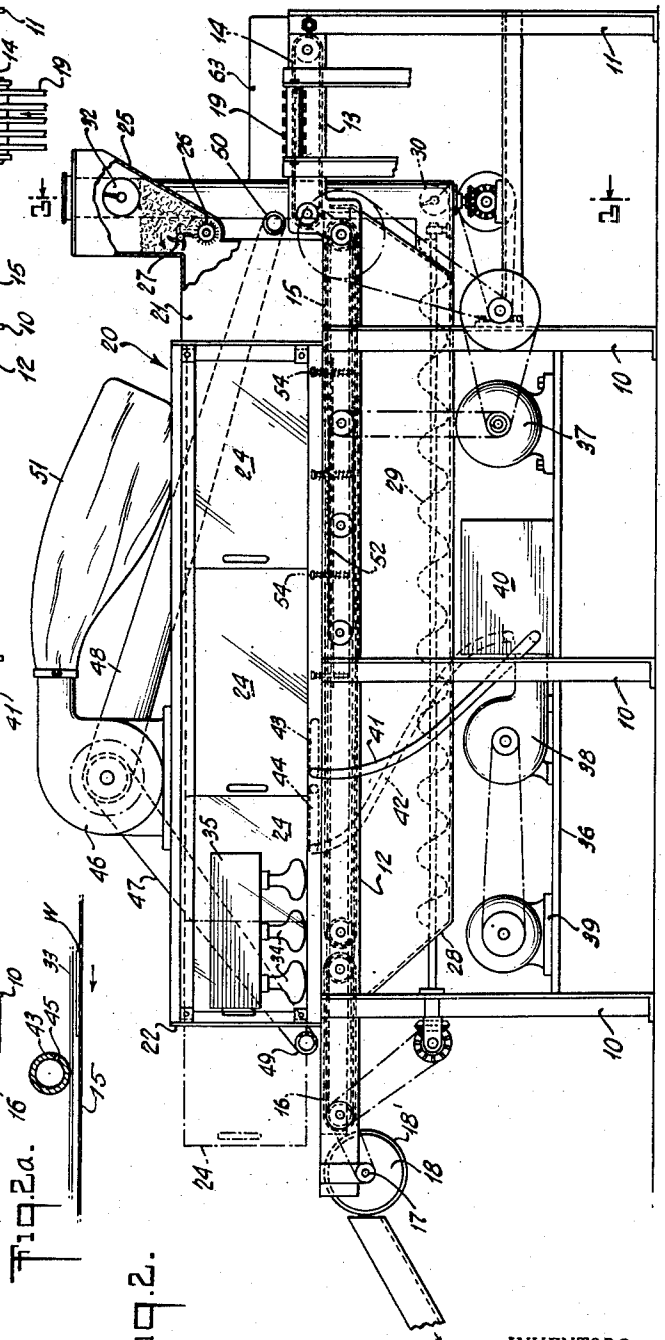

Fig. 2.

Fig. 2a.

INVENTORS.
CARLOS G. SOLANA.
JOSEPH CASINGENA.

BY

ATTORNEY.

Jan. 18, 1949. C. G. SOLANA ET AL 2,459,396

FLOCKING DEVICE

Filed June 7, 1945 2 Sheets-Sheet 2

Fig. 4.

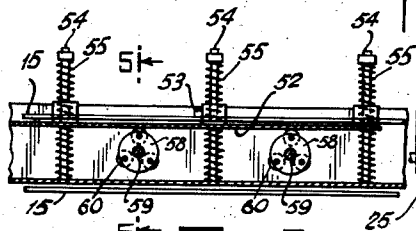

Fig. 5.

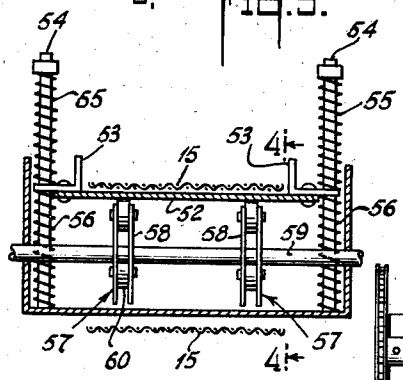

Fig. 6.

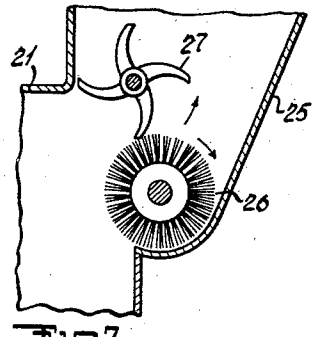

Fig. 7.

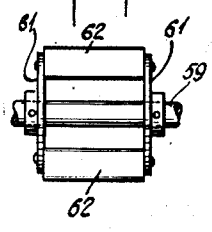

Fig. 8.

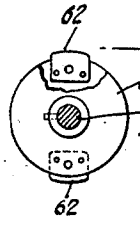

Fig. 3.

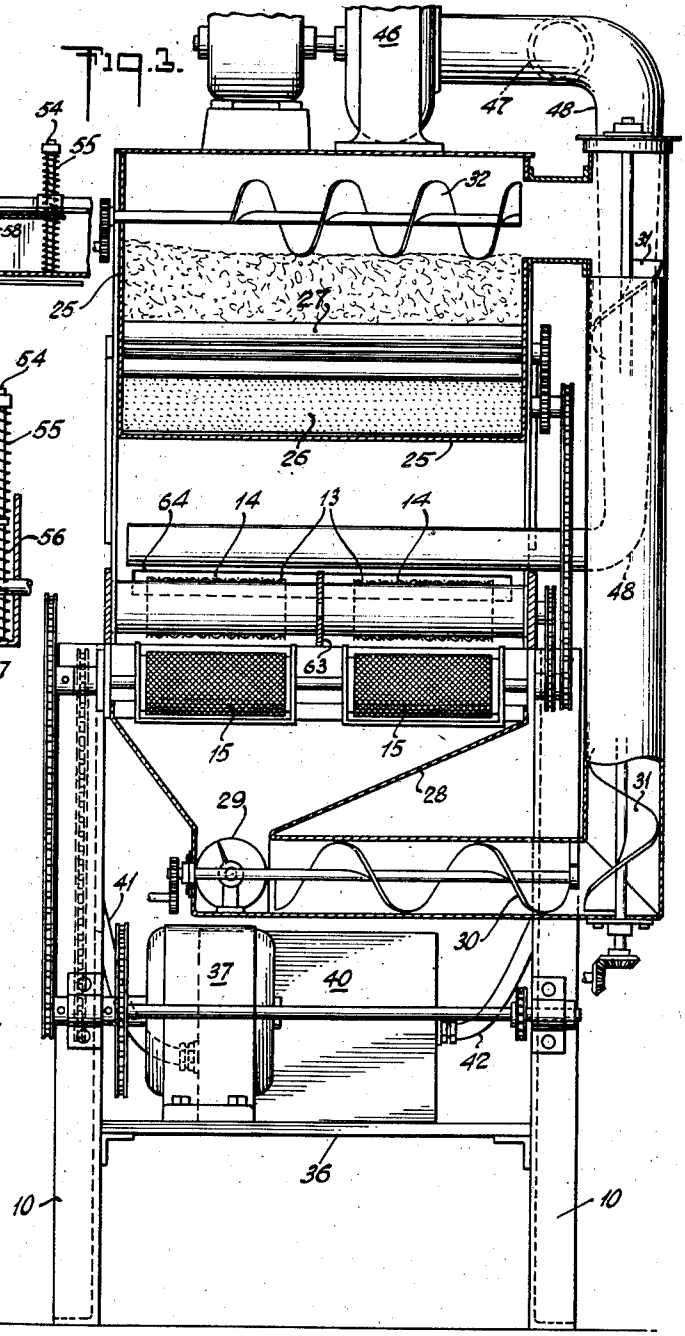

INVENTORS.
CARLOS G. SOLANA.
JOSEPH CASINGENA.

BY

ATTORNEY.

Patented Jan. 18, 1949

2,459,396

UNITED STATES PATENT OFFICE

2,459,396

FLOCKING DEVICE

Carlos G. Solana, Brooklyn, and Joseph Casingena, New York, N. Y., assignors to Herbert B. Levine, New York, N. Y.

Application June 7, 1945, Serial No. 598,082

9 Claims. (Cl. 91—8)

1

The present invention relates generally to the art of flocking, and specifically to devices for practicing that art.

The term "flocking" is known in the art as a procedure whereby the properties or the appearance, or both, of a "backing," such as paper, fabric or other material become enhanced or ornamented by the application thereto and the permanent association therewith of various substances, called "flock." Such substances may be either of a purely utilitarian nature, to provide, for instance, protective, wear-resisting or fireproofing layers over the backing, or having ornamental qualities adapted to supply attractiveness to the backing.

Both the utilitarian and ornamental types of flock may vary in specific weight or possess different physical structures, and the method of applying flock to a backing is largely governed by the weight and the structural properties of the flock. When, for instance, relatively heavy, flaky, granulated or otherwise coarse or solid flock particles are to be employed, their application to the backing requires a procedure substantially different from that pursued when fibrous, fluffy, finely powdered or otherwise specifically light-weight flock material is to be processed.

The flocking operation generally consists of providing the backing or the work to be treated with a wet coating of an adhesive substance, applying to the coated surface the desired flock material and drying the adhesive and thus binding the flock material with the work.

In order to completely and evenly cover the coated work surface by flock material and to effect a durable bond between the flock and the backing, the distribution of flock over the work must be uniform and its application must be sufficiently forceful, especially when light-weight flock is used, to assure its penetration into the adhesive coating.

The above prerequisites for producing satisfactory "flocking" may be readily attained by a skilled operator who carefully applies adhesive to the work, evenly distributes flock over the coated surface portion and so manipulates the work, while continuing the application of flock, that the flock material becomes forcibly imbedded in the adhesive, whereupon the latter is permitted to dry. Evidently such procedure necessitates individual handling of the work, consumes time and is too costly for modern requirements.

A more specific object of this invention is to provide an apparatus designed for a continuous

2

flocking process, wherein adhesive-coated backing or work elements are moved through the entire length of the device in an endless succession, while being subjected to the different stages required to effect perfect flocking results.

Another object of this invention is to provide a flocking apparatus having a work-receiving belt, a work-conveying belt and a work-delivery belt, wherein the entire work-conveying belt and a portion of the work-delivery belt operate within an enclosure, and wherein one end of the enclosure serves as flock-applying and flock-distributing chamber, while in the major portion of the enclosure are located means for forcibly uniting flock with the adhesive coating of the work and other means for drying the coating before the work leaves the enclosure.

Another object of this invention is to provide in a device indicated means cooperating with the work-delivery belt for speedily discharging finished work to preclude its jamming at the delivery end.

A further object of this invention is the provision of specific means for assuring uniform distribution of flock over the work in that a maximum amount of flock is applied to the entire adhesive-coated portion of the work substantially at the same time.

Still another object of this invention is the provision of work guards resiliently mounted above and slightly spaced from the upper run of the work-conveying belt.

Another object of the present invention is to provide a multiple vibratory mechanism beneath the upper run of the work-conveying belt in such a manner that a substantial portion of the belt becomes directly supported by the mechanism and is caused to glide over the latter while being successively subjected to violent shocks imparted thereto at spaced intervals by the mechanism.

A still further object of the present invention is to provide within the enclosure of the device means for the forcible removal, at at least two successive stages, of excess flock from the treated work by subjecting it to a restricted fluttering movement between the work-conveying belt and the guard means disposed above the latter, before subjecting the flock-retaining adhesive coating of the work to a rapid drying procedure, preparatory to discharging the work from the device.

Still another object of this invention is to so construct and arrange the various elements of the device that all surplus flock removed from the work may be gathered and conveyed to the flock applying instrumentalities for repeated use

in connection with new work entering the apparatus.

Another object of this invention is the provision of means at both the entrance and the exit of the work for absorbing loose particles of flock which may either adhere to the belts or otherwise leave the enclosure.

The foregoing and numerous other important objects and advantages of the present invention will become more readily understood from the following description of the device as illustrated in a more or less diagrammatical form in the accompanying drawings, which latter, although disclosing specific constructions, are by no means intended to restrict this invention to the several arrangements shown, and wherein:

Fig. 1 is a top view of the device in its presently preferred form, with some of the upper portions removed;

Fig. 2 is a side elevation of the apparatus with a portion of the hopper side removed;

Fig. 2*a* is an enlarged sectional detail illustration of a compressed air manifold;

Fig. 3 is an enlarged sectional view taken on lines 3—3 of Fig. 2;

Fig. 4 is a fragmental side elevation, partially in section, of a portion of the vibrator arrangement taken on line 4—4 of Fig. 5;

Fig. 5 is a typical vertical cross section through the work conveyer belt and the vibrator arrangement;

Fig. 6 is a partial, enlarged detail view of the flock discharge mechanism employed in the hopper;

Fig. 7 is an elevation of a modified vibrator element; and

Fig. 8 is a side view thereof with a portion removed.

Referring now specifically to the drawings, and especially to Figs. 1, 2 and 3, there is disclosed a frame for the apparatus supported by upright legs 10 and 11, made preferably of angle iron. The upper ends of the legs support side stringers 12, to which are secured the bearings for the roller shafts driving the different conveyer belts employed in the device. It will be observed that legs 11 are somewhat higher than legs 10 and that the stringer 12 is elevated at the end connected to legs 11, as indicated at 13, see Fig. 2.

Lodged within the elevated portion 13 of the stringer are the roller shafts of the work-reception belts 14, while between the lower stringer sections are lodged the roller shafts of work-conveyer belts 15 and the work-discharge belts 16. Also mounted from the stringers is shaft 17 supporting a plurality of work discharge discs or rollers 18.

Directed towards the work-reception belts 14, but not connected otherwise with the device, are work delivery belts 19 propelling work at right angles to the travel of the belts employed in the device. Arranged above stringers 12 is an enclosure 20 composed of a short section 21 and a longer section 22, as seen in Fig. 2, and which sections are separated by a partition 23 shown in Fig. 1. The longer section is preferably provided with transparent and removable side panels 24. Extending from the upper right-hand end of short section 21 is a hopper 25 for the reception of flock. At the lower or discharge end of the hopper there is arranged a rotary brush 26 and an agitator 27, which two instrumentalities cooperate with one another in that the brush operates in clockwise direction, whereas the agitator moves in counter-clockwise direction and is

intended to stir the flock and propel it against the brush, while the latter discharges flock over the work-conveyer belts and thereby over the work carried by the belts. The direction of discharge of the flock from the hopper is towards partition 23, which latter prevents the discharged flock from entering the larger compartment in any other way except by way of the work-conveyer belts.

Beneath the entire length of the work-conveyer belts 15 and a portion of work-discharge belts 16, there is provided a bin 28, at the bottom of which is arranged a screw conveyer 29 adapted to move surplus or excess flock towards an intermediate horizontal screw conveyer 30, and from there to a vertical conveyer 31 and from there to a horizontal conveyer 32, the latter being operative within hopper 25 and being adapted to distribute flock over substantially the entire length of the hopper.

Arranged above work-conveyers 15 and extending throughout the entire length of the longer enclosure section are work guards 33 supported at both ends by sufficiently strong springs to hold the guards taut. At the left-hand end of the enclosure there is provided a battery of infrared heat lamps 34 suspended from a box-like structure 35 which is intended to be bodily removable from the enclosure.

Upon a shelf 36 disposed below bin 28 there is arranged a motor 37 for driving the belts, the discharge mechanism for the hopper and the screw conveyers delivering the flock from the bin to the hopper. On the same shelf there is also supported a blower 38 driven by motor 39, which blower is connected with a pressure chamber 40 from which pipes 41 and 42 deliver air pressure to manifolds 43 and 44, respectively, and which manifolds are disposed above guard wires 33 and have perforations 45 directed at an angle toward the work indicated at "W," see Fig. 2*a*. The position of the manifolds is such that they are disposed at different angles in respect to the progress of the work, as can be clearly observed from Fig. 1.

Supported on top of the longer section of the enclosure is an exhaust blower 46 from which extend conduits 47 and 48 terminating, respectively, in suction manifolds 49 and 50. These manifolds are located at both ends of the enclosure just above the belts and are intended to absorb any stray, floating flock which may be carried to without the enclosure. The flock thus sucked up is collected in a removal bag 51 also arranged above the enclosure.

Referring now to Figs. 4, 5, 7 and 8, illustrating the mechanism for imparting vibration to the work by way of vibrating the upper run of the work-conveyer belts, the arrangement consists of relatively thin, flexible sheets of metal 52 being resiliently supported by way of marginally attached angle irons 53 which are perforated and are movable upon pins 54 between coil springs 55 and 56 disposed above and below the flanges of angles 53. These springs are adapted to floatingly suspend sheets 52. The work-conveying belts being supported at no other place except at their ends by the rollers driving them, the upper run of the work-conveyers are caused to sag against sheets 52 and rest upon them while moving towards the discharge belts. The weight of the upper runs of conveyers 15 is sufficient to depress sheets 52 so that the latter are caused to rest against vibrators 57. These vibrators consist of two parallel discs 58 mounted on a shaft

59 and between each pair of discs there are provided rollers 60.

Another preferred form of the vibrators is illustrated in Figs. 7 and 8. In this arrangement shaft 59 supports a pair of spaced discs 61 between which are fixedly held bumper blocks 62, preferably disposed diametrically opposite to one another.

In the drawings it will be observed that the device illustrated comprises two sets of reception, work-conveying and discharge belts. The reception belts are separated by a partition 63, which latter is intended to deflect pre-prepared work supplied from delivery belts 19. Obviously the device may be provided with either one set of belts only, or may be constructed to accommodate more than two belt sets without changing the principle employed in processing the "work." It will be also noted that the reception belts are elevated in respect to the work-conveyer belts so that the "work" is caused to drop onto the work-conveyer belts, at which moment the work assumes an angular position relative to the belt surface and receives flock dispensed from hopper 25 at a steep angle. As the work recovers its horizontal position, additional flock strikes it both vertically and angularly from an opposite direction, that is when flock is reflected from partition 23.

Operation

The "work" indicated by the letter "W" is shown, for the purpose of simplicity, in the shape of rectangular pieces of material, such as paper. The "work" is pre-processed in that a coating of adhesive is applied to one surface thereof. From the device applying such adhesive, not shown, the "work" travels upon delivery belts 19 to reception belts 14, partition 63 deflecting the "work" to cause it to travel upon the reception belts. These belts being elevated, the "work" drops onto the work-conveyer belts 15 through an appropriate slot 64 provided in the end wall of short enclosure section 21, see Fig. 3. As the "work" thus assumes an inclined position flock material issuing from the hopper settles upon the "work" at an angle in one direction. Additional flock is received upon the "work" in the manner stated above. Now the "work" passes under partition 23 and travels upon the conveyer belts and beneath guard wires 33. As soon as the "work" passes partition 23, separating the smaller section from the longer section of the enclosure 20, the upper run of the work-conveyers are subjected to a very vigorous vibration by plates 52 upon which the belts rest. This vibratory movement is supplied by the rotary vibrators beneath sheets 52. This vibration continues during the travel of the "work" from partition 23 to about the middle of the enclosure section 22 at which point the "work" ceases to vibrate as it clears vibrating plates 52.

During the vibratory motion imparted to the "work" through the conveyer belt the flock material is so-to-speak pounded onto the "work" and is caused to imbed itself in the adhesive applied to the upper work surface.

Now all loose particles of the flock which do not firmly adhere to the "work" are removed in two stages. First a strong, finely diffused blast of air is directed against the "work" opposite and angularly to the direction of progress of the "work." The first air blast issues from manifold 43. Due to the fact that the "work" travels upon

the belt and beneath guard wire 33, the "work" is subjected to a fluttering movement adapted to shake off all surplus flock.

A second blast of finely diffused air, directed at a different bias and in opposite direction to the progress of the "work," strikes the "work" from manifold 44. This second application of compressed air is intended to blow off any particles of flock which may still adhere to the "work." It will be observed that the position of manifolds 43 and 44 are just opposite to one another so that the blasts from these manifolds are directed at opposite angles. The blast from manifold 44 is also intended to partially dry the adhesive coating, or at least prepare it for the next step to which the "work" is subjected, that is rapid, artificial drying. This drying is accomplished by the battery of infra-red lights disposed in groups of six or more above the end portions of the work-conveyer belts and of the work discharge belts, both of which portions are located within longer section 22 of the enclosure.

The drying procedure is so speedy that when the "work" leaves the enclosure its adhesive coating is sufficiently dry to permit safe stacking of the "work" without fear of displacing the applied flock. In order to facilitate a quick disposal of the processed "work," its removal from the discharge belts is hastened by the employment of discharge discs 18. These discs operate at a much quicker speed than discharge belts 16. Their construction provides a disc proper with a peripheral friction band 18', which latter engages the work under-surface and propels the work rapidly into the chutes adjacent to the discs.

It is to be noted that flock discharging from hopper 25 and the agitation of the flock by the vibratory arrangement as well as by the compressed air manifolds will cause fine particles of flock to penetrate to without enclosure 20 at both ends thereof. For this purpose suction manifolds 49 and 50 are provided above the discharge belts as well as at the entrance of the "work" into the enclosure. These manifolds are intended to absorb all floating flock and to discharge it through exhaust blower 46 into bag 51.

All flock removed from the work by the vibratory arrangement and by the compressed air manifolds is caused to fall through the wire mesh of the belts into bin 28 from where it is transported through a system of screw conveyers back to hopper 25. Thus all excess flock gathered during the process of applying flock to the work may be re-used, whereby not only a considerable saving of flock is accomplished, but also the dissipation of flock to without the device is prevented.

While the accompanying illustrations and their description disclose specific forms of the device, it is obvious that changes and improvements may be made therein, without departing from the basic principle of the present invention, as defined in the annexed claims.

We claim:

1. In a flocking device, a reception belt, a conveyer and a discharge belt, a single source of power driving these belts and the conveyer, a hopper above the end of the conveyer nearest to said reception belt, a substantially closed compartment arranged over the end portion of the conveyer beneath the hopper and including the hopper discharge end, a substantially sealed, elongated enclosure extending over the rest of the conveyer and forming a continuation of said compartment, a wall separating the latter from said enclosure, a vibrator strip resiliently suspended

beneath and in cooperative position with the top run of the conveyer, a plurality of spaced vibrators actuating said strip, a heat source within the enclosure disposed over the top run of the conveyer portion nearest to said discharge belt, a plurality of discharge rollers operating at a speed greater than that of the discharge belt arranged at the latter's delivery end, a plurality of work guard members extending over the conveyer, at least two compressed air manifolds disposed above said guard members at angular relation to each other and having discharge ports arranged at an angle to the conveyer and being adapted to discharge air in a direction opposite to the progress of the work, suction manifolds at both ends of the conveyer, a bin beneath the conveyer, and means for transporting flock from the bin to the hopper.

2. In a flocking device, as per claim 1, the discharge end of the hopper comprising a substantially cylindrical brush operating in one direction, and an agitator mounted above and being in coaction with said brush and operating in opposite direction.

3. In a flocking device, a reception belt, a work conveyer, work guards disposed above the conveyer, a work discharge belt and work discharge rollers, a continuous enclosure covering the upper run of the work conveyer and comprising a short and a longer section, the latter having transparent, removable side panels, said short section being divided from the longer section by a deflector wall extending across said work conveyer, a hopper for the reception of flock arranged at the end and above said short section, a mechanized discharge end for said hopper; vibratory means arranged beneath, and work guards and work heating means disposed above the upper run of the work conveyer, a bin beneath the entire work conveyer for the reception of excess flock, a plurality of cooperating spiral conveyers for moving flock from the bin to said hopper, a plurality of compressed air manifolds arranged above said work guards, and suction manifolds disposed at the receiving end of the work conveyer and above the work discharge belt.

4. In a flocking device, as per claim 3, said mechanized discharge end for the hopper comprising a cylindrical rotary brush adapted to distribute flock over the top run of the work conveyer in the direction toward said deflector wall, and a flock agitator cooperating with the rotary brush and being adapted to keep the flock in motion and even distribution above the brush.

5. In a device for the purpose indicated, a work-receiving belt disposed in a substantially horizontal plane, a work-conveying belt with an enclosure over its entire upper run disposed in a plane lower than that of the work-receiving belt, and a work-discharge belt in the plane of the work-conveying belt, a vibratory sheet beneath that upper run portion of the conveyer belt which is in near adjacency to said work-receiving belt, said vibratory sheet serving for vibrating said upper run portion, thus causing the moving work supported thereon to vibrate.

6. In a flocking apparatus, a plurality of individually operated endless belts including, in order, work-receiving, work-conveying and work-discharging belts, an enclosure mounted over the entire upper runs of the work-conveying belts and over the upper runs of the work-discharging belts, the enclosure being composed of a short and a longer section separated by a solid partition, the longer section having transparent, movable side panels, a battery of heating units within the longer section and extending over the end areas of the work-conveying and work-discharging belts, a hopper at the shorter section, a brush and agitator mechanism for ejecting flock from the hopper onto the work carried by the conveying belts, a vibratory mechanism disposed beneath that portion of the upper runs of the work-conveying belts which is beneath the longer enclosure section adjacent the short section, a bin for surplus flock beneath the enclosed belt portions, a spiral conveyer system for transporting surplus flock from the bin to the hopper, resiliently suspended work guards extending over the upper runs of the belts within the enclosure, compressed air manifolds arranged above said work guards, and suction manifolds disposed above the belts exteriorly to said enclosure.

7. In a flocking apparatus, as per claim 6, said belts being made of wire mesh, said vibratory mechanism comprising sheet elements suspended and held in floating position by lower and upper spiral springs mounted about stationary pins, a plurality of vibratory members rotatably mounted beneath and in engagement with said sheet elements, said work-conveying belts being mounted on end rollers remote from the ends of the sheet elements so that the upper runs of the belts are caused to glide over and to rest upon said sheet elements, while the latter are being subjected to vibrations by said vibratory members.

8. In a flocking apparatus, as per claim 6, a plurality of work-discharge rollers cooperating with said work-discharging belts and comprising discs having peripheral friction bands, the peripheral speed of the discs being substantially greater than that of the work-discharging belts.

9. In a flocking apparatus, as per claim 6, a motor for actuating said belts, said vibratory mechanism, said work-discharge rollers, said brush and agitator mechanism for the hopper and said spiral conveyer system, another motor for operating an air compressor feeding the compressed air manifolds, and a third motor supplying power to a suction blower serving said suction manifolds.

CARLOS G. SOLANA.
JOSEPH CASINGENA.

REFERENCES CITED

The following references are of record in the file of this patent:

UNITED STATES PATENTS

Number	Name	Date
1,283,155	Goldhamer	Oct. 29, 1918
1,304,362	Panoulias	May 20, 1919
1,445,550	Perkins	Feb. 13, 1923
1,883,535	Burnett	Oct. 18, 1932
1,930,814	Lipsius	Oct. 17, 1933
2,220,921	Thompson	Nov. 12, 1940